B.C.E. ELECTRONICS

GSEE TECH

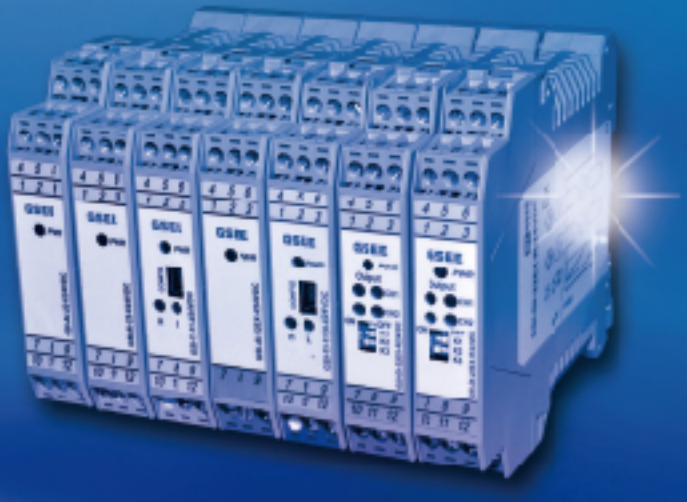

Industrial interface

GSEE TECH

Company Profile

Tianjin Geneuo Technology Co., Ltd. specializes in the development, production and sales of industrial automation products, system integration and engineering service.

● Communication solution

-Industry EtherNET Switch

-Fieldbus modules: ProfiNET, EtherNET/IP, EtherCAT, MODBUS TCP/IP I/O modules

● Inductive sensors

-Different housing design are available:M5 to M80 and cubic

● Optimized connection technology for efficient automation

-M5 to M40 receptacle, pre-moulding cable, field wireable connectivity

-Passive junction box and splitters

-Industrial network connectors for ProfiNET, EtherNET/IP, EtherCAT, MODBUS TCP/IP,Profibus,DeviceN-ET,CC-link.

● LED lighting

- Machine station lighting
- Factory lighting
- Intelligent lighting solutions

Geneuo exceptionally large product portfolio does not only cover all relevant standard solutions but also the special requirements of individual industries. The products and the total solution have been widely used in automotive, iron & steel, machine tool, elevator, textile, packaging, rubber machine etc.

B.C.E. ELECTRONICS
Importation & Distribution Electronic Components

B.C.E. s.r.l.
Via Regina Pacis, 54/c - 41049 SASSUOLO (MO) Italy
Tel. +39 0536 811.616 r.a. - Fax +39 0536 811.500
www.bce.it - E-mail: bce@bce.it

SYSTEM CERTIFICATION ISO 9001 SGS

Contents

GSI series isolators

GSI series isolated barriers

GSI Series Rotation Rate Monitor

GSI Series Surge Protectors

MPU power supply

Index

Induction of types

GSI	–	AI	–	11EX	–	I	/	24VDC
1		2		3		4		5

1
GSI
Series

2
Input Signal
AI - Analog Input
AO - Analog Output
DI - Digital Input
DO - Digital Output
RI - Input PT100 RTD
TI - Input TC

3
Frist Fig. - Channal QTY
Secend Fig. - Output QTY
With EX - Isolated Barrier
Without EX - Isolator

4
Output Signal
I - Current Output
U - Voltage Output
R - Relay Output
T - Transistor Output
H - HART Protocol

5
Power Supply
24VDC
None - Loop Powered

B.C.E. S.r.l. Via Regina Pacis, 54/c - I 41049 Sassuolo (MO)
Tel.: (+39) 0536 811616 - Fax.: (+39) 0536 811500 e-mail: bce@bce.it - Website: www.bce.it

GSI series Signal Isolator is a kind of electrical device that connected between the field instruments and control room. The isolator could effectively solve the interference from the field industrial automation control system, through the reliable isolation among the power supply, input and output, to ensure that the system could work stably and reliably. As a universal device, isolator has a varies of functions, such as isolation, conversion, distribution, and alarm in automation control system.

Product Features

Power supply: Independent, Loop power supply

Channal QYT: 1 in 1 out, 1 in 2 outs, 2 ins 2 outs

Function: field instruments supply, transmission of signal isolated, signal conversion, distribution, alarm settings

Input signal: Thermocouples, Thermal resistances, Potentiometers, mV、V、mA、TTL、OC gate、Dry contacts, Inductive sensors, Frequency signal, Communication signal

Output signal: mV, V, mA, Transistors, Relay, TTL, Communication signal

Technical Parameters

Power supply protection: Protect the product form reverse supply voltge destroy

Dielectric strength: 1500V,a.c.;1min

Electromagnetic compatibility: accord with GB/T 18268 (equivalent to IEC 61326-1)

Electrostatic: discharge 8kV in air

Pulse group: between power supply part and the ground (2kV) , between the signal part and the ground (1kV)

Surge: between the line and the ground (2kV) , between the line and line (1kV)

Radio frequency: 10V/m

Environment: The air should not contain any medium corrupting the coat of chrome, nickel and silver. Moreover,violent vibration and impact or any cause of electromagnetic induction (such as big current or spark,etc.) must be avoided when using.

Operating temperature: -20℃～+60℃

Relative humidity : 10%~90%

Storage conditions:

Storage temperature：-40℃～+80℃

Relative humidity : 10%~90%

Installation: Mounted on 35mm DIN guide rail

Terminal: Pluggable teminal, could connect single-stand or multiple-stand cables with a cross-section of 0.5mm^2 ～2.5mm^2

Dimensions: 114.5mm×99.0mm×17.5mm
114.5mm×99.0mm×12.5mm

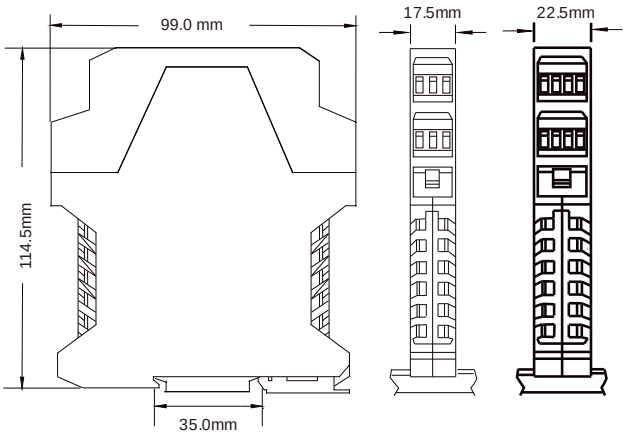

Standards and Certifications

Standards:

EN 61326：1997＋A1：1998+A2：2001+A3：2003

EN 61010-1：2001

Certification:

CE certification

Input Specification (Independent power supply type)

Category	Signal type	Range	Min. range	Transfor accuracy
Thermo couple	T	-160℃～+400℃	50℃	0.5℃/0.1%
	E	-80℃～+700℃	50℃	0.5℃/0.1%
	J	-90℃～+900℃	50℃	0.5℃/0.1%
	K	-150℃～+1372℃	50℃	0.5℃/0.1%
	N	-200℃～+1300℃	50℃	0.5℃/0.1%
	R	-40℃～+1768℃	500℃	1.5℃/0.1%
	S	-40℃～+1768℃	500℃	1.5℃/0.1%
	B	+320℃～+1820℃	500℃	1.5℃/0.1%
mV		-60mV～+60mV	10mV	20μV/0.1%
		-120mV～+120mV	20mV	40μV/0.1%
Thermal resistance	Pt100	-200℃～+850℃	20℃	0.2℃/0.1%
	Cu50	-50℃～+150℃	20℃	0.2℃/0.1%
	Cu100	-50℃～+150℃	20℃	0.2℃/0.1%

Input Specification (Loop power supply type)

Category	Signal type	Range	Min. range	Transfor accuracy
Thermo couple	T	-200℃～+400℃	50℃	1℃ / 0.2%
	E	-200℃～+900℃	50℃	1℃ / 0.2%
	J	-200℃～+1200 ℃	50℃	1℃ / 0.2%
	K	-200℃～+1372℃	50℃	1℃ / 0.2%
	N	-200℃～+1300 ℃	50℃	1℃ / 0.2%
	R	0℃～+1768 ℃	500℃	3℃ / 0.2%
	S	0℃～+1768 ℃	500℃	3℃ / 0.2%
	B	+320℃～+1820 ℃	500℃	3℃ / 0.2%
mV		-10mV～+100mV	10mV	40μV / 0.2%
Thermal resistance	Pt100	-200 ℃～+850℃	20℃	0.4℃ / 0.2%
	Pt1000	-200 ℃～+250℃	20℃	0.6℃ / 0.3%
	Cu50	-50℃～+150℃	20℃	0.4℃ / 0.2%
	Cu100	-50℃～+150℃	20℃	0.4℃ / 0.2%
Thermal resistance		20Ω～400Ω	20Ω	0.2Ω / 0.2%
		20Ω～2000Ω	100Ω	2Ω / 0.2%

B.C.E. S.r.l. Via Regina Pacis, 54/c - I 41049 Sassuolo (MO) Tel.: (+39) 0536 811616 - Fax.: (+39) 0536 811500 e-mail: bce@bce.it - Website: www.bce.it

Analog isolator

Order data	Type	Type	Type
1IN/1OUT	GSI-AI-11-I/24VDC		
1IN/2OUT		GSI-AI-12-I/24VDC	
2IN/2OUT			GSI-AI-22-I/24VDC
Input			
Input channal QYT	1	1	2
Input current	4～20mA，0～20mA		
Input resistance	≤50Ω		
Available voltage / current	17.5V/20mA		
Output			
Output channal QYT	1	2	2
Output current	4 ～20mA，0～20mA，R ≤ 800Ω		
Output voltage	1～5V，2～10V，0～5V，R_L≥ 10kΩ		
General parameters			
Supply voltage	20～35V,d.c.		
Power supply protection	Protect the product form reverse supply voltge destroy		
Current consumption: (24Vdc supply,20mA signal output)	≤70mA	≤90mA	≤120mA
Transfer accuracy(20℃,4~20mA)	0.1%F.S.		
Temperature drift(-20℃~+60℃)	0.005%F.S./℃		
Response time	take 0.5ms to reach 90% of final value		
Dielectric strength (among input, output and power supply)	1500V,a.c.;1min		
Insulation resistance (among input, output and power supply)	≥ 100MΩ		
EMC	GB/T 18268（IEC 61326-1）		
Operating temperature	-20℃～+ 60℃		
Suitable apparatus	2-wire HART transmitter,3-wire transmitter,current source		
Installation	35mm DIN		
Outline dimensions	114.5mm × 99mm × 12.5mm	114.5mm × 99mm × 17.5mm	

B.C.E. S.r.l. Via Regina Pacis, 54/c - I 41049 Sassuolo (MO) Tel.: (+39) 0536 811616 - Fax.: (+39) 0536 811500 e-mail: bce@bce.it - Website: www.bce.it

Wiring diagram of analog isolator

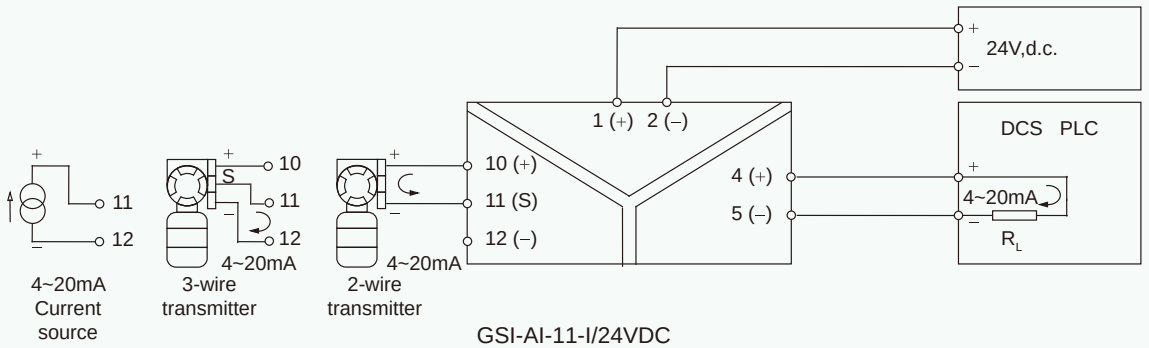

GSI-AI-11-I/24VDC

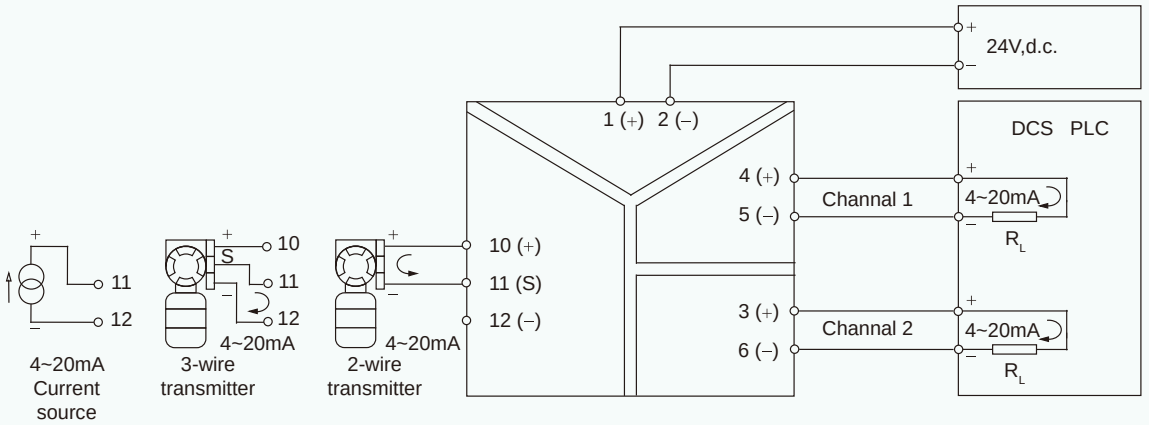

GSI-AI-12-I/24VDC

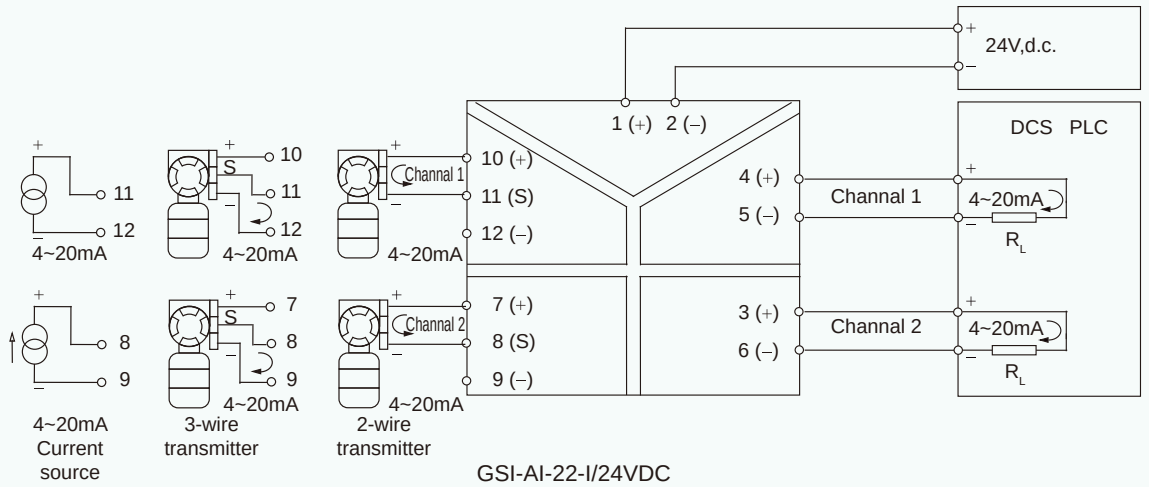

GSI-AI-22-I/24VDC

B.C.E. S.r.l. Via Regina Pacis, 54/c - I 41049 Sassuolo (MO)
Tel.: (+39) 0536 811616 - Fax.: (+39) 0536 811500
e-mail: bce@bce.it - Website: www.bce.it

RTD input isolator

Order data	Type	Type	Type
1IN/1OUT	GSI-RI-11-I/24VDC		
1IN/2OUT		GSI-RI-12-I/24VDC	
2IN/2OUT			GSI-RI-22-I/24VDC
Input			
Input channal QYT	1	1	2
Input signal type and range	Pt100 / Pt1000 / Cu50 / Cu100 （See the sheet on P03 to ccustomizate ）		
Output channal QYT	1	2	2
Output current	4 ~ 20mA , R ≤ 550Ω		
Output voltage	1 ~ 5V , R_L ≥ 300kΩ		
General parameters			
Supply voltage	20 ~ 35V,d.c.		
Power supply protection	Protect the product form reverse supply voltge destroy		
Current consumption: (24Vdc supply,20mA signal output)	≤ 70mA	≤ 90mA	≤ 120mA
Transfer accuracy(20℃,4~20mA)	0.1%F.S.		
Temperature drift(-20℃~+60℃)	0.005%F.S./ ℃		
Response time	take 0.5ms to reach 90% of final value		
Dielectric strength (among input, output and power supply)	1500V,a.c.;1min		
Insulation resistance (among input, output and power supply)	≥ 100MΩ		
EMC	GB/T 18268 (IEC 61326-1)		
Operating temperature	-20℃ ~ + 60℃		
Suitable apparatus	2-wire ,3-wire RTDS(Pt100,Cu50,Cu100)		
Installation	35mm DIN		
Outline dimensions	114.5mm × 99mm × 17.5mm		

B.C.E. S.r.l. Via Regina Pacis, 54/c - I 41049 Sassuolo (MO) Tel.: (+39) 0536 811616 - Fax.: (+39) 0536 811500 e-mail: bce@bce.it - Website: www.bce.it

Wiring diagram of RTD input isolator

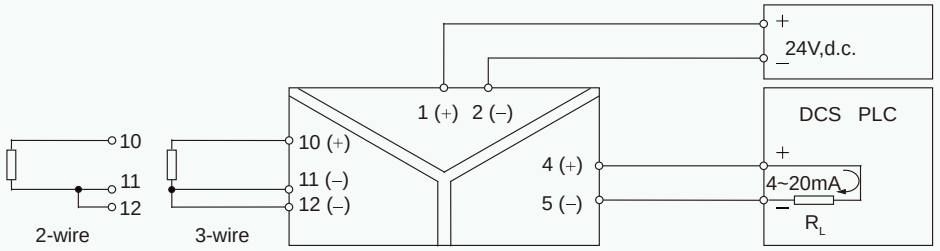

GSI-RI-11-I/24VDC

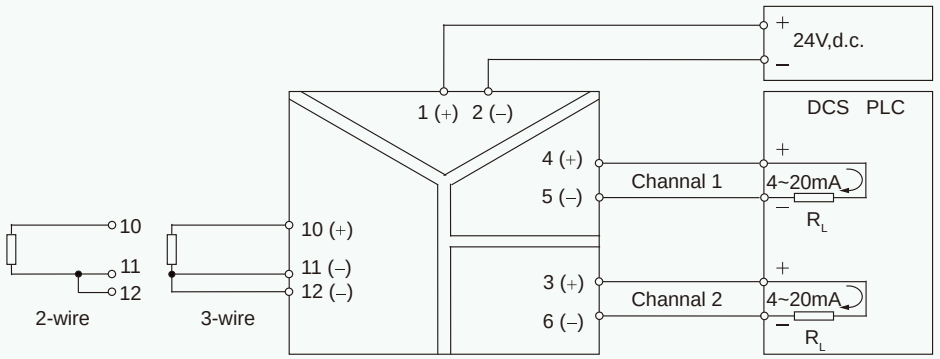

GSI-RI-12-I/24VDC

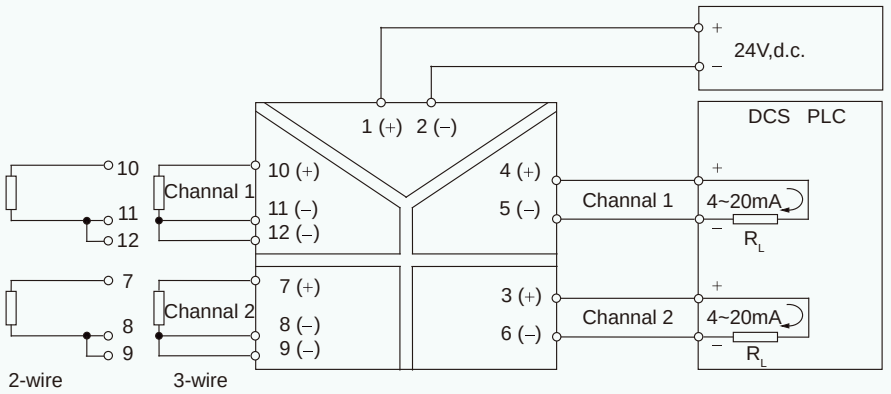

GSI-RI-22-I/24VDC

B.C.E. S.r.l. Via Regina Pacis, 54/c - I 41049 Sassuolo (MO)
Tel.: (+39) 0536 811616 - Fax.: (+39) 0536 811500
e-mail: bce@bce.it - Website: www.bce.it

TC input isolator

Order data	Type	Type	Type
1IN/1OUT	GSI-TI-11-I/24VDC		
1IN/2OUT		GSI-TI-12-I/24VDC	
2IN/2OUT			GSI-TI-22-I/24VDC
Input			
Input channal QYT	1	1	2
Input signal type and range	See the sheet on P03 (user can program)		
Cold end compensation range	-20℃ ~ +60℃		
Cold end compensation accuracy	±1℃		
Output			
Output channal QYT	1	2	2
Output current	4 ~ 20mA , R ≤ 550Ω		
Output voltage	1 ~ 5V , R_L ≥ 300kΩ		
Alarm indication	Under lower limit,LED L is flashing,output current:3.8mA; Exceed upper limit,LED H is flashing,output current:20.8mA; Input circuit open,both H and L are flashing,output current:21mA		
General parameters			
Supply voltage	20 ~ 35V,d.c.		
Power supply protection	Protect the product form reverse supply voltge destroy		
Current consumption: (24Vdc supply,20mA signal output)	≤ 50mA	≤ 75mA	≤ 120mA
Transfer accuracy(20℃,4~20mA)	T / E / J / K / N: 0.5℃/0.1% ; R / S / B:1.5℃/0.1% -60mV ~ 60mV: 20μV/0.1% ; -120mV ~ 120mV: 40μV/0.1%		
Temperature drift(-20℃~+60℃)	0.01%F.S./ ℃		
Response time	take 2ms to reach 90% of final value		
Dielectric strength (among input, output and power supply)	1500V,a.c.;1min		
Insulation resistance (among input, output and power supply)	≥ 100MΩ		
EMC	GB/T 18268 (IEC 61326-1)		
Operating temperature	-20℃ ~ + 60℃		
Suitable apparatus	T、E 、J、K、N、R、S、B and mV signal		
Installation	35mm DIN		
Outline dimensions	114.5mm × 99mm × 17.5mm		

B.C.E. S.r.l. Via Regina Pacis, 54/c - I 41049 Sassuolo (MO)
Tel.: (+39) 0536 811616 - Fax.: (+39) 0536 811500 e-mail: bce@bce.it - Website: www.bce.it

Wiring diagram of TC input isolator

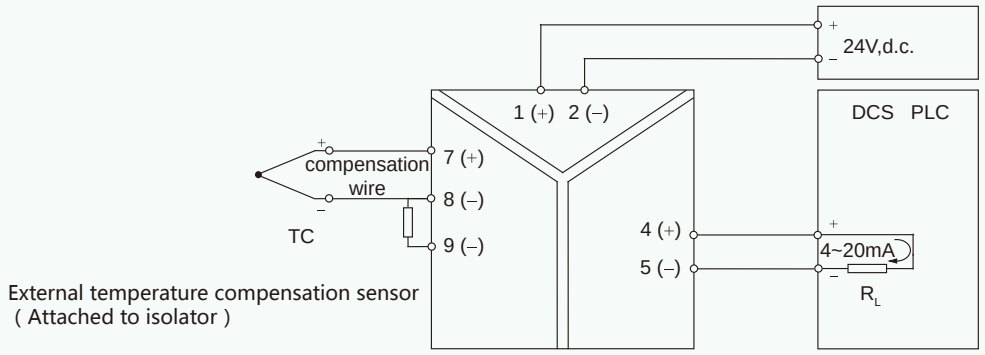

GSI-TI-11-I/24VDC

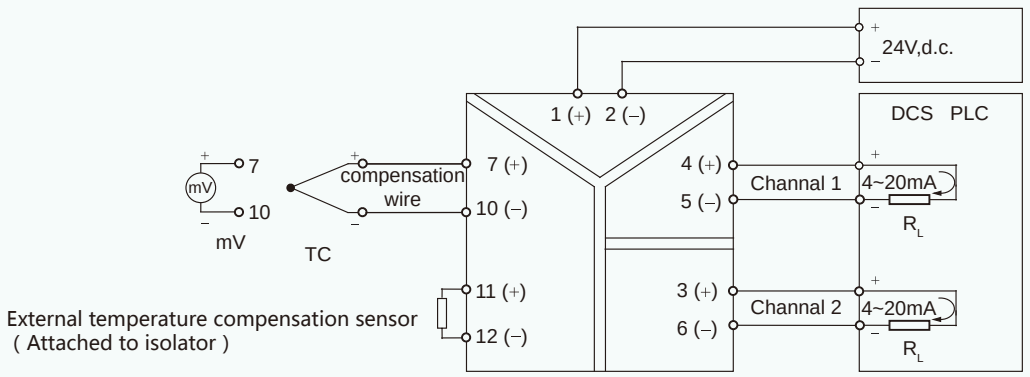

GSI-TI-12-I/24VDC

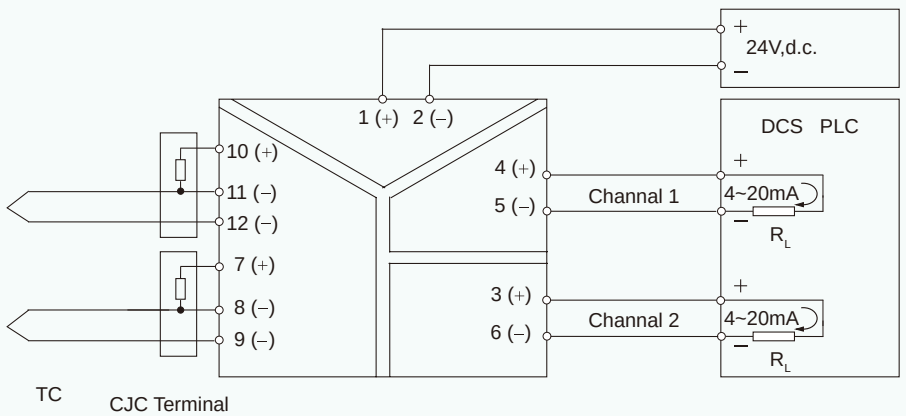

GSI-TI-22-I/24VDC

B.C.E. S.r.l. Via Regina Pacis, 54/c - I 41049 Sassuolo (MO)
Tel.: (+39) 0536 811616 - Fax.: (+39) 0536 811500
e-mail: bce@bce.it - Website: www.bce.it

GSI series Isolated barrier

GSI series Isolated barries with electromagnetic coupling function, could effectively isolate the power supply, signal input and output, which is more reliable and safe than zener barriers. And isolated barries doesn't need intrinsic safe grounding, this design enhances anti-interference ability of detection control loop.As a universal device, isolated barries could match any field intrinsic safey instruments.

Product Features

Power supply: Independent, Loop power supply

Channal QYT: 1 in 1 out, 1 in 2 out, 2 in 2 out

Function:transmission of signal isolated, transmission of signal isolated, signal conversion, distribution of signals & i-s instruments, swithes, proximity detectors inputs,i-s driving magnet valve, i-s power output of LED, input of 2 wires/ 3wires transmitter(includings HART), input/output of current&voltage signals, inputs of thermocouple, RTD.

Technical Parameter

Power supply protection: Protect the product form reverse supply voltge destroy

Safe isolation voltage: 250V,a.c.

Dielectric strength: 2500V,a.c.;1min (Between non-intrinsically safe circuit and intrinsically safe)

Electromagnetic compatibility: accord with GB/T 18268(IEC 61326-1)

Electrostatic: discharge 8kV in air

Pulse group: between power supply part and the ground (2kV)，between the signal part and the ground (1kV)

Surge: between the line and the ground (2kV)，between the line and line (1kV)

Radio frequency: 10V/m

Environment:

Mounting in non-hazardous area,and connected to the IS apparatus in zone 0 hazardous area.

Operating temperature: -20℃～+60℃

Relative humidity : 10%~90%

Storage conditions:

Storage temperature：-40℃～+80℃

Relative humidity : 10%~90%

Installation: Mounted on 35mm DIN guide rail

Terminal: Pluggable teminal, blue terminals connected to the dangous side signal， green ones to the safe side signal,could connect single-stand or multiple-stand cables with a cross-section of 0.5mm^2～2.5mm^2

Outline dimensions: 114.5mm×99.0mm×17.5mm

114.5mm×99.0mm×12.5mm

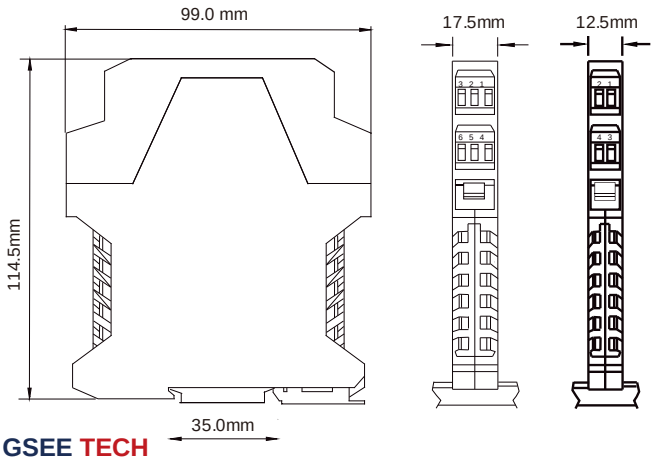

Standards and Certifications

Standards:

GB3836.1-2000: Electrical apparatus for explosive gas atmosphere Part 1: General reqirements

GB3836.4-2000： Electrical apparatus for explosive gas atmosphere Part 4: Intrinsic safety "I"

Certifications:

National Supervision and Inspection Centre for Explosion Protection and Safety of Instrumentation

China Quality Mark Certification Group "explosion-proof electrical apparatus factory quality requirement" (equivalent to IECEx 0D005)

B.C.E. S.r.l. Via Regina Pacis, 54/c - I 41049 Sassuolo (MO) Tel.: (+39) 0536 811616 - Fax.: (+39) 0536 811500 e-mail: bce@bce.it - Website: www.bce.it

GSI series Isolated barrier selection list

Instruments	Signal	Type	Channal QYT	Dangerous side	Safe side	Features	Page number
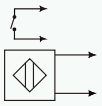	DI	GSI-DI-11EX-R/24VDC	1in/1out	Input of swithes / proximity detectors	Relay output	disconnection detection function	012
		GSI-DI-22EX-R/24VDC	2in/2out				
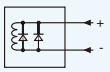	DO	GSI-DO-11EX/24VDC	1in/1out	When driving current is 45mA， output voltage is ≥12V	Dry contact input	[Ex ia] Ⅱ C loop output control	014
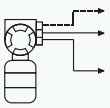	AI	GSI-AI-11EX-I/24VDC GSI-AI-11EX-U/24VDC	1in/1out	2wires/3wires transmitters power supply input	4~20mA, 1~5V output	independant power supply	016
		GSI-AI-12EX-I/24VDC	1in/2out				
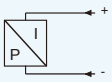	AO	GSI-AO-11EX-I/24VDC	1in/1out	4~20mA, 0~20mA output	4~20mA, 0~20mA input	independant power supply	022
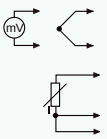	RTD TC mV R Input	GSI-RI-11EX-I/24VDC	1in/1out	2wires/3wires thermal resistance input	4~20mA, 1~5V output	independant power supply	020
		GSI-TI-22EX-I/24VDC	1in/1out	thermocouple input mV signal input			018

B.C.E. S.r.l. Via Regina Pacis, 54/c - I 41049 Sassuolo (MO)
Tel.: (+39) 0536 811616 - Fax.: (+39) 0536 811500 e-mail: bce@bce.it - Website: www.bce.it

Digital input ,relay output isolated barrier

The following isolated barriers transfer the signal of a switch or proximity detector from the hazardous area to safe area. It has selectable line fault detect facility detecting an open in the input circuit. Inputs and outputs can be set to the in-phase or reverse phase control mode. Independat power supply is needed, the power part, the input part and the output part are isolated from each other.

Order data	Type	Type
1IN/1OUT	GSI-DI-11EX-R/24VDC	
2IN/2OUT		GSI-DI-22EX-R/24VDC
Technical parameters		
Input channal QYT	1	2
Output channal QYT	1	2
Hazardous area input	Input: switch, proximity detector, Freq≤10Hz Open circuit voltage:≈ 8V Short circuit current:≈ 8mA	
Safe area output	Drive capability:250V,a.c./2A or 30V,d.c./2A Load property:resistive load Response time:≤20ms	
Input/Output characteristics (In-phase)	If input > 2.1mA, output relay is energized,with yellow LED ON. If input < 1.2mA, output relay is de-energized,with yellow LED OFF.	
Input/Output characteristics(Reverse)	Set K1、K2 on panel (please see the specification attached)	
Disconnection detection function	Set K3 on panel (please see the specification attached)	
Dielectric strength (between input, output and power supply)	2500V,a.c.;1min Switch input needs parallel a 10kΩ resistance on the ends if dectection off-state. (see switch II on page13)	
EMC	accord with GB/T 18268(IEC 61326-1)	
Operating temperature	-20℃~+60℃	
Suitable apparatus and Suitable location	Field apparunts accords to DIN19234 standard (proximity detectors, switches) (include I-S pressure switches, temperature switches, liquid level switches) 0 area, 1area, 2 area, II A, II B, II C, T4~T6 Hazardous-area	
Supply voltage	20 ~ 35V,d.c.	
Power supply protection	Protect the product form reverse supply voltge destroy	
Current consumption: (at 24Vdc supply,20mA signal output)	≤ 40mA	≤50mA
Ex certification	National Supervision and Inspection Center for Explosion Protection and Safety of Instrumentation (NEPSI)	
Ex-marking	[Ex ia]II C	
Max. voltage (Um)	250V	
Intrinsic safety parameters	Terminal (7、8) , (10、11) Uo=10.5V,Io=14mA,Po=37mW II C:Co=2.4μF,Lo=165mH; II B:Co=7.2μF,Lo=840mH; II A:Co=19.2μF,Lo=1320mH	
Installation	35mm DIN guide rail	
Outline dimensions	114.5mm × 99mm × 12.5mm	114.5mm × 99mm × 17.5mm

B.C.E. S.r.l. Via Regina Pacis, 54/c - I 41049 Sassuolo (MO) Tel.: (+39) 0536 811616 - Fax.: (+39) 0536 811500 e-mail: bce@bce.it - Website: www.bce.it

Wiring diagram of DI & Relay output isolated barrier

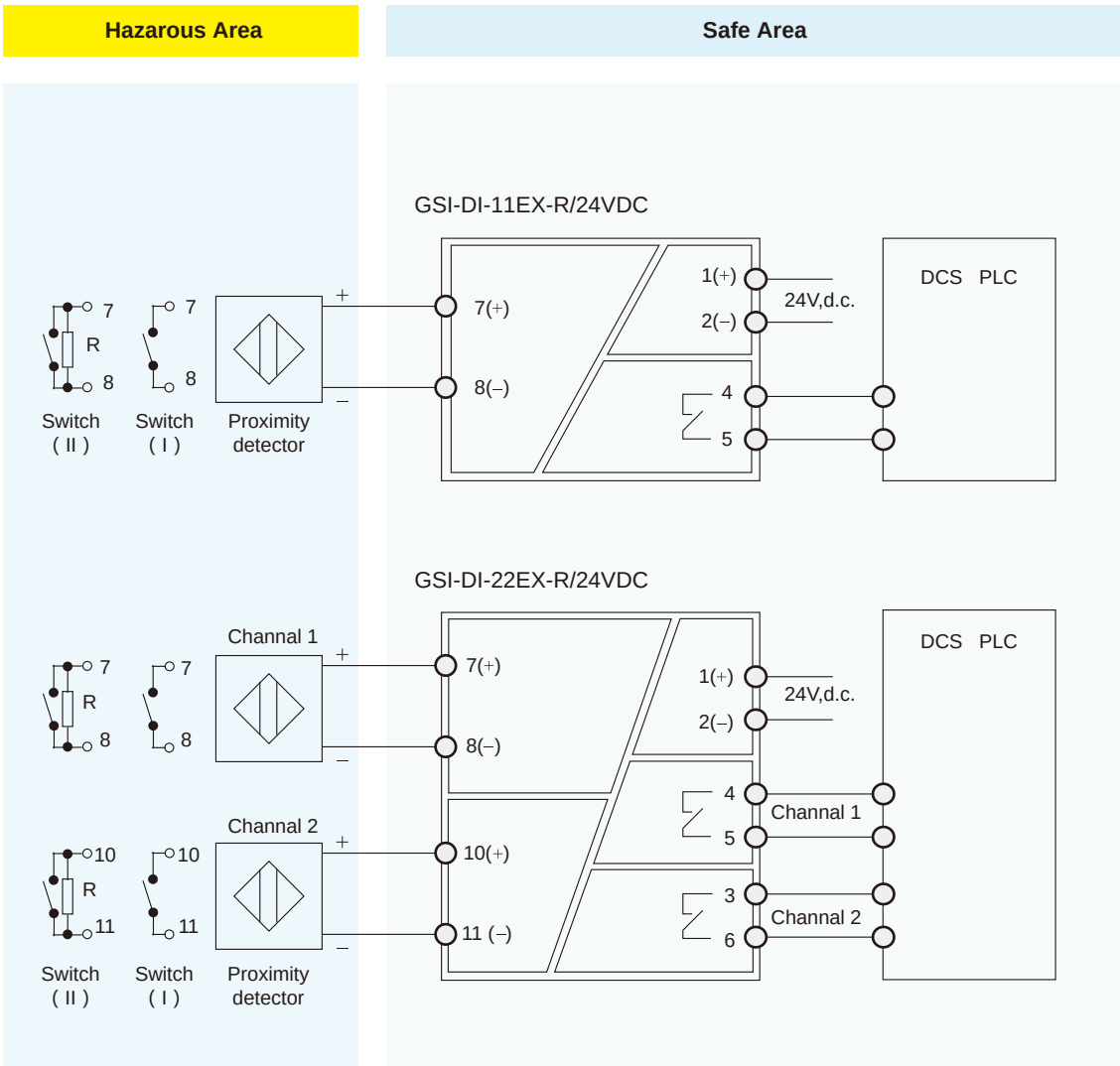

B.C.E. S.r.l. Via Regina Pacis, 54/c - I 41049 Sassuolo (MO)
Tel.: (+39) 0536 811616 - Fax.: (+39) 0536 811500
e-mail: bce@bce.it - Website: www.bce.it

DO isolated barrier

The following isolated barrie has 45mA singnal output, is a loop powered module which enables intrinsically safe devices, such as solenoid valves or alarm transmitters, and some other low-power loads, located in the hazardous area to be controlled from the safe area.The input and the output are electrically isolated from each other.Allow the control switch to connect directly to the either side of power supply circuit.

Order data	Type
1IN/1OUT	GSI-DO-11EX/24VDC
Technical parameters	
Input channal QYT	1
Output channal QYT	1
Hazardous area	Open-circuit voltage: 22V to 24V; Minimum output voltage: ≥12V at 45mA 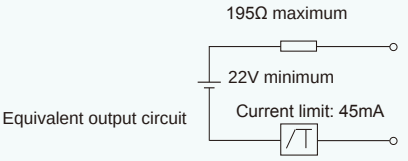 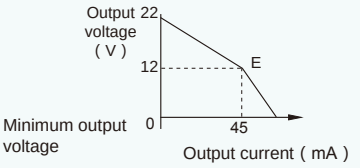
Safe area	Input: state-on, supply to hazardous area. Input: state-off, non-supply to hazardous area.
Response time	≤100ms
Dielectric strength (between input, output and power supply)	2500V,a.c.;1min
EMC	accord with GB/T 18268(IEC 61326-1)
Operating temperature	-20℃~+60℃
Suitable apparatus and Suitable location	Field I-S apparatus like magent valve, audibel-visual annunciator 0 area, 1area, 2 area, II A, II B, II C, T4~T6 Hazardous-area
Supply voltage	20 ~ 35V,d.c.
Power supply protection	Protect the product form reverse supply voltge destroy
Current consumption: (at 24Vdc supply,20mA signal output)	≤ 75mA
Ex certification	National Supervision and Inspection Center for Explosion Protection and Safety of Instrumentation (NEPSI)
Ex-marking	[Ex ia]II C
Max. voltage (Um)	250V
Intrinsic safety parameters	Terminal (7、8) , (10、11) Uo=10.5V,Io=14mA,Po=37mW II C:Co=2.4μF,Lo=165mH; II B:Co=7.2μF,Lo=840mH; II A:Co=19.2μF,Lo=1320mH
Installation	35mm DIN guide rail
Outline dimensions	114.5mm × 99mm × 12.5mm

B.C.E. S.r.l. Via Regina Pacis, 54/c - I 41049 Sassuolo (MO) Tel.: (+39) 0536 811616 - Fax.: (+39) 0536 811500 e-mail: bce@bce.it - Website: www.bce.it

Wiring diagram of DO isolated barrier

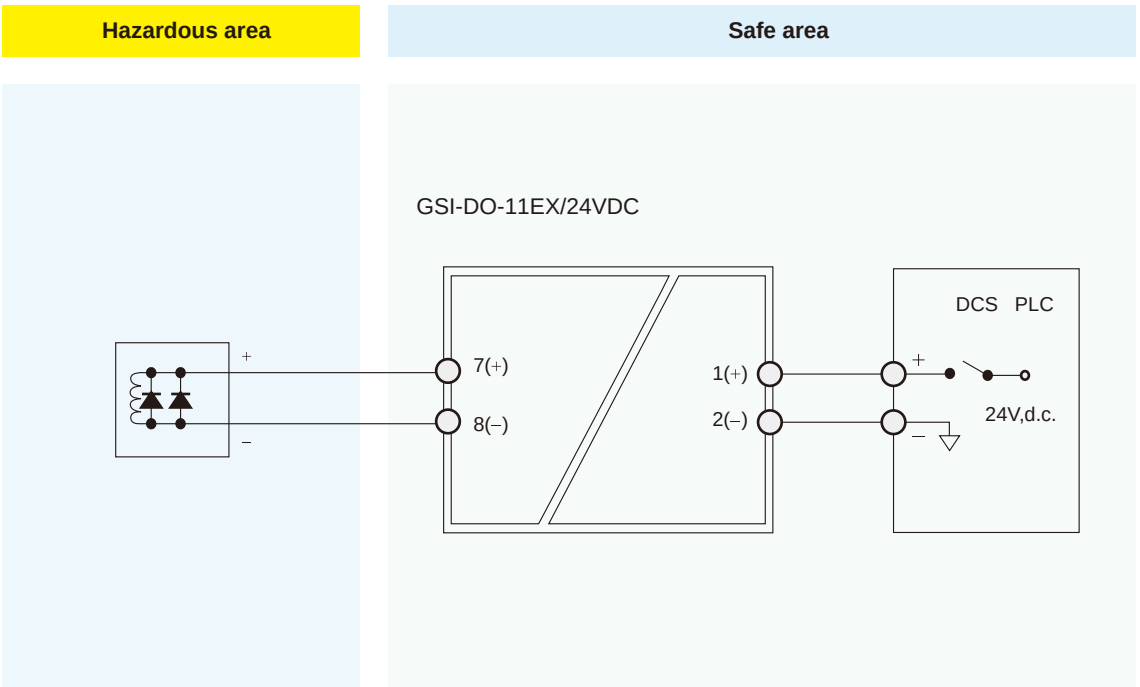

B.C.E. S.r.l. Via Regina Pacis, 54/c - I 41049 Sassuolo (MO)
Tel.: (+39) 0536 811616 - Fax.: (+39) 0536 811500
e-mail: bce@bce.it - Website: www.bce.it

AI isolated barrier

The following isolated barrier supplies for the 2- or 3-wires transmitter located in hazardous area which also applies as a repeater for DC 4~20mA signals. The output can be DC 4~20mA or 1~5V.This product need be supplied independently,and the power supply,input and output are isolated from each other.

Order data	Type	Type	Type
1IN/1OUT	GSI-AI-11EX-I/24VDC	GSI-AI-11EX-U/24VDC	
2IN/2OUT			GSI-AI-12EX-I/24VDC
Technical parameters			
Input channal QYT	1	1	1
Output channal QYT	1	1	2
Hazardous area	input: Input current: 4~20mA,d.c.,HART digital signal.Voltage distributed to transmitter: ≥15.5V at 20mA Maximum open-circuit voltage: ≤28V		
Safe area	Output current: 4~20mA,0~20mA,HART digital signal (GSI-AI-11EX-I/24VDC) Load resistance: RL≤550Ω(1IN1OUT) RL≤300Ω(1IN2OUT) HART, Load resistance:RL≥250Ω Output voltage: 1~5V，0~5V(GSI-AI-11EX-U/24VDC) Load resistance: RL≥300kΩ (customers need choice voltage/current output)		
Response time	After 0.5ms, reach at 90% of final value		
Transfer accuracy(20℃,4~20mA)	0.1%F.S.(typical value：0.05%F.S.)		
Temperature drift(-20℃~+60℃)	0.005%F.S. /℃		
Dielectric strength (between input, output and power supply)	2500V,a.c.;1min		
EMC	Accord with GB/T 18268(IEC 61326-1)		
Operating temperature	-20℃~+60℃		
Suitable apparatus and Suitable location	2-wire HART transmitter,3-wire transmitter,current source 0 area, 1area, 2 area, II A, II B, II C, T4~T6 Hazardous-area		
Supply voltage	20～35V,d.c.		
Power supply protection	Protect the product form reverse supply voltge destroy		
Current consumption: (at 24Vdc supply,20mA signal output)	≤70mA	≤70mA	≤90mA
Ex certification	National Supervision and Inspection Center for Explosion Protection and Safety of Instrumentation (NEPSI)		
Ex-marking	[Ex ia]II C		
Max. voltage (Um)	250V		
Intrinsic safety parameters	Terminal (7、8) ，(10、11) Uo=10.5V,Io=14mA,Po=37mW II C:Co=2.4μF,Lo=165mH; II B:Co=7.2μF,Lo=840mH; II A:Co=19.2μF,Lo=1320mH		
Installation	35mm DIN guide rail		
Outline dimensions	114.5mm × 99mm × 12.5mm		114.5mm × 99mm × 17.5mm

B.C.E. S.r.l. Via Regina Pacis, 54/c - I 41049 Sassuolo (MO) Tel.: (+39) 0536 811616 - Fax.: (+39) 0536 811500 e-mail: bce@bce.it - Website: www.bce.it

Wiring diagram of AI isolated barrier

Hazardous area	Safe area

GSI-AI-11EX-I/24VDC
GSI-AI-11EX-U/24VDC

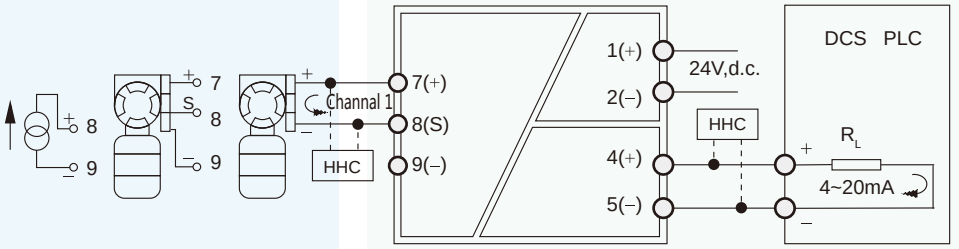

GSI-AI-12EX-I/24VDC

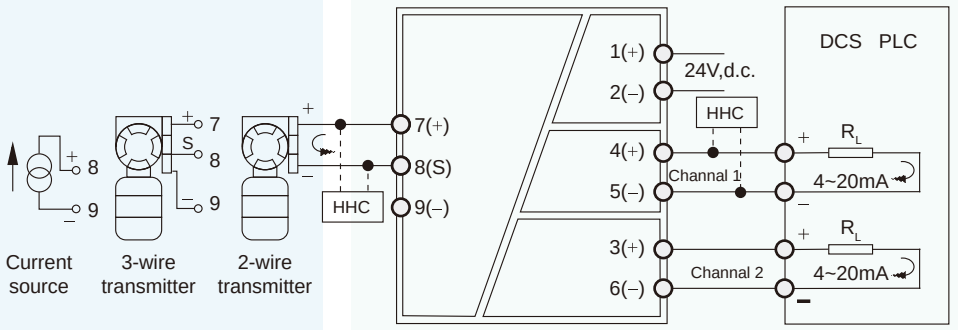

B.C.E. S.r.l. Via Regina Pacis, 54/c - I 41049 Sassuolo (MO)
Tel.: (+39) 0536 811616 - Fax.: (+39) 0536 811500
e-mail: bce@bce.it - Website: www.bce.it

TC input isolated barrier

The following isolated barrier can convert thermocouple signal, millivolt signal mounted in hazardous area into 4~20mA current for driving a safe-area load.It's an intelligent instrument with the function of auto cold-end compensation, it's measure range and thermocouple division are programable through computer. This product needs to be supplied independently, and the power supply,input and output are isolated from each other.

Order data	Type
1IN/1OUT	GSI-TI-11EX-I/24VDC
Technical parameters	
Input channal QYT	1
Output channal QYT	1
Hazardous area	Input: please see the table on P19 (customer needs to set signal type & measuring range or programming)
Safe area	Output current:0/4~20mA,d.c. Load resistance:≤550Ω Output voltage:0/1~5V,d.c. Load resistance:≥300kΩ (customers need choice voltage/current output)
Alarm indication	Under-range:LED L flashing,output current is about 3.8mA ver-range:LED H flashing,output current is about 20.8mA Input circuit open,both H and L are flashing,output current:21mA
Response time	After 2s, reach at 90% of final value
Transfer accuracy(20℃,4~20mA)	Please see the table on P19 (exlude cold-end compensation errors)
Cold end compensation accuracy	±1℃(-20℃~60℃)
Temperature drift(-20℃~+60℃)	0.01%F.S. /℃
Dielectric strength (between input, output and power supply)	2500V,a.c.;1min
EMC	Accord with GB/T 18268(IEC 61326-1)
Operating temperature	-20℃~+60℃
Suitable apparatus and Suitable location	T、E 、J、K、N、R、S、B and mV signal 0 area, 1area, 2 area, II A, II B, II C, T4~T6 Hazardous-area
Supply voltage	20 ~ 35V,d.c.
Power supply protection	Protect the product form reverse supply voltge destroy
Current consumption: (at 24Vdc supply,20mA signal output)	≤ 50mA
Ex certification	National Supervision and Inspection Center for Explosion Protection and Safety of Instrumentation (NEPSI)
Ex-marking	[Ex ia]II C
Max. voltage (Um)	250V
Intrinsic safety parameters	Terminal (7、8) , (10、11) Uo=10.5V,Io=14mA,Po=37mW II C:Co=2.4μF,Lo=165mH; II B:Co=7.2μF,Lo=840mH; II A:Co=19.2μF,Lo=1320mH
Installation	35mm DIN guide rail
Outline dimensions	114.5mm × 99mm × 17.5mm

B.C.E. S.r.l. Via Regina Pacis, 54/c - I 41049 Sassuolo (MO) Tel.: (+39) 0536 811616 - Fax.: (+39) 0536 811500 e-mail: bce@bce.it - Website: www.bce.it

Wiring diagram of AI isolated barrier

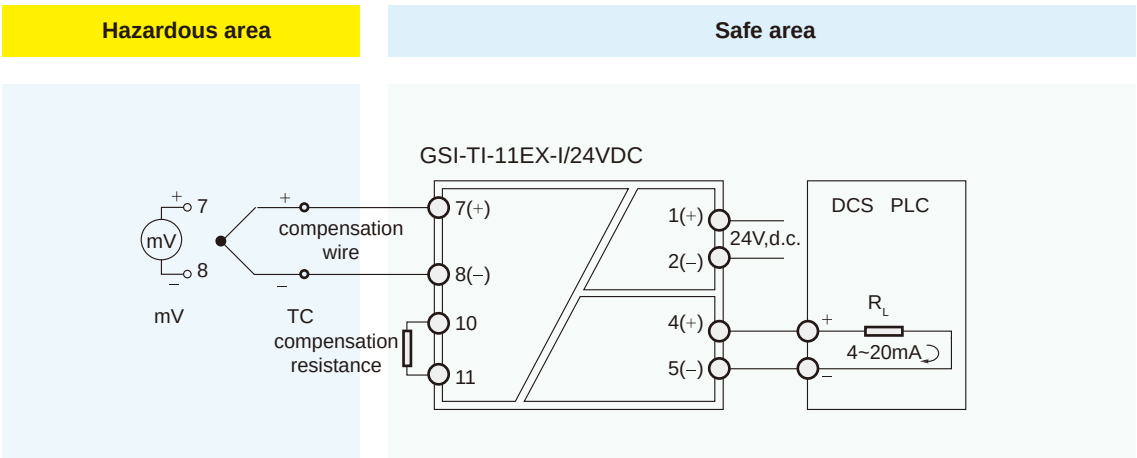

Conversion accuracy and measurement range				
Type	Signal	measurement range	Min.range	Accuracy
TC	T	-160℃ ~ +400℃	50℃	0.5℃/0.1%
	E	-80℃ ~ +700℃	50℃	0.5℃/0.1%
	J	-90℃ ~ +900℃	50℃	0.5℃/0.1%
	K	-150℃ ~ +1372℃	50℃	0.5℃/0.1%
	N	-200℃ ~ +1300℃	50℃	0.5℃/0.1%
	R	-40℃ ~ +1768℃	500℃	1.5℃/0.1%
	S	-40℃ ~ +1768℃	500℃	1.5℃/0.1%
	B	+320℃ ~ +1820℃	500℃	1.5℃/0.1%

Note: % is equivalent to the setting range(take the larger value between measure range error and absolute error when applied).

B.C.E. S.r.l. Via Regina Pacis, 54/c - I 41049 Sassuolo (MO) Tel.: (+39) 0536 811616 - Fax.: (+39) 0536 811500 e-mail: bce@bce.it - Website: www.bce.it

RTD input isolated barrier

The following isolated barrier can convert signals from 2-wire、3-wire RTDS signal mounted in hazardous area into 0/4~20mA current or 0/1~5V voltage.It can be configured by PC. It's measure range and thermal resistance division are programable through computer. This product need be supplied independently,and the power supply,input and output are isolated from each other.

Order data	Type
1IN/1OUT	GSI-RI-11EX-I/24VDC
Technical parameters	
Input channal QYT	1
Output channal QYT	1
Hazardous area	input: please see the table on P21 (customer needs to set signal type & measuring range)
Safe area	Output current:0/4~20mA,d.c. Load resistance:≤550Ω Output voltage:0/1~5V,d.c. Load resistance:≥300kΩ (customers need choice voltage/current output)
Alarm indication	Under-range:LED L flashing,output current is about 3.8mA ver-range:LED H flashing,output current is about 20.8mA Input circuit open,both H and L are flashing,output current:21mA Short circuit,both H and L are flashing,output current:3mA.
Response time	After 0.5ms, reach at 90% of final value
Transfer accuracy(20℃,4~20mA)	Please see the table on P21 (exlude cold-end compensation errors)
Temperature drift(-20℃~+60℃)	0.01%F.S. /℃
Dielectric strength (between input, output and power supply)	2500V,a.c.;1min
EMC	accord with GB/T 18268(IEC 61326-1)
Operating temperature	-20℃~+60℃
Suitable apparatus and Suitable location	2 wire and 3 wire RTD 0 area, 1area, 2 area, II A, II B, II C, T4~T6 Hazardous-area
Supply voltage	20 ~ 35V,d.c.
Power supply protection	Protect the product form reverse supply voltge destroy
Current consumption: (at 24Vdc supply,20mA signal output)	≤ 50mA
Ex certification	National Supervision and Inspection Center for Explosion Protection and Safety of Instrumentation (NEPSI)
Ex-marking	[Ex ia]II C
Max. voltage (Um)	250V
Intrinsic safety parameters	Terminal (7、8) , (10、11) Uo=10.5V,Io=14mA,Po=37mW II C:Co=2.4μF,Lo=165mH; II B:Co=7.2μF,Lo=840mH; II A:Co=19.2μF,Lo=1320mH
Installation	35mm DIN guide rail
Outline dimensions	114.5mm × 99mm × 12.5mm

B.C.E. S.r.l. Via Regina Pacis, 54/c - I 41049 Sassuolo (MO) Tel.: (+39) 0536 811616 - Fax.: (+39) 0536 811500 e-mail: bce@bce.it - Website: www.bce.it

Wiring diagram of RTD input isolated barrier

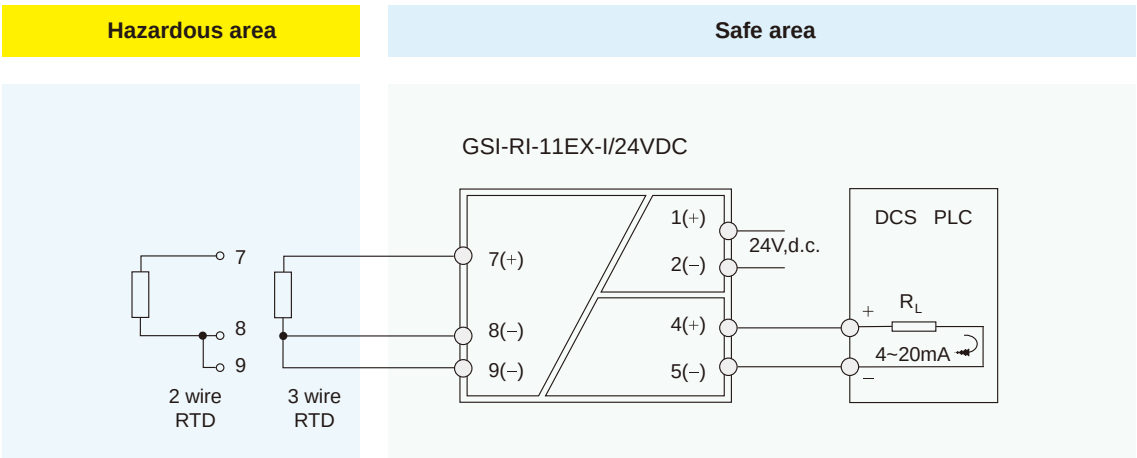

Note: 1.there thread resistance value should be equal, when 3-wire RTD inputs.
2. terminals 8 and9, 11 and 12 must be connected, when 2-wire RTD inputs.

Conversion accuracy and measurement range				
Type	Signal	Range	Min.range	Accuracy
RTD	Pt100	-200℃ ~ +850℃	20℃	0.2℃/0.1%
	Cu50	-50℃ ~ +150℃	20℃	0.2℃/0.1%
	Cu100	-50℃ ~ +150℃	20℃	0.2℃/0.1%

Note: % is equivalent to the setting range (take the larger value between measure range error and absolute error when applied).

B.C.E. S.r.l. Via Regina Pacis, 54/c - I 41049 Sassuolo (MO)
Tel.: (+39) 0536 811616 - Fax.: (+39) 0536 811500
e-mail: bce@bce.it - Website: www.bce.it

AO isolated barrier

The following isolated barrier transmits 4 ~20 mA signals to the Ex area in an intrinsically safe manner. It accepts 4~20mA floating signals from a safe-area controller to drive a valve positioned, electric converter and so on. The analog value can be overlayed with digital (HART) communication signals on the Ex or non-Ex side and transmitted bidirectionally. The power part,the input part and the output part are isolated from each other.

Order data	Type
1IN/1OUT	GSI-AO-11EX-I/24VDC
Technical parameters	
Input channal QYT	1
Output channal QYT	1
Hazardous area	Onput current: 4~20mA,d.c.,HART digital signal Load resistance: ≤550Ω Load resistance: ≥ 250Ω(HART) Output voltage: 1~5V,d.c. 0~5V,d.c. Load resistance: ≥300kΩ (customers need choice voltage/current output)
Safe area	Input current: 4~20mA，0~20mA Input voltage drop: ≤7V
Response time	After 0.5ms, reach at 90% of final value
Transfer accuracy(20℃,4~20mA)	0.1%F.S. （Typical value：0.01%F.S. ）
Temperature drift(-20℃~+60℃)	0.01%F.S. /℃
Dielectric strength (between input, output and power supply)	2500V,a.c.;1min
EMC	accord with GB/T 18268(IEC 61326-1)
Operating temperature	-20℃~+60℃
Suitable apparatus and Suitable location	2-wire valve positioner, electrical converter 0 area, 1area, 2 area, II A, II B, II C, T4~T6 Hazardous-area
Supply voltage	20～35V,d.c.
Power supply protection	Protect the product form reverse supply voltge destroy
Current consumption: (at 24Vdc supply,20mA signal output)	≤ 60mA
Ex certification	National Supervision and Inspection Center for Explosion Protection and Safety of Instrumentation (NEPSI)
Ex-marking	[Ex ia]II C
Max. voltage (Um)	250V
Intrinsic safety parameters	Terminal（7、8），（10、11） Uo=10.5V,Io=14mA,Po=37mW II C:Co=2.4μF,Lo=165mH; II B:Co=7.2μF,Lo=840mH; II A:Co=19.2μF,Lo=1320mH
Installation	35mm DIN guide rail
Outline dimensions	114.5mm × 99mm × 12.5mm

B.C.E. S.r.l. Via Regina Pacis, 54/c - I 41049 Sassuolo (MO) Tel.: (+39) 0536 811616 - Fax.: (+39) 0536 811500 e-mail: bce@bce.it - Website: www.bce.it

Wiring diagram of AO isolated barrier

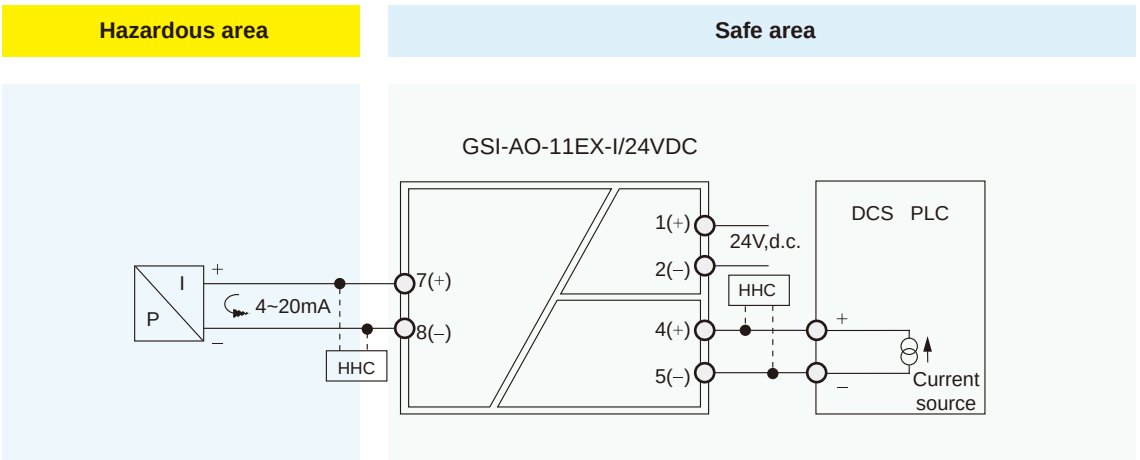

B.C.E. S.r.l. Via Regina Pacis, 54/c - I 41049 Sassuolo (MO)
Tel.: (+39) 0536 811616 - Fax.: (+39) 0536 811500
e-mail: bce@bce.it - Website: www.bce.it

Rotation rate monitor

- Shell could be mounted on DIN guide rail
- 1-channel signal conditioner
- Universal usage at different power supplies
- Input for 2- or 3-wire sensors, NAMUR sensors or dry contacts
- 2 Relay output
- 1 transistor output
- 1 AO 0/4...20mA
- Line fault detection

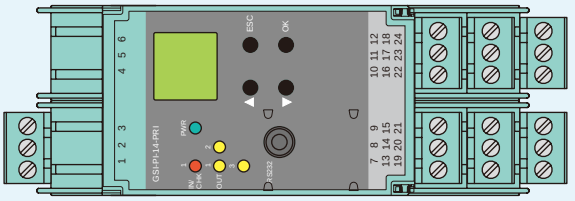

Order data	
Type	GSI-PI-14-PRI
Input specifications	
Input 1 (with LED indicator)	2- or 3-wire sensor, mechanical contact
Input 1 specifications	Open circuit voltage/short-circuit current: 22 V / 40 mA; Input resistance: 4.7 kΩ Pulse duration: > 50 µs; Switching point/switching hysteresis: logic 1: > 2.5 mA ; logic 0: < 1.9 mA
Input 1 frequency	0.001 ... 12000 Hz
Input 2	startup override: 1 ... 1000 s, adjustable in steps of 1 s; Open circuit voltage/short-circuit current: 18 V / 5 mA
Output specifications	
Output 1, 2 (with LED indicator)	Relay output, Contact loading 250 V AC / 2 A / cos φ ≥ 0.7 ; 40 V DC / 2 A
Output 3 (with LED indicator)	Transistor output, Contact loading 40 V DC
Output 4	Current range: 0 ... 20 mA 0/4 ... 20 mA Open loop voltage: ≤ 24 V DC; Load: ≤ 650 Ω
General specifications	
Rated voltage [V]	20 ... 90 V DC / 48 ... 253 V AC 50 ... 60 Hz
Power loss/power consumption [VA]	2.5 VA / 2.2 W
Ambient temperature [°C]	-20 ... 60 °C
Mass [kg]	300 g
Display	LD Display
Dimensions	40 x 119 x 115 mm

Connection

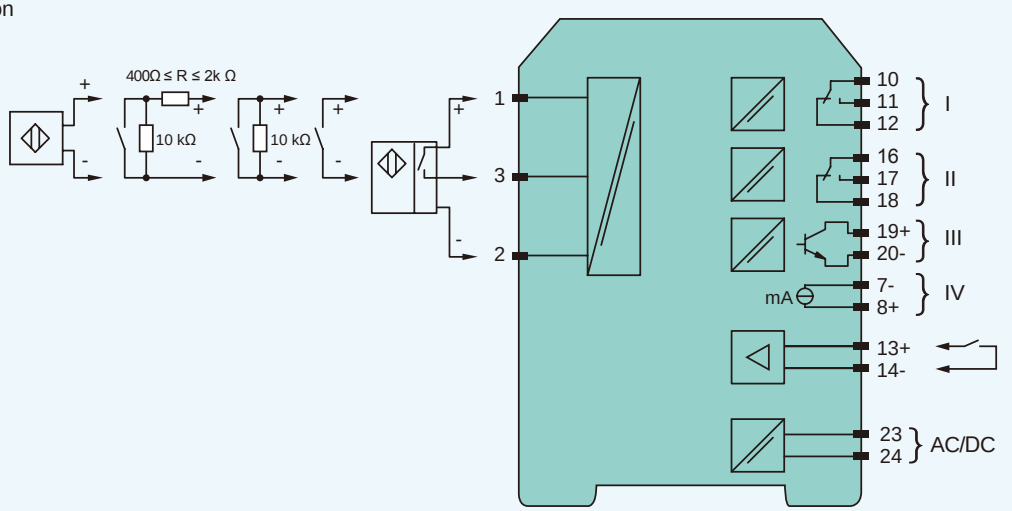

B.C.E. S.r.l. Via Regina Pacis, 54/c - I 41049 Sassuolo (MO) Tel.: (+39) 0536 811616 - Fax.: (+39) 0536 811500 e-mail: bce@bce.it - Website: www.bce.it

Rotation rate monitor

Shell could be mounted on DIN guide rail
1-channel signal conditioner
Universal usage at different power supplies
Input for NAMUR sensors or dry contacts
2 Relay output
1 transistor output
1 AO 0/4...20mA
Line fault detection

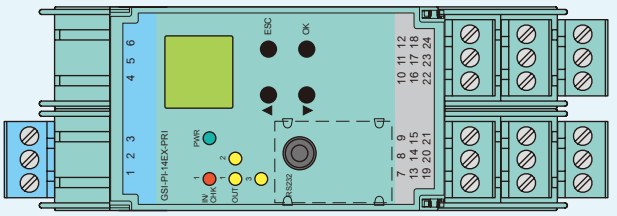

Order data	
Type	GSI-PI-14EX-PRI
Input specifications	
Input 1 (with LED indicator)	sensor acc. to EN 60947-5-6 (NAMUR) or mechanical contact (intrinsically safe)
Input 1 specifications	breakage I ≤ 0.15 mA; short-circuit I > 6.5 mA ; Pulse duration: > 50 µs ; Data for application in connection with Ex-areas : Uo = 10.1 V ; Io = 13.5 mA ; Po = 34 mW
Input 1 measurement range	0.001 ... 5000 Hz
Input 2	startup override: 1 ... 1000 s, adjustable in steps of 1 s; Open circuit voltage/short-circuit current: 18 V / 5 mA
Output specifications	
Output 1, 2 (with LED indicator)	Relay output, Contact loading 250 V AC / 2 A / cos φ ≥ 0.7 ; 40 V DC / 2 A
Output 3 (with LED indicator)	Transistor output, Contact loading 40 V DC
Output 4	Current range: 0 ... 20 mA 0/4 ... 20 mA Open loop voltage: ≤ 24 V DC; Load: ≤ 650 Ω
General specifications	
Rated voltage [V]	20 ... 90 V DC / 48 ... 253 V AC 50 ... 60 Hz
Power loss/power consumption [VA]	2.5 VA / 2.2 W
Ambient temperature [°C]	-20 ... 60 °C
Mass [kg]	300 g
Display	LD Display
Dimensions	40 x 119 x 115 mm

Connection

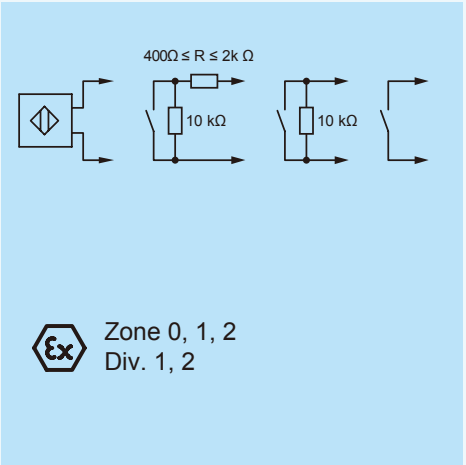

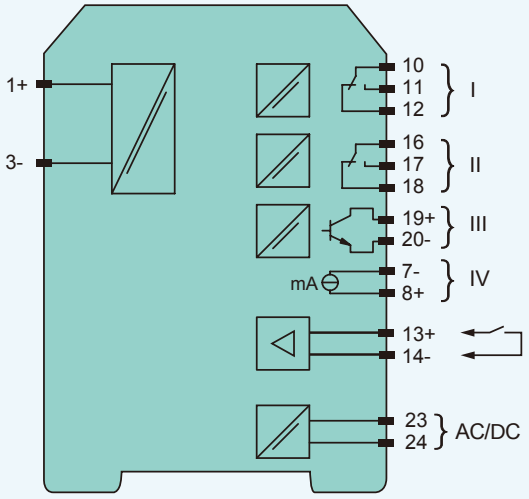

B.C.E. S.r.l. Via Regina Pacis, 54/c - I 41049 Sassuolo (MO)
Tel.: (+39) 0536 811616 - Fax.: (+39) 0536 811500
e-mail: bce@bce.it - Website: www.bce.it

Rotation rate monitor

Shell could be mounted on DIN guide rail
1-channel signal conditioner
Universal usage at different power supplies
Input for 2- or 3-wire sensors, NAMUR sensors or dry contacts
2 Relay output
Line fault detection

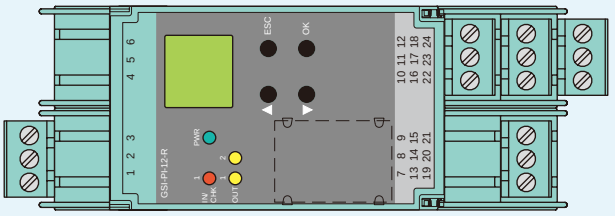

Order data	
Type	GSI-PI-12-R
Input specifications	
Input 1 (with LED indicator)	2- or 3-wire sensor, sensor acc. to EN 60947-5-6 (NAMUR) or mechanical contact
Input 1 specifications	Open circuit voltage/short-circuit current: 22 V / 40 mA; Input resistance: 4.7 kΩ Pulse duration: > 50 µs; Switching point/switching hysteresis: logic 1: > 2.5 mA ; logic 0: < 1.9 mA
Input 1 frequency	0.001 ... 12000 Hz
Input 2	startup override: 1 ... 1000 s, adjustable in steps of 1 s; Open circuit voltage/short-circuit current: 18 V / 5 mA
Output specifications	
Output 1, 2 (with LED indicator)	Relay output, Contact loading 250 V AC / 2 A / cos φ ≥ 0.7 ; 40 V DC / 2 A
General specifications	
Rated voltage [V]	20 ... 90 V DC / 48 ... 253 V AC 50 ... 60 Hz
Power loss/power consumption [VA]	2 VA / 1.8 W
Ambient temperature [°C]	-20 ... 60 °C
Mass [kg]	300 g
Display	LD Display
Dimensions	40 x 119 x 115 mm

Connection

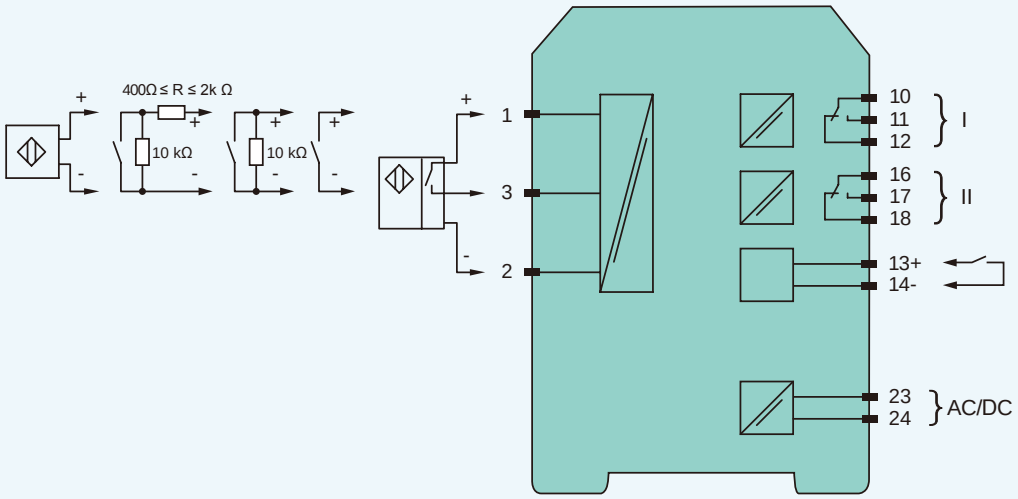

B.C.E. S.r.l. Via Regina Pacis, 54/c - I 41049 Sassuolo (MO) Tel.: (+39) 0536 811616 - Fax.: (+39) 0536 811500 e-mail: bce@bce.it - Website: www.bce.it

Rotation rate monitor

Shell could be mounted on DIN guide rail
1-channel signal conditioner
NAMUR sensors or dry contacts
2 Relay output
Line fault detection

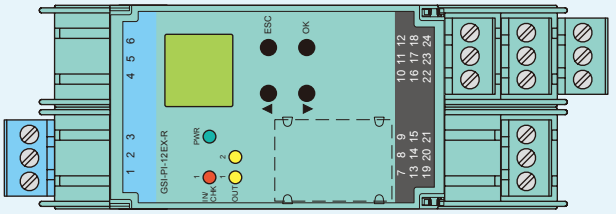

Order data	
Type	GSI-PI-12EX-R
Input specifications	
Input 1 (with LED indicator)	NAMUR sensors or mechanical contact
Input 1 specifications	Lead monitoring: breakage I ≤ 0.15 mA; short-circuit I > 6.5 mA; Pulse duration: > 50 µs; Data for application in connection with Ex-areas: Uo = 10.1 V ; Io = 13.5 mA ; Po = 34 mW
Input 1 frequency	0.001 ... 12000 Hz
Input 2	startup override: 1 ... 1000 s, adjustable in steps of 1 s; Open circuit voltage/short-circuit current: 18 V / 5 mA
Output specifications	
Output 1, 2 (with LED indicator)	Relay output, Contact loading 250 V AC / 2 A / cos φ ≥ 0.7 ; 40 V DC / 2 A
General specifications	
Rated voltage [V]	20 ... 90 V DC / 48 ... 253 V AC 50 ... 60 Hz
Power loss/power consumption [VA]	2 VA
Ambient temperature [°C]	-20 ... 60 °C
Mass [kg]	300 g
Display	LD Display
Dimensions	40 x 119 x 115 mm

Connection

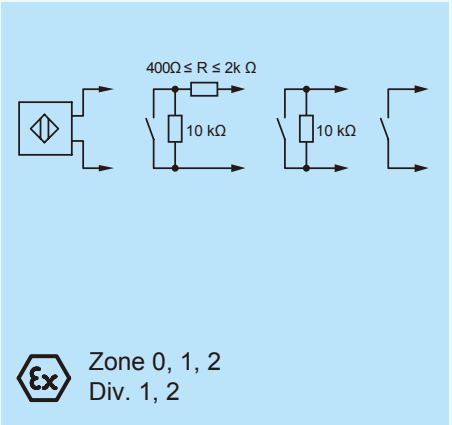

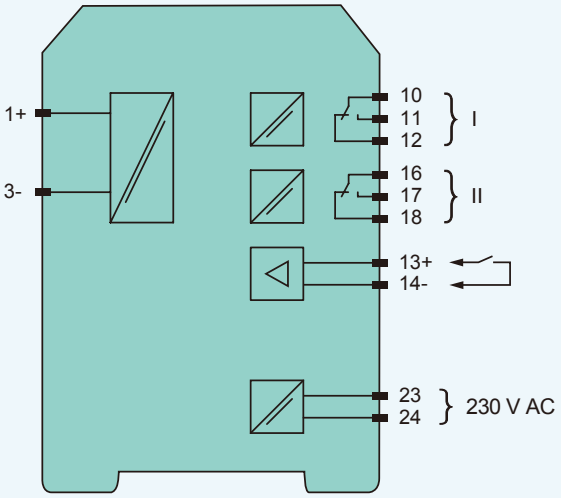

B.C.E. S.r.l. Via Regina Pacis, 54/c - I 41049 Sassuolo (MO)
Tel.: (+39) 0536 811616 - Fax.: (+39) 0536 811500
e-mail: bce@bce.it - Website: www.bce.it

5V voltage system general surge protectors

12.5mm Ultra-slim space-saving design
Protectors support hot plug
Protection module could detect individually.
Anti differential mode, the common mode interference:
Voltage protection level<500V
Anti differential mode interference:
Voltage protection level>500V
DIN35 rail connected to the ground

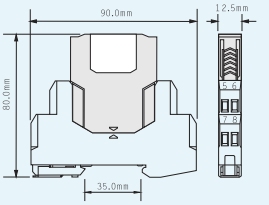

Order data	Type(Anti differential mode interference)	Type(Anti differential mode, the common mode interference)
2-wire	GSI-5-W	GSI-5-E2
3-wire	GSI-5-W3	GSI-5-E4
4-wire	GSI-5-W4	
Tech parameter		
Rated operated voltage Un	5V	
Max. operated voltage Uc	6V	
Rated operated current IL	800mA	
Rated discharge current In (8/20μs)	10kA	
Max. discharge current Imax (8/20μs)	20kA	
Residual voltage Up (8/20μs) L-L/L-G	40V / 600V	40V / 40V
Residual voltage Up (1kV/μs) L-L/L-G	20V / 600V	20V / 20V
Bandwidth (-0.5dB)	10MHz	
Response time	1ns	
Loop resistance (per line)	1Ω	
Ambient temperature	-40℃ ~ +70℃	
Degree of protection (acc. IEC60529)	IP20	
Case flammability (UL94)	PA66 / V0	
Test standard	GB/T 18802.21 / IEC 61643-21	
Certifcate		
SIL Certification	SIL3	
Lightning protection test	Shanghai Lightning Protection Center	

B.C.E. S.r.l. Via Regina Pacis, 54/c - I 41049 Sassuolo (MO)
Tel.: (+39) 0536 811616 - Fax.: (+39) 0536 811500
e-mail: bce@bce.it - Website: www.bce.it

Wiring diagram of 5V voltage system general surge protectors

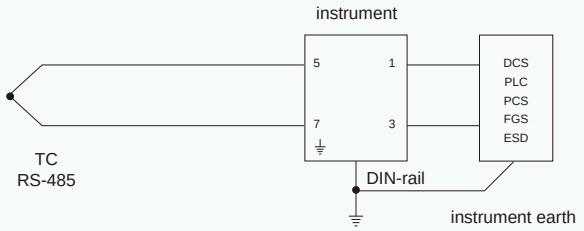

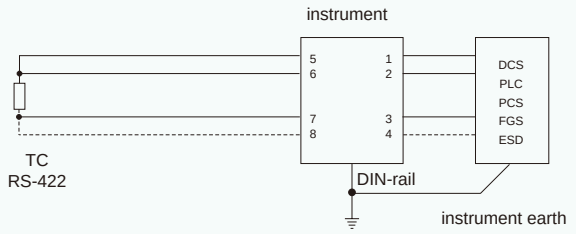

	Anti differential mode interference	Anti differential mode, the common mode interference
2-wire	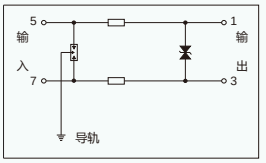 GSI-5-W	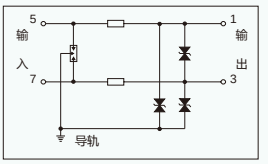 GSI-5-E2
3-wire	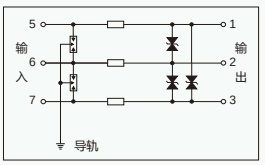 GSI-5-W3	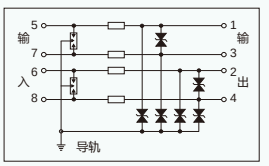 GSI-5-E4
4-wire	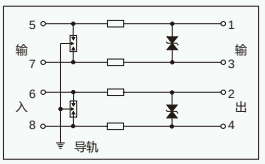 GSI-5-W4	

B.C.E. S.r.l. Via Regina Pacis, 54/c - I 41049 Sassuolo (MO)
Tel.: (+39) 0536 811616 - Fax.: (+39) 0536 811500
e-mail: bce@bce.it - Website: www.bce.it

24V voltage system general surge protectors

12.5mm Ultra-slim space-saving design
Protectors support hot plug
Protection module could detect individually.
Anti differential mode, the common mode interference:
Voltage protection level<500V
Anti differential mode interference:
Voltage protection level>500V
DIN35 rail connected to the ground

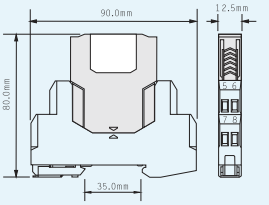

Order data	Type(Anti differential mode interference)	Type(Anti differential mode, the common mode interference)
2-wire	GSI-24-W	GSI-24-E2
3-wire	GSI-24-W3	GSI-24-E4
4-wire	GSI-24-W4	
Tech parameter		
Rated operated voltage Un	24V	
Max. operated voltage Uc	32V	
Rated operated current IL	800mA	
Rated discharge current In (8/20μs)	10kA	
Max. discharge current Imax (8/20μs)	20kA	
Residual voltage Up (8/20μs) L-L/L-G	60V / 600V	60V / 60V
Residual voltage Up (1kV/μs) L-L/L-G	40V / 600V	40V / 40V
Bandwidth (-0.5dB)	10MHz	
Response time	1ns	
Loop resistance (per line)	1Ω	
Ambient temperature	-40℃ ~ +70℃	
Degree of protection (acc. IEC60529)	IP20	
Case flammability (UL94)	PA66 / V0	
Test standard	GB/T 18802.21 / IEC 61643-21	
Certifcate		
SIL Certification	SIL3	
Lightning protection test	Shanghai Lightning Protection Center	

B.C.E. S.r.l. Via Regina Pacis, 54/c - I 41049 Sassuolo (MO)
Tel.: (+39) 0536 811616 - Fax.: (+39) 0536 811500
e-mail: bce@bce.it - Website: www.bce.it

Wiring diagram of 24V voltage system general surge protectors

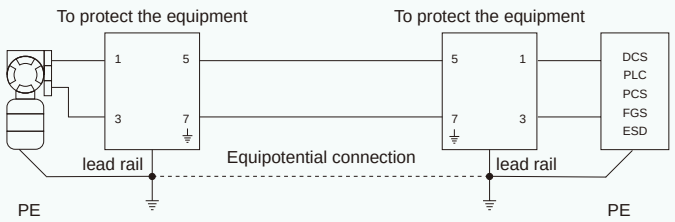

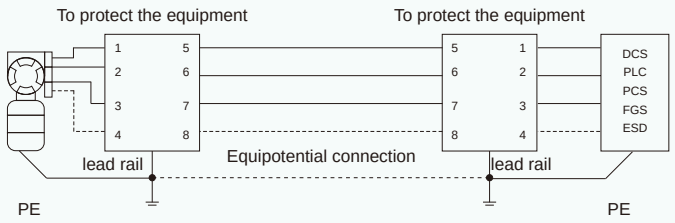

Anti differential mode interference

Anti differential mode, the common mode interference

2-wire

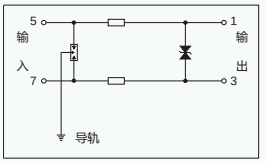

GSI--24-W

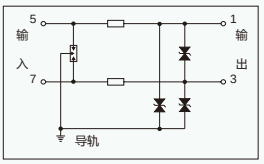

GSI-24-E2

3-wire

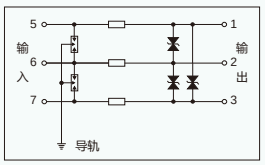

GSI-24-W3

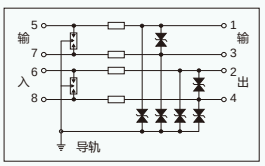

GSI-24-E4

4-wire

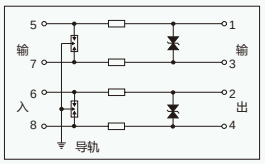

GSI-24-W4

B.C.E. S.r.l. Via Regina Pacis, 54/c - I 41049 Sassuolo (MO) Tel.: (+39) 0536 811616 - Fax.: (+39) 0536 811500 e-mail: bce@bce.it - Website: www.bce.it

Power Surge Protectors

12.5mm Ultra-slim space-saving design
Protectors support hot plug
Protection module could detect individually.
20kA (8/20μs) anti - surge capacity
Through the DIN35 lead rail grounding

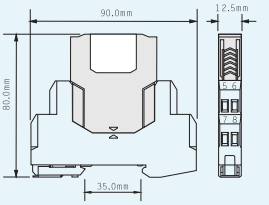

Order data	Genre(24VDC)	Genre(220VAC)
Type	GSI-24-P	GSI-220-P
Tech parameter		
Rated operated voltage Un	24VDC	220VAC
Max. operated voltage Uc	32VDC	275VAC
Rated operated current IL	16A	10A
Rated discharge current In (8/20μs)	10kA	
Max. discharge current Imax (8/20μs)	20kA	
Residual voltage Up (8/20μs) L-L/L-G	85V / 600V	-
Voltage protection Up (8/20μs)	-	1200V
Response time	10ns	
Ambient temperature	-40℃ ~ +70℃	
Degree of protection (acc. IEC60529)	IP20	
Case flammability (UL94)	PA66 / V0	
Test standard	GB/T 18802.21 / IEC 61643-21	
Certifcate		
Lightning protection test	Shanghai Lightning Protection Center	

B.C.E. S.r.l. Via Regina Pacis, 54/c - I 41049 Sassuolo (MO) Tel.: (+39) 0536 811616 - Fax.: (+39) 0536 811500 e-mail: bce@bce.it - Website: www.bce.it

Wiring diagram of power surge protectors

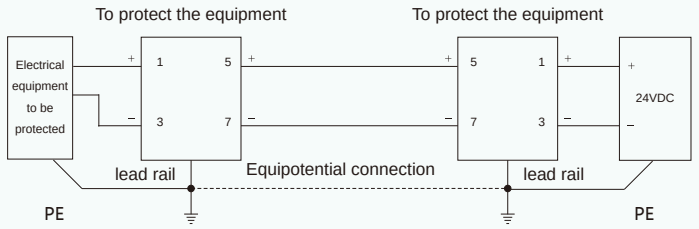

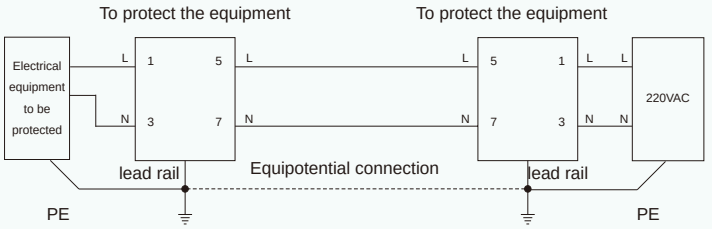

24V power type

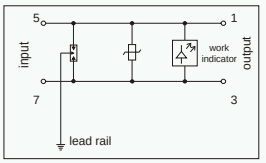

GSI-24-P

220V power type

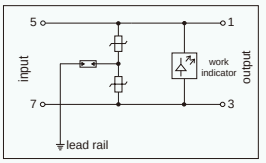

GSI-220-P

B.C.E. S.r.l. Via Regina Pacis, 54/c - I 41049 Sassuolo (MO)
Tel.: (+39) 0536 811616 - Fax.: (+39) 0536 811500
e-mail: bce@bce.it - Website: www.bce.it

AC type Surge Protectors

Work status indicator
- green : normal
- red : failure

Protectors support hot plug
DIN35mm guide rail mounting
Applicable to the Single phase AC power
Applicable to mount in lightning protection ares LPZ2/LPZ3

Dimension

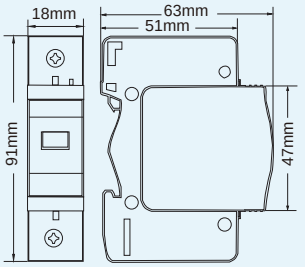

Order data	Type(20KA)	Type(40KA)	Type(65KA)
1P	GSI-20/1P	GSI-40/1P	GSI-65/1P
1P+1	GSI-20/1P+1	GSI-40/1P+1	GSI-65/1P+1
2P	GSI-20/2P	GSI-40/2P	GSI-65/2P
3P	GSI-20/3P	GSI-40/3P	GSI-65/3P
3P+1	GSI-20/3P+1	GSI-40/3P+1	GSI-65/3P+1
4P	GSI-20/4P	GSI-40/4P	GSI-65/4P
Tech parameter			
Rated operated voltage Un	220VAC	220VAC	220VAC
Max. operated voltage Uc	320VAC	440VAC	385VAC
Rated operated current In (8/20μs)	10KA	20KA	40KA
Max. discharge current Imax (8/20μs)	20KA	40KA	65KA
Voltage protection Up (In)	< 1.5KV	< 2.2KV	< 2.2KV
Overcurrent protection device	16~25A	25~40A	40A
Recommended grounding wire diameter	10~35mm^2	16~35mm^2	16~35mm^2
Response time	25ns	25ns	25ns
Ambient temperature	-40 ℃~+70 ℃	-40 ℃~+70 ℃	-40 ℃~+70 ℃
Degree of protection (acc. IEC60529)	IP20	IP20	IP20
Case flammability (UL94)	PA66/V0	PA66/V0	PA66/V0

B.C.E. S.r.l. Via Regina Pacis, 54/c - I 41049 Sassuolo (MO) Tel.: (+39) 0536 811616 - Fax.: (+39) 0536 811500 e-mail: bce@bce.it - Website: www.bce.it

Wiring diagram of AC power surge protectors

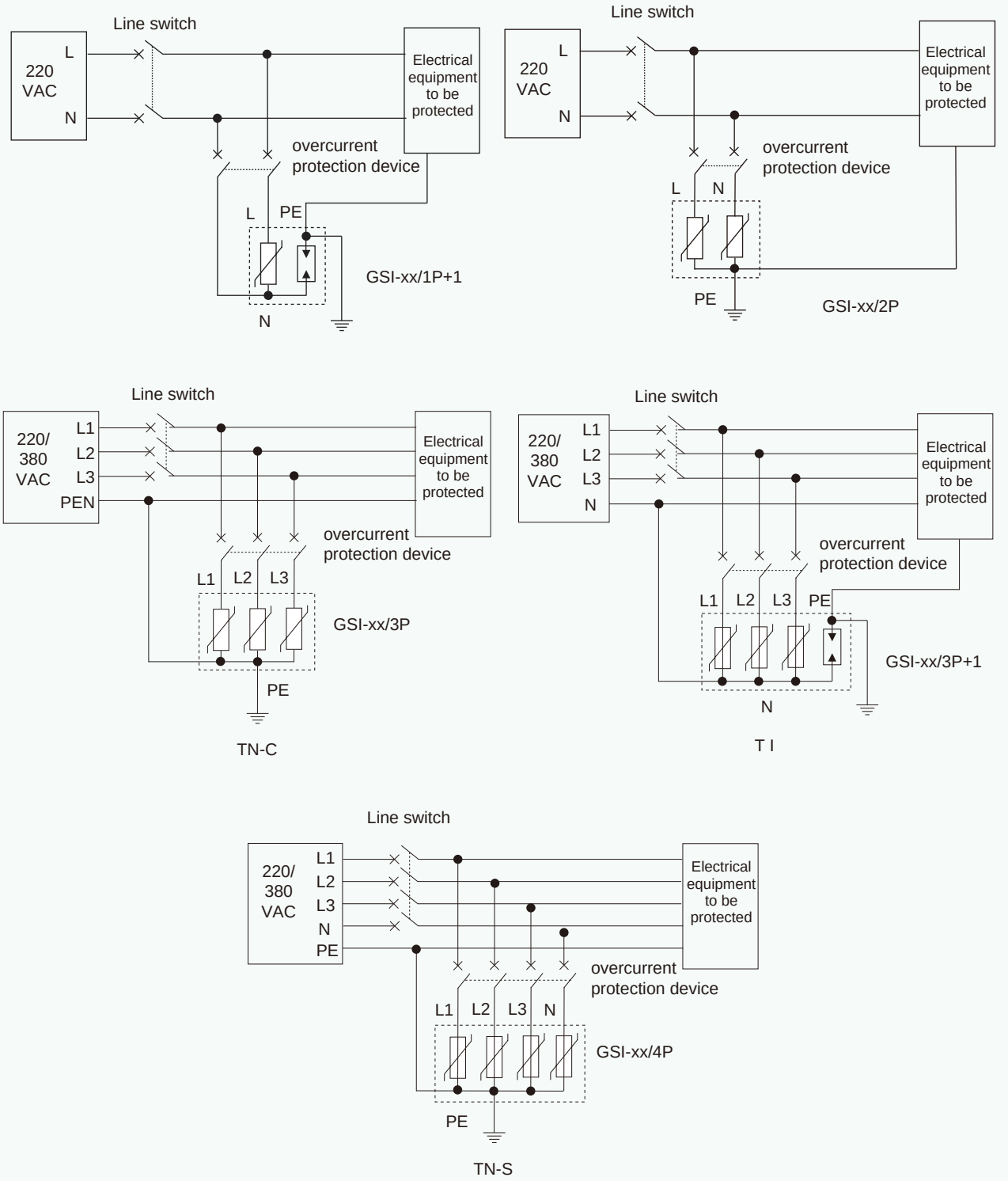

B.C.E. S.r.l. Via Regina Pacis, 54/c - I 41049 Sassuolo (MO) Tel.: (+39) 0536 811616 - Fax.: (+39) 0536 811500 e-mail: bce@bce.it - Website: www.bce.it

Industrial power supply

If electricity was the blood of modern industrial control system, power unit should be the heart. GSEE power units could keep control system working stably, and provide engineer with selection service and power solutions.

Excellent service

Strong performance

Parallel redundancy

Power unit is widely used in industrial automation system, military equipment, science & research equipment, LED lighting, industrial control equipment, communication equipment, power equipment, instrumentation, medical equipment, semiconductor, air purifier, refrigerator, LCD, LED lamps, audio equipment, secuirity monitoring, computer case and digital product industies.

B.C.E. S.r.l. Via Regina Pacis, 54/c - I 41049 Sassuolo (MO) Tel.: (+39) 0536 811616 - Fax.: (+39) 0536 811500 e-mail: bce@bce.it - Website: www.bce.it

MPU60 power

MPU 60 - 24 S

Wattage

12-12V output S-Screw Terminal Type

24-24V output

Wide range input 85~264VAC

Short circuit protection

The output voltage is adjustable through the knob

Filter built-in

150% Rated over load protection

3 Years Warranty

Order data		
Type	MPU60-12S	MPU60-24S
Input		
Rated input voltage	100V~240VAC	
input voltage range	85V~264VAC；90V~375VDC	
Input current	115VAC: 1060mA.；230VAC: 590mA< 1.9 mA	
Line frequency	47~63Hz	
Inrush current	20A@115VAC ；40A@230VAC	
Power dissipation (230Vh)	9.0W	7.8W
Leakage current	I/O：0.25mA ；Input/ ground： 3.5mA	
PFC (Passive)	-	
Output		
Output power	60W	60W
Output voltage/ Output precision	+12VDC/±0.5%	+24VDC/±0.5%
Output voltage range	12~14VDC	24~28VDC
Rated output current	5A	2.5A
Hold up time	20ms@115VAC ；30ms@230VAC	
Turn on time	1000ms	
Efficiency(min. ,typ.)	84%,86%	86%,89%
Protection		
Input fuse	internal T2A@250VAC	
Rated over load protection	110%~150%	
Over voltage protection	6.0~6.8V@5VDC；15~16.5V@12VDC；30~33V@24VDC；60~66V@48VDC	
Degree of protection	IP20	
General parameter		
Isolation voltage (input-output)	I/O 3000VAC , 4242VDC ; Input/ FG:1500VAC , 2121VDC ; Output/ FG : 500VAC, 710VDC	
Isolation resistance (input-output)	100MΩ	
Ambient temperature/Operating temperature	-40℃~+71℃/-40℃~85℃	
Relative humidity	≤95%,non condensating	
Weight	340g	
Installation	NS35 DIN RAIL	
SIZE(L*W*D)mm	90 x 40.5 x 114	

B.C.E. S.r.l. Via Regina Pacis, 54/c - I 41049 Sassuolo (MO) Tel.: (+39) 0536 811616 - Fax.: (+39) 0536 811500 e-mail: bce@bce.it - Website: www.bce.it

MPU120 power

MPU 120 - 24 S

Wattage

12-12V output S-Screw Terminal Type
24-24V output
48-48V output

PFC (Power Factor Correct) function
Input 115/230VAC self-adaption
Parallel function
SELV (safe extra low voltage)
The output voltage is adjustable through the knob
145% Rated over load protection
3 Years Warranty

Order data			
Type	MPU120-12S	MPU120-24S	MPU120-48S
Input			
Rated input voltage	115/230VAC (self-adaption)		
input voltage range	115VAC : 90V~132V ; 230VAC : 180V~264V		
Input current	115VAC: 2.2A. ; 230VAC: 0.83A(AL/BL mode 115VAC: 2.0A. ; 230VAC: 0.8A)		
Line frequency	47~63Hz		
Inrush current	24A@115VAC ; 48A@230VAC		
Power dissipation (230Vh)	24W	20W	19W
Leakage current	Input/Output 0.25mA ; Input/Ground 3.5mA		
PFC (Passive)	Typical value : 0.7		
Output			
Output power	120W	120W	120W
Output voltage/ Output precision	+12VDC/±1%	+24VDC/±1%	+48VDC/±1%
Output voltage range	11.4~14.5VDC	22.5~28.5VDC	45~55VDC
Rated output current	10A	5A	2.5A
Hold up time	25ms@115VAC ; 30ms@230VAC		
Turn on time	1000ms		
Efficiency(min. ,typ.)	82% , 84%	84%,86%	85%,87%
Protection			
Input fuse	internal T3.15A@250VAC		
Rated over load protection	110%~145% ; 102%~108%@AL(BL)		
Over voltage protection	15~16.8V@12VDC ; 30~33V@24VDC ; 60~63V@48VDC ; 24.5~25.5V@AL(BL)		
Degree of protection	IP20		
General parameter			
Isolation voltage (input-output)	I/O3000VAC , 4242VDC ; Input/ FG:1500VAC , 2121VDC ; Output/ FG : 500VAC, 710VDC		
Isolation resistance (input-output)	100MΩ		
Ambient temperature/Operating temperature	-35℃~+71℃/-40℃~85℃		
Relative humidity	≤95%,non condensating		
Weight	920g		
Installation	NS35 DIN RAIL		
SIZE(L*W*D)mm	124.5 x 64 x 123.6		

B.C.E. S.r.l. Via Regina Pacis, 54/c - I 41049 Sassuolo (MO) Tel.: (+39) 0536 811616 - Fax.: (+39) 0536 811500 e-mail: bce@bce.it - Website: www.bce.it

MPU240/300 Power

MPU 240 - 24 S

Wattage — 240

24-24V output
48-48V output — 24

S-Screw Terminal Type — S

PFC (Power Factor Correct) function
Input 115/230VAC self-adaption
Parallel function
SELV (safe extra low voltage)
The output voltage is adjustable through the knob
145% Rated over load protection
3 Years Warranty

Order data				
Type	MPU240 - 24S	MPU240 - 48S	MPU300 - 24S	MPU300 - 48S
Input				
Rated input voltage	115/230VAC self-adaption			
input voltage range	115VAC : 90V~132V ; 230VAC : 180V~264V			
Input current	115VAC: 4.0A. ; 230VAC: 1.55A		115VAC: 4.8A. ; 230VAC: 1.9A	
Line frequency	47~63Hz			
Inrush current	30A@115VAC ; 60A@230VAC		35A@115VAC ; 65A@230VAC	
Power dissipation (230Vh)	35W	32W	42W	40W
Leakage current	Input/Output 0.25mA ; Input/Ground 3.5mA			
PFC (Passive)	Typical value : 0.75			
Output				
Output power	240W	240W	300W	300W
Output voltage/ Output precision	+24VDC/±1%	+48VDC/±1%	+24VDC/±0.5%	+48VDC/±1%
Output voltage range	22.5~28.5VDC	47~56VDC	22.5~28.5VDC	47~56VDC
Rated output current	10A	5A	12.5A	6.25A
Hold up time	25ms@115VAC ; 30ms@230VAC			
Turn on time	1000ms			
Efficiency(min. ,typ.)	87%,89%	88%,90%	87%,89%	88%,90%
Protection				
Input fuse	internal T6.3A@250VAC		internal T8A@250VAC	
Rated over load protection	120%~145%			
Over voltage protection	30~33V@24VDC ; 60~63V@48VDC			
Degree of protection	IP20			
General parameter				
Isolation voltage (input-output)	I/O 3000VAC , 4242VDC ; Input/ FG:1500VAC , 2121VDC ; Output/ FG : 500VAC, 710VDC			
Isolation resistance (input-output)	100MΩ			
Ambient temperature/Operating temperature	- 40℃~+71℃/ - 40℃~85℃		- 30℃~+71℃/ - 40℃~85℃	
Relative humidity	≤95%,non condensating			
Weight	1380g		1400g	
Installation	NS35 DIN RAIL			
SIZE(L*W*D)mm	124.5 x 83.5 x 123.6			

B.C.E. S.r.l. Via Regina Pacis, 54/c - I 41049 Sassuolo (MO) Tel.: (+39) 0536 811616 - Fax.: (+39) 0536 811500 e-mail: bce@bce.it - Website: www.bce.it

MPU480 Power

MPU 480 - 24 S

Wattage

24-24V output

48-48V output

S-Screw Terminal Type

PFC (Power Factor Correct) function

Wide input voltage range : 90~264VAC

Parallel function

SELV (safe extra low voltage)

The output voltage is adjustable through the knob

145% Rated over load protection

3 Years Warranty

Order data		
Type	MPU480-24S	MPU480-48S
Input		
Rated input voltage	115/230VAC	
input voltage range	90V~264VAC	
Input current	115VAC: 4.9A. ; 230VAC: 2.5A	
Line frequency	47~63Hz	
Inrush current	25A@115VAC ; 50A@230VAC	
Power dissipation (230Vh)	63W	60W
Leakage current	Input/Output : 0.25mA ; Input/Ground : 3.5mA	
PFC (Passive)	0.99@115VAC ; 0.97@230VAC	
Output		
Output power	480W	480W
Output voltage/ Output precision	+24VDC/±1%	+48VDC/±1%
Output voltage range	22.5~28.5VDC	47~56VDC
Rated output current	20A	10A
Hold up time	25ms@115VAC ; 30ms@230VAC	
Turn on time	1000ms	
Efficiency(min. ,typ.)	86%,89%	87%,90%
Protection		
Input fuse	internal T10A@250VAC	
Rated over load protection	110%~145%	
Over voltage protection	30~33V@24VDC ; 60~63V@48VDC	
Degree of protection	IP20	
General parameter		
Isolation voltage (input-output)	I/O 3000VAC , 4242VDC ; Input/ FG:1500VAC , 2121VDC ; Output/ FG : 500VAC, 710VDC	
Isolation resistance (input-output)	100MΩ	
Ambient temperature/Operating temperature	-35℃~+71℃/-40℃~85℃	
Relative humidity	≤95%,non condensating	
Weight	1920g	
Installation	NS35 DIN RAIL	
SIZE(L*W*D)mm	124.5 x 175.5 x 123.6	

B.C.E. S.r.l. Via Regina Pacis, 54/c - I 41049 Sassuolo (MO) Tel.: (+39) 0536 811616 - Fax.: (+39) 0536 811500 e-mail: bce@bce.it - Website: www.bce.it

MPU960 Power

MPU 960 - 24 S

Wattage

24-24V output
48-48V output

S-Screw Terminal Type

3PH
SELV
Internal filter
Over temperature protection
The output voltage is adjustable through the knob
135% Rated over load protection
3 Years Warranty

Order data		
Type	MPU960 - 24S	MPU960 - 48S
Input		
Rated input voltage	3ph 380V/480VAC	
input voltage range	340V~575VAC ；480~820VDC	
Input current	400VAC: 1.72A. ；500VAC: 1.5A	
Line frequency	47~63Hz	
Inrush current	Typical value 30A；Max value 5A	
Power dissipation (230Vh)	98W	90W
Leakage current	Input/Output：0.25mA ；Input/Ground： 3.5mA	
PFC (Passive)	Typical value：0.8	
Output		
Output power	960W	
Output voltage/ Output precision	+24VDC/±1%	+48VDC/±1%
Output voltage range	22.5~28.5VDC	47~56VDC
Rated output current	40A	20A
Hold up time	15ms	
Turn on time	1000ms	
Efficiency(min. ,typ.)	90%,92%	91%,93%
Protection		
Input fuse	internal T5A@500VAC	
Rated over load protection	110%~135%	
Over voltage protection	30~33V@24VDC；60~63V@48VDC	
Degree of protection	IP20	
General parameter		
Isolation voltage (input-output)	I/O3000VAC , 4242VDC ; Input/ FG:1500VAC , 2121VDC ; Output/ FG : 500VAC, 710VDC	
Isolation resistance (input-output)	100MΩ	
Ambient temperature/Operating temperature	- 40℃~+71℃/ - 40℃~+85℃	
Relative humidity	≤95%,non condensating	
Weight	3400g	
Installation	NS35 DIN RAIL	
SIZE(L*W*D)mm	126.2 x 275.8 x 118.8	

B.C.E. S.r.l. Via Regina Pacis, 54/c - I 41049 Sassuolo (MO) Tel.: (+39) 0536 811616 - Fax.: (+39) 0536 811500 e-mail: bce@bce.it - Website: www.bce.it

Redundant system could improve the reliability and availability of DC voltage source. Add an “extra” power as “backup power” to complete redundant system, which could keep industrial system working normally when another powers happen defaults. Redundant power units coulde be isolated by redundant modules to avoid coupling between each other and achieve redundacy backup and monitoring.

Redudant module MPU-20 coulbe be mounted on DIN standard rail - small size, light weight, easy to install

MPU-20 could achieve flow equalization with power in parralel to prevent damage accured by long-period overloading of power, and prolong using life. Module accords to IEC60068-2-13 standard，could be used at altitude of 4850m with reliability and safety.

Advantage as following:

- Wide range of operation temperature: from -40°C to +71°C . Module could work under this conditions
- MTBF>650,000 hrs. The system could keep working for a long time without faults.
- Relay control. Display working status of system modules by using relay.
- Current output of single redundant module could reach 30A for keeping 300 seconds.

Connection

1+1 parrallel style - advantage: could reduce the quantity of modules used in system

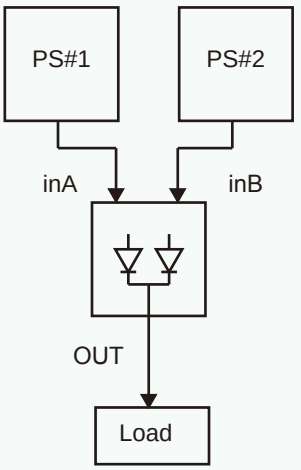

Single loop - advantage: could reduce voltage and current of module diode for improving using life. weakness: high cost, large area

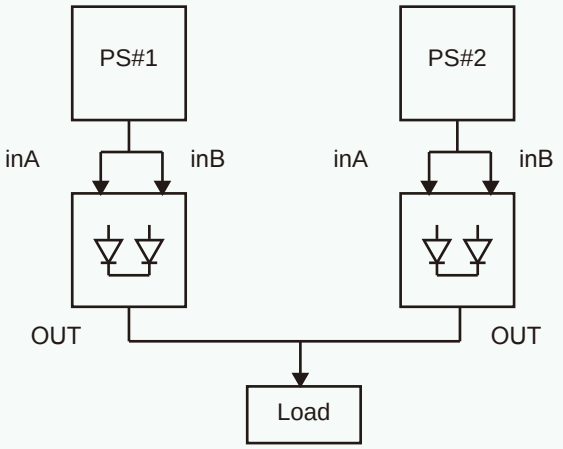

N+1 style - advantage: could increase the quantity of parallel powers and improve reliability of system

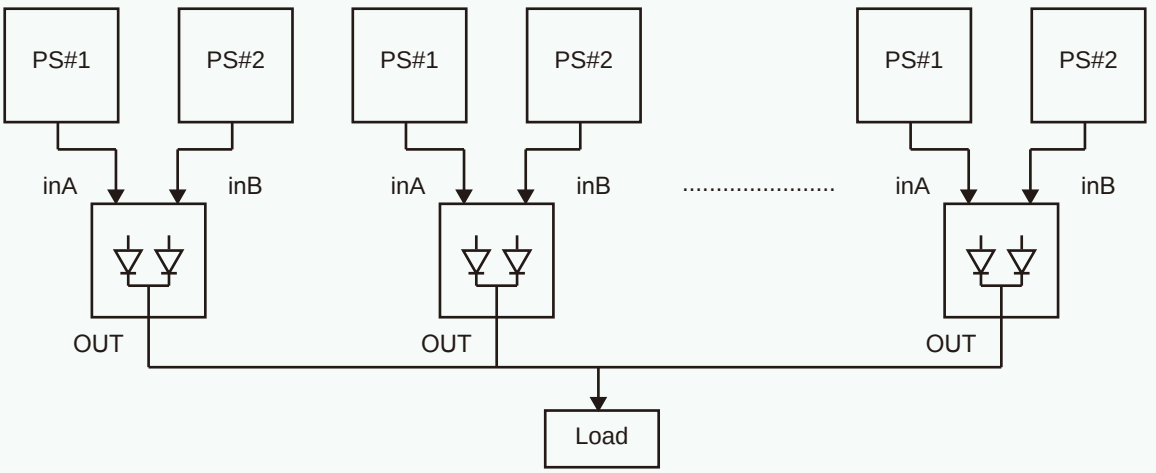

B.C.E. S.r.l. Via Regina Pacis, 54/c - I 41049 Sassuolo (MO) Tel.: (+39) 0536 811616 - Fax.: (+39) 0536 811500 e-mail: bce@bce.it - Website: www.bce.it

Power Redundant system

MPU-20

Applicable to 24V power system redundancy operation

Max output current : 20A

Reyly contacts feedback the state of power supply

LED indicator for input fault alarm

Order data	
Type	MPU-20
Input	
Rated input voltage	24VDC
input voltage range	21~28VDC
The number of input	2
Rated input current	10A
Max. input current	15A/Chanal,Max continuous 300s
Output	
Output voltage drop Vin-Vout	0.5V
Output current	20A
Maximum output current	30A Max continuous 300s
Maximum reverse voltage	30V
DC ON Indicator light	Green indicator light means normal
General parameter	
Isolation voltage (input-output)	100VDC
Isolation resistance (input-output)	100MΩ@100VDC
Ambient temperature/Operating temperature	-40℃~+71℃/-40℃~85℃
Relative humidity	≤90%RH , non condensating
Weight	340g
Installation	NS35 DIN RAIL
SIZE(L*W*D)mm	90 × 54 × 114

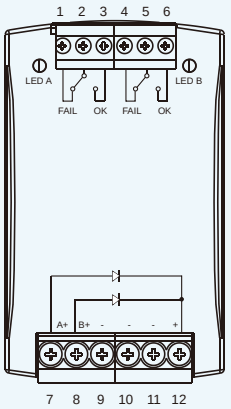

Input : 7 - A+
8 - B+

Negative pole : 9 - 0V
10 - 0V
11 - 0V

Output : 12 - 24V

Power state feedback : 1 - A power FAIL
2 - COM A
3 - A power O.K
4 - B power FAIL
5 - COM B
6 - B power O.K

B.C.E. S.r.l. Via Regina Pacis, 54/c - I 41049 Sassuolo (MO) Tel.: (+39) 0536 811616 - Fax.: (+39) 0536 811500 e-mail: bce@bce.it - Website: www.bce.it

B.C.E. S.r.l. Via Regina Pacis, 54/c - I 41049 Sassuolo (MO) Tel.: (+39) 0536 811616 - Fax.: (+39) 0536 811500 e-mail: bce@bce.it - Website: www.bce.it

B.C.E. S.r.l. Via Regina Pacis, 54/c - I 41049 Sassuolo (MO)
Tel.: (+39) 0536 811616 - Fax.: (+39) 0536 811500
e-mail: bce@bce.it - Website: www.bce.it

grafiche zanichelli sassuolo

B.C.E. ELECTRONICS
Importation & Distribution
Electronic Components

B.C.E. s.r.l.
Via Regina Pacis, 54/c - 41049 SASSUOLO (MO) Italy
Tel. +39 0536 811.616 r.a. - Fax +39 0536 811.500
www.bce.it - E-mail: bce@bce.it

SYSTEM CERTIFICATION
ISO 9001
SGS