B.C.E. ELECTRONICS

KEL GENERAL CATALOG

CONNECTOR
SWITCHES

QMS、EMS
JIS Q 9001, JIS Q 14001
JSAQ064, JSAE532

JAB
CM001

Micro Coaxial Cable Connector

A connector for a micro coaxial cable requires various aspects, such as connection reliability, bendability of the cable immediately before the connector, transmission characteristics, and stable quality, to be taken into account. KEL has developed connectors that satisfy the various aspects ahead of the others in the industry. The 0.5 and 0.4 mm pitch connectors that we developed and commercialized have been used in a wide variety of devices and equipment. Their reliability, quality, and stability have been highly appreciated.

Furthermore, we have launched a 0.25 mm pitch connector, one of the smallest in the industry, using the most sophisticated part of our skills and techniques that have been cultivated. By providing such products with a very small body, high reliability, advanced performance, and good stability for a low rejection rate, we contribute to the cutting-edge technology in electronics.

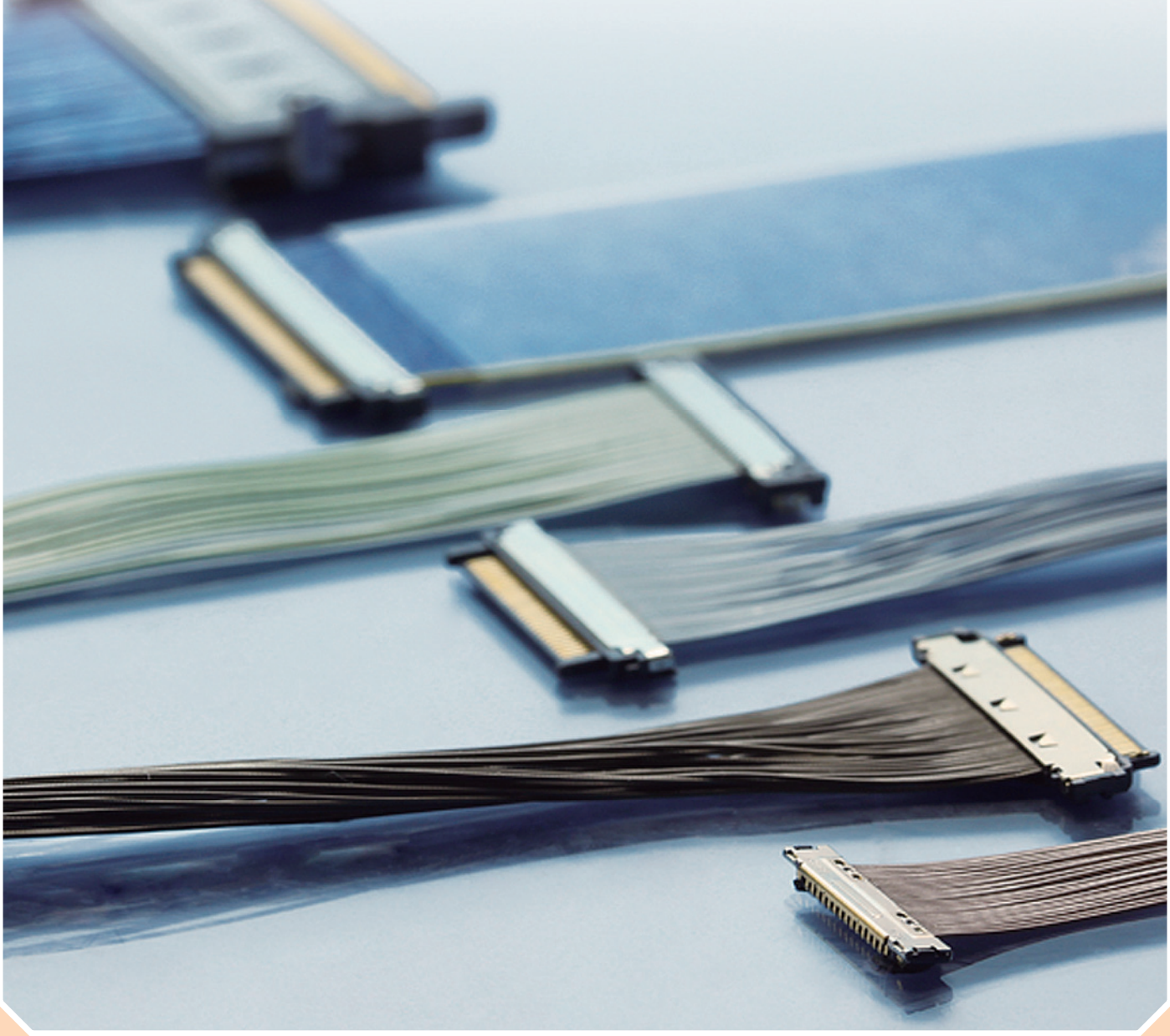

For more information, please refer to page 103 or later.

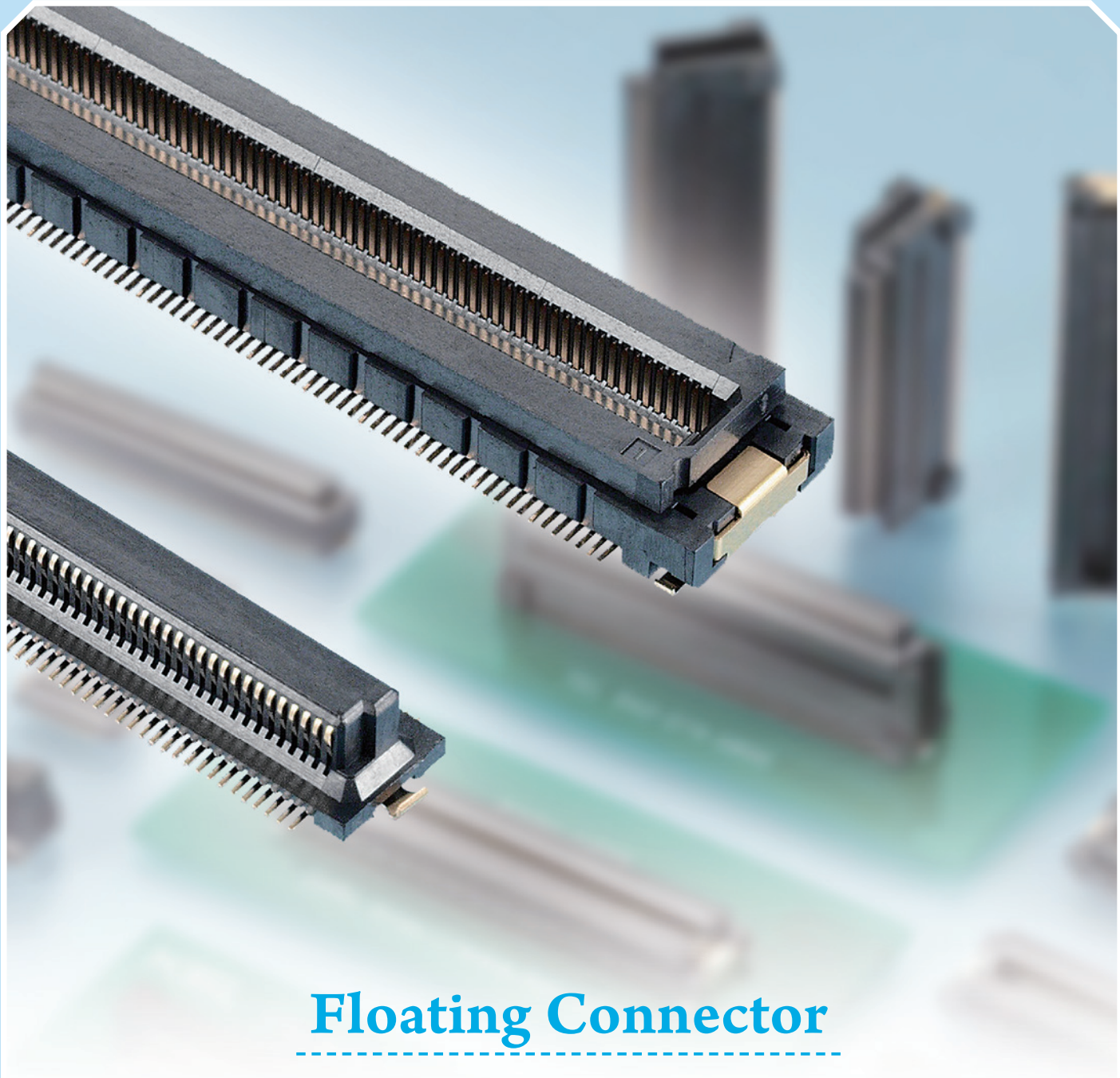

Floating Connector

A floating connector that absorbs the misalignment is the solution to misalignment in mating for Board to Board connection. It is best suited for an application where there is a concern of a large burden applied to a connector, such as in a case of a screwed printed circuit board, multiple connectors used next to each other, or PCB assembly.
KEL's DY/DT Series products are 0.5 mm pitch connectors that offer high floating performance, allowing to float ±0.5mm in X and Y directions. In other words, they are full-fledged fine pitch floating connectors.
Under the current circumstances where connectors with a larger number of pins in a smaller body are demanded, our floating connectors have been downsized while holding a floating structure and have achieved a high pin count up to 240.
The technical achievement is purely built on the high component precision that we have raised to an ultimate level.
With the compactness, high pin count, and wide variety combined with the floating structure, KEL' full-fledged floating connectors will certainly satisfy your demands.

☞ For more information, please refer to page 2 or later.

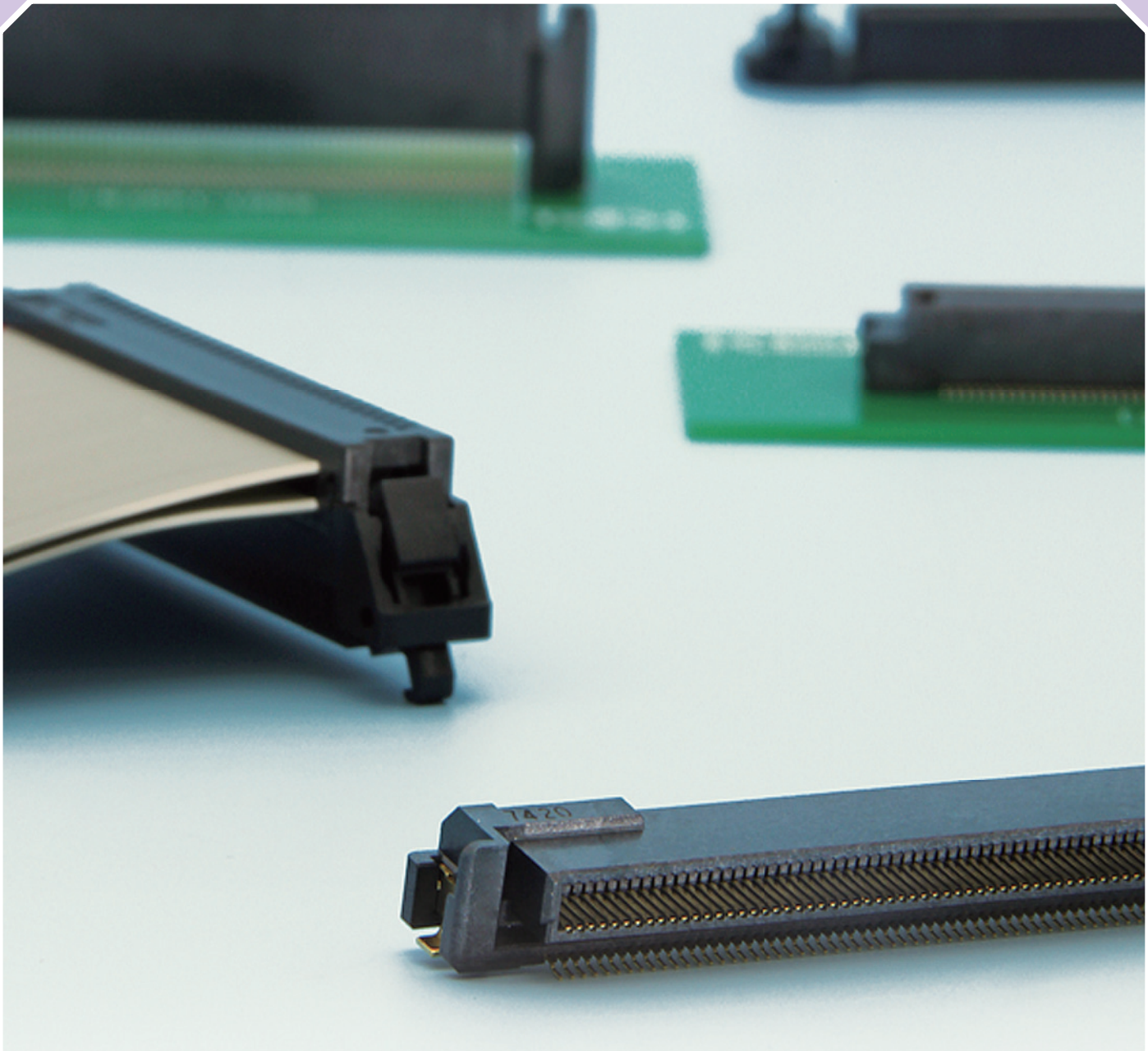

0.635mm Pitch Connector

As an expert of industrial connectors, KEL has accumulated know-how while placing a priority on high reliability and advanced performance that are required by industrial equipment. The products developed under such circumstances are 86 Series 0.635 mm pitch connectors. The 86 Series products are best suited for those who seek further compactness, larger pin count, application in SMT, and higher reliability of industrial connectors.

The connectors are capable of mating in three variations (stacked, horizontal, and vertical) for Board to Board connection. In addition, provided with Board to Cable connector, a connection to either of cable-side and board-side connectors are allowed with higher flexibility in combinations.

We, at KEL, confidently recommend the 86 Series, which features the compactness, high pin count, application in SMT, high reliability, as well as flexible combinations, as a connector for your industrial equipment.

☞ For more information, please refer to page 20 or later and page 152 or later.

Drawer Connector

Properly keeping up with the market trend and customer needs, KEL develops connectors with new and unique features.
The new crimp-type cable connector is one of those developed while placing a priority on customer needs and featuring unique characteristics.
The FA/FAS Series crimp-type cable connectors are drawer connectors completely different from the conventional crimp-type connectors. They feature a floating mechanism, guide mechanism, prevention of buckling of the contact pins, mechanism allowing contact with a time lag, twin-leaf pinching 2 point contact, etc. Please note that the drawer mechanism was taken into account to a maximum extent to achieve the highest level of performance such as contact reliability and durability for insertion/removal.
We proudly offer you the FA/FAS Series products that are capable of solving the challenges in conventional drawer connectors in the market. We are certain that they will satisfy your needs.

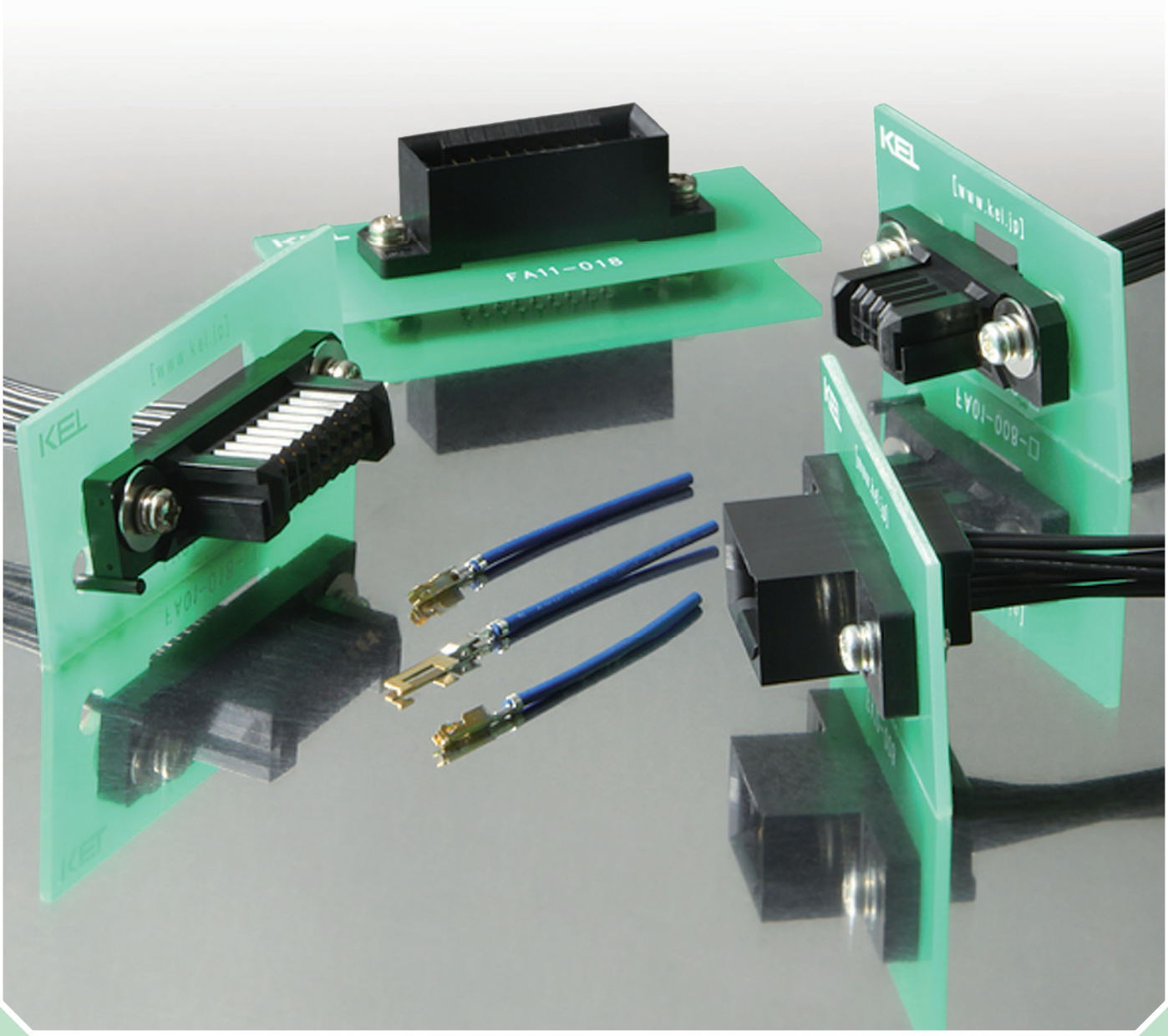

For more information, please refer to page 136 or later.

KEL GENERAL CONTENTS

B.C.E. ELECTRONICS

Board to Board Connectors 1

Floating Connectors

◆0.4mmPitch Floating Connector
DU Series 2

◆0.5mm Pitch Floating Connector for High-Speed Transmission
DT Series 6

◆0.5mm Pitch Floating Connector
DY Series 13

0.635mm Pitch Connectors

◆0.635mm Pitch Connector
8600 Series 20

◆0.635mm Pitch Connector/ Ejector Type
8602E Series 27

1mm Pitch Connectors

◆1mm Pitch Connector
87 Series 30

◆1mm Pitch Connector for Removable Media Device
DJ Series 35

1.27mm Pitch Connectors

◆1.27mm Pitch Low Profile Connector / SMT Type
8900MS Series 42

◆1.27mm Pitch Low Profile Connector
8900 Series 46

◆1.27mm Pitch Low Profile Connector / Flexible Straight Type
8903N-FS Series 54

◆1.27mm Pitch Connector
8800 Series 56

◆1.27mm Pitch Connector / Flexible Straight Type
8832E-FS Series 71

◆1.27mm Pitch Connector / Multi-Pin Type
8806 / 8807 Series 73

Standard-Compliant Connectors

◆2.54mm Pitch Connector / Conforms to Standard DIN
8300 / 8400 Series 83

Card Edge Connectors

◆**Card Edge Connector** 96

Board to Cable Connectors 101

KEL's Customized Harnesses 102

Micro Coaxial Cable Connectors

◆0.25mm Pitch Connector for Micro Coaxial Cable
XSL Series 103

◆0.25mm Pitch Connector for Micro Coaxial Cable (Stacking Type)
XSLS Series 106

◆0.4mm Pitch Connector for Micro Coaxial Cable
USL Series 110

◆0.4mm Pitch Connector for Micro Coaxial Cable (Stacking Type)
USLS Series 114

◆0.4mm Pitch Connector for Micro Coaxial Cable / Soldered Connection (Stacking Type)
USLS21 Series 118

◆0.5mm Pitch Connector for Micro Coaxial Cable
SSL Series 121

◆0.5mm Pitch Connector for Micro Coaxial Cable / for High-Speed Differential Transmission
TMC Series 126

Crimp Connectors

◆1.27mm Pitch Connector for Discrete Cable / Crimp Type
8929E Series 130

◆5.08mm Pitch Drawer Connector / Two Cables Crimpable Type
FTC Series 136

◆1.5mm Pitch Drawer Connector
FAS Series 139

◆2.5mm Pitch Drawer Connector
FA Series 144

◆2mm Pitch Connector for Discrete Cable / Crimp Type
FBC Series 149

Flat Cable Connectors

◆0.635mm Pitch Connector for 0.635mm Pitch Flat Cable
8622E Series 152

◆1.27mm Pitch Low Profile Connector for 0.635mm Pitch Flat Cable
8925E Series 156

◆1.27mm Pitch Connector for 0.635mm Pitch Flat Cable
8825E Series 170

◆1.27mm Pitch Connector for 1.27mm Pitch Flat Cable
8822E / 8822 Series 179

Interface Connectors 191

KEL's Customized Harnesses 192

Interface Connectors

◆1.27mm Pitch I/O Connector
8840 / 8850 / 8855 Series 193

Sockets & Switches 209

IC Connectors

◆Shrink IC Connector
SIC01 Series 210

◆Dual Inline Connector
ICC05 Series 212

◆SO-DIMM Connector
DM03/ 04 Series 214

Card Connectors

◆ISO IC Card(Smart Card) Connector / Landing Contact Type
ISC Series 216

Switches

◆Rotary DIP Code Switch
KDS Series 220

◆DIP Shorting Plug
DSP Series 222

Battery Connectors 225

Terminal Block Connectors

◆Terminal Block Connector
7010 / 7011 / 7030 / 7040 Series 226

Battery Connectors

◆5mm Pitch / 3mm Pitch 1 Piece Battery Connector
GC / GD Series 233

◆2mm Pitch 2 Piece Battery Connector
GF Series 239

Application Notes 250

APPENDIX
RACK PRODUCT
..... APPENDIX 1～APPENDIX 7

KEL GENERAL INDEX

	Series	Description	Page
1	1168	Card Edge Connector	96~99
	1258N		
4	4640	Card Edge Connector	96~99
	4820		
7	7010	Terminal Block Connector	226~232
	7011		
	7030		
	7040		
8	8300	2.54mm Pitch Connector / Conforms to Standard DIN	83~95
	8301		
	8311		
	8330		
	8331		
	8341		
	8400		
	8401		
	8431		
	8440		
	8601	0.635mm Pitch Connector	20~29
	8611		
	8611H		
	8602E		
	8630E		
	8622E	0.635mm Pitch Connector for 0.635mm Pitch Flat Cable	152~155
	8630E		
	87BFN	1mm Pitch Connector	30~34
	87BMN		
	8800	1.27mm Pitch Connector	56~82
	8801		
	8802		
	8803		
	8806		
	8807		
	8810		
	8811		
	8812		
	8813		
	8816		
	8817		
	8832E		
	8822	1.27mm Pitch Connector for 1.27mm Pitch Flat Cable	179~189
	8822E		
	8830		
	8830E		
	8831		
	8831E		

	Series	Description	Page
8	8825E	1.27mm Pitch Connector for 0.635mm Pitch Flat Cable	170~178
	8825R		
	8830E		
	8831E		
	8840	1.27mm Pitch I/O Connector	193~208
	8850		
	8855		
	8901	1.27mm Pitch Low Profile Connector	42~55
	8903		
	8903MS		
	8903N-FS		
	8911		
	8913		
	8913MS		
	8925	1.27mm Pitch Low Profile Connector for 0.635mm Pitch Flat Cable	156~169
	8925E		
	8925R		
	8930E		
	8931E		
	8929E	1.27mm Pitch Connector for Discrete Cable / Crimp Type	130~135
	8930E		
	8931E		
#	#566	Contact Terminal for FA Series	144~148
	#570		
	#569	Contact Terminal for 8929E Series	130~135
	#587	Contact Terminal for FBC Series	149~151
	#597	Contact Terminal for FAS Series	139~143
	#615		
	#625	Contact Terminal for FTC Series	136~138

KEL GENERAL INDEX

B.C.E. ELECTRONICS

	Series	Description	Page
D	DJ03	1mm Pitch Connector for Removable Media Device	35~41
	DJ04		
	DJ33		
	DJ34		
	DM03	SO-DIMM Connector	214~215
	DM04		
	DSP01	DIP Shorting Plug	222~223
	DSP02		
	DSP03		
	DU00	0.4mm Pitch Floating Connector	2~5
	DU01		
	DU10		
	DU11		
	DT00	0.5mm Pitch Floating Connector for High-Speed Transmission	6~12
	DT01		
	DT10		
	DT11		
	DY00	0.5mm Pitch Floating Connector	13~19
	DY01		
	DY10		
	DY11		
F	FA01	2.5mm Pitch Drawer Connector	144~148
	FA11		
	FA12		
	FAS01	1.5mm Pitch Drawer Connector	139~143
	FAS11		
	FBC01	2mm Pitch Connector for Discrete Cable / Crimp Type	149~151
	FBC11		
	FTC01	5.08mm Pitch Drawer Connector / Two Cables Crimpable Type	136~138
	FTC11		
G	GC02	5mm Pitch 1 Piece Battery Connector	233~238
	GC11		
	GD01	3mm Pitch 1 Piece Battery Connector	233~238
	GD02		
	GF01	2mm Pitch 2 Piece Battery Connector	239~249
	GF02		
	GF11		
	GF12		
	GF21		
	GF22		
	GF31		
I	ICC05	Dual Inline Connector	212~213
	ISC3	ISO IC Card(Smart Card) Connector / Landing Contact Type	216~219
	ISC5		
K	KDS	Rotary DIP Code Switch	220~221
S	SIC01	Shrink IC Connector	210~211
	SSL00	0.5mm Pitch Connector for Micro Coaxial Cable	121~125
	SSL01		
	SSL20		

	Series	Description	Page
T	TMC01	0.5mm Pitch Connector for Micro Coaxial Cable / for High-Speed Differential Transmission	126~129
	TMC21		
U	USL00	0.4mm Pitch Connector for Micro Coaxial Cable	110~120
	USL20		
	USLS00		
	USLS20		
	USLS21		
X	XSL00	0.25mm Pitch Connector for Micro Coaxial Cable	103~109
	XSL20		
	XSLS00		
	XSLS01		
	XSLS20		

【JIG】

Series	Description	Page
CA-10-□	Cable Assembly Base for Discrete Wire (8840/8855)	208
CA-30	Cable Assembly Base for Laminated Wire (8840/8855)	208
CH-01	Cable Crimping Hand Tool for #566	145
CH-02	Cable Crimping Hand Tool for #566/#570	145
CH-03	Cable Crimping Hand Tool for #569	131
CH-04	Cable Crimping Hand Tool for #570	145
CH-05	Cable Crimping Hand tool for #597	140
CH-07	Cable Crimping Hand tool for #625	137
CH-08		
CH-09		
CH-10	Cable Crimping Hand tool for #615	140
CH-11		
CT-14	Cable Terminator for 8840/8855	208
CT-15	Common Cable Terminator	169・178 189
HP-12	Common Hand press	169・178 189・208
LF-21	Cable Assembly Tools for 8822□	189
LF-22	Cable Assembly Tools for 8825□	178
LF-30-□	Cable Assembly Tools for 8840/8855	208
LF-40	Cable Assembly Tools for 8925□	169
ST-10	Sliding Base for 8840/8855	208

BOARD TO BOARD CONNECTORS

- DU SERIES
- DT SERIES
- DY SERIES
- 8600 SERIES
- 8602E SERIES
- 87 SERIES
- DJ SERIES
- 8900MS SERIES
- 8900 SERIES
- 8903N-FS SERIES
- 8800 SERIES
- 8832E-FS SERIES
- 8806/8807 SERIES
- 8300/8400 SERIES
- CARD EDGE CONNECTORS

DU SERIES

0.4mm PITCH FLOATING CONNECTOR

RoHS Compliant

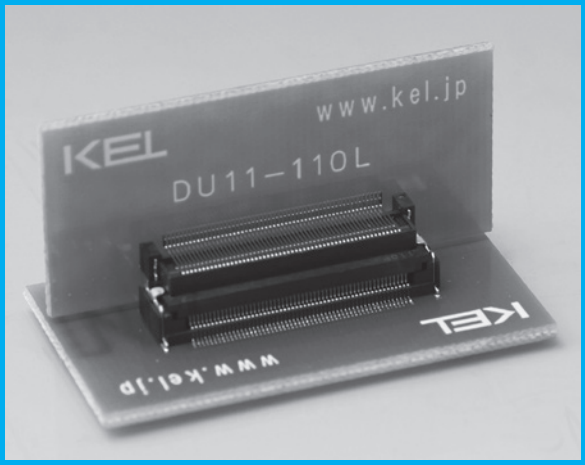

FEATURES

- Location error offsets ±0.4mm in the XY direction.
- High reliable design with effective mating length of 1.2mm(0.047").
- Connectors in a vertical mating type are currently offered.
  *Stacked mating type is under development.
- Downsizing of mounting footprint by 48% for a plug and 31% for a receptacle, compared to our DY Series (0.5 mm pitch connector).
- Highly reliable contact performance has been achieved by providing box-shaped insulator to protect the contacts.
- Due to that the bottom of receptacle connector is covered with resin, circuit may be printed under the connector.
- Provided with or without an anti-dust tape.
- Suction surface ensured for automatic mounting. (DU1□)

ORDER CODE

DU0□-□□□SB

① ② ③

*Please order in multiples of the quantity per package.

① 【Type】 Receptacle **DU00 :** Without positioning posts **DU01 :** With positioning posts

② 【Number of contacts】 **080 :** 80 pin **110 :** 110 pin **120 :** 120 pin **200 :** 200 pin

③ 【Contact tail style】 **SB :** Straight

ORDER CODE

DU1□-□□□LB

① ② ③

*Please order in multiples of the quantity per package.

① 【Type】 Plug **DU10 :** Without positioning posts **DU11 :** With positioning posts

② 【Number of contacts】 **080 :** 80 pin **110 :** 110 pin **120 :** 120 pin **200 :** 200 pin

③ 【Contact tail style】 **LB :** Right angle

SPECIFICATIONS

Material and plating	
Insulator material	Glass-filled LCP(UL94V-0), Black
Contact material	Copper alloy
Contact plating	Gold over Nickel
Retention clip material	Copper alloy
Retention clip plating	Tin over Nickel

Electrical Characteristics	
Current rating	0.4A per contact (Limited pins depending on the number of contacts)
Contact resistance	100mΩ max.
Dielectric withstanding voltage	200V AC for 1 minute
Insulation resistance	100MΩ min. at 250V DC
Operating temperature	-40°C to +85°C

Floatinng Structure

When the connector is mounted on the printed circuit board, a location error in the two directions of horizontal and vertical (XY direction) may occur at both connectors. In addition, if each printed circuit board is fixed to a case by screws after mating connectors, the connectors may have to compensate for the location error because a gap occurs during screwing the printed circuit board. A connector having a tolerance to compensate for such an error or gap caused by vibration is called a floating connector.
The DU series is a 0.4mm(0.016'') fine pitch connector with ±0.4mm(0.016'') floating structure and ensures sufficient compensation for location errors.

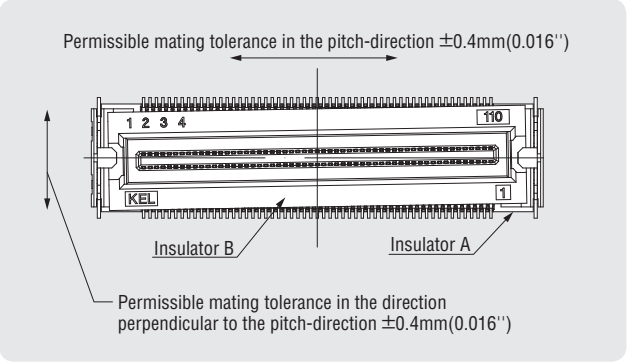

Mating Drawing

Unit : mm(inch)

◆**Vertical Mating**

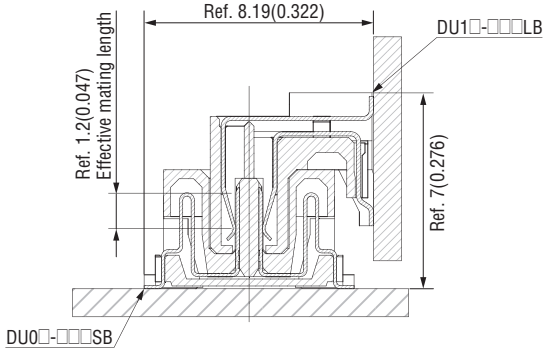

DU0□-□□□SB (Receptacle, Straight)

Unit : mm(inch)

Printed Circuit Board Layout (Component Side View)

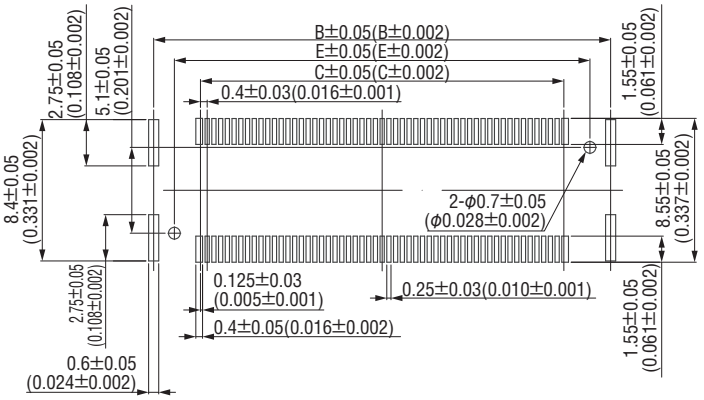

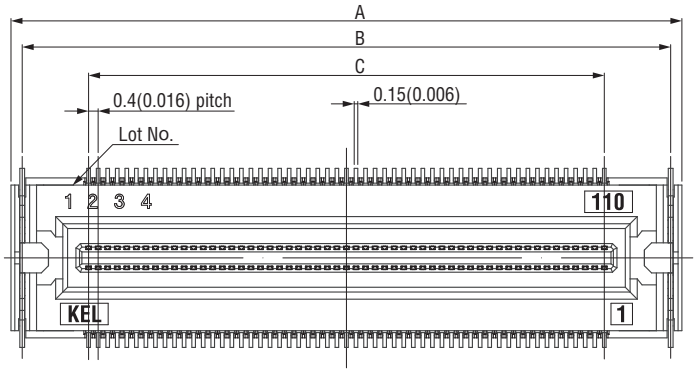

X-X′Cross Section

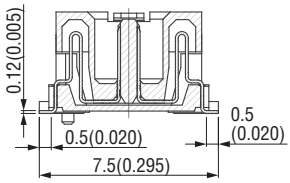

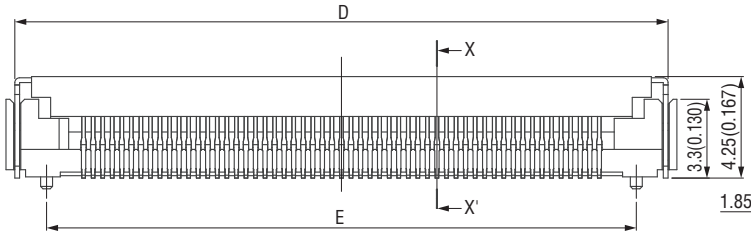

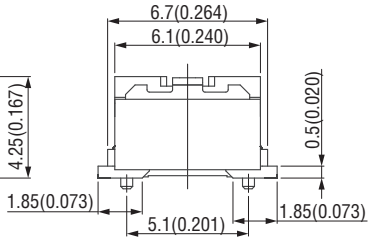

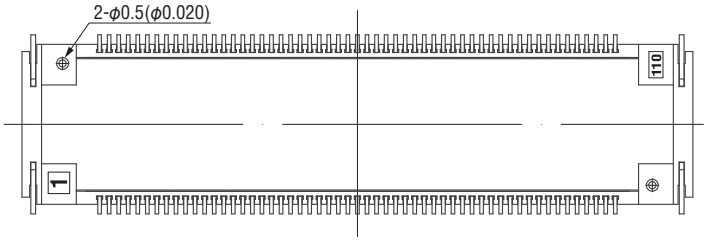

Packaging style
Embossed tape

Product Table / Dimensions

No. of contacts	Part Number	A	B	C	D	E	Number of packaging
80	DU0□-080SB	22.1 (0.870)	21.16 (0.833)	15.6 (0.614)	21.36 (0.841)	18.7 (0.736)	1,000
110	DU0□-110SB	28.1 (1.106)	27.16 (1.069)	21.6 (0.850)	27.36 (1.077)	24.7 (0.972)	1,000
120	DU0□-120SB	30.1 (1.185)	29.16 (1.148)	23.6 (0.929)	29.36 (1.156)	26.7 (1.051)	1,000
200	DU0□-200SB	46.1 (1.815)	45.16 (1.778)	39.6 (1.559)	46.36 (1.825)	42.7 (1.681)	1,000

DU1□-□□□LB (Plug, Right angle)

Unit : mm(inch)

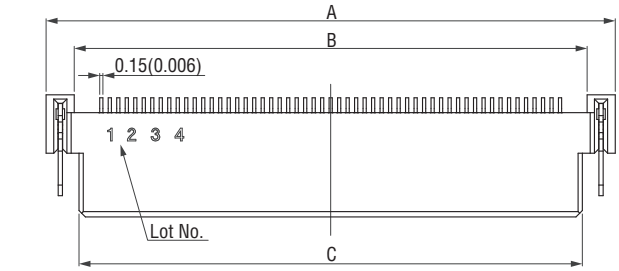

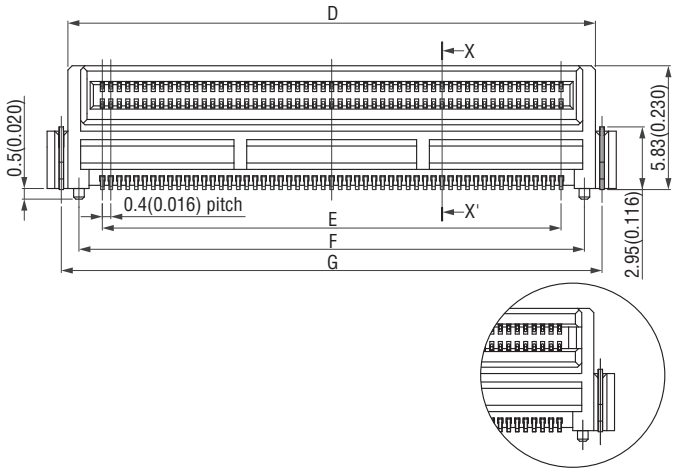

Printed Circuit Board Layout (Component Side View)

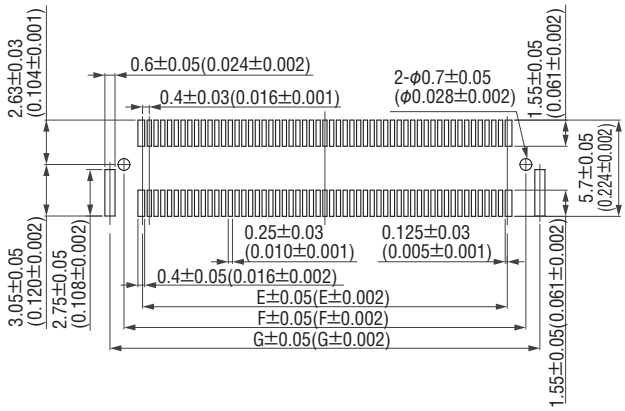

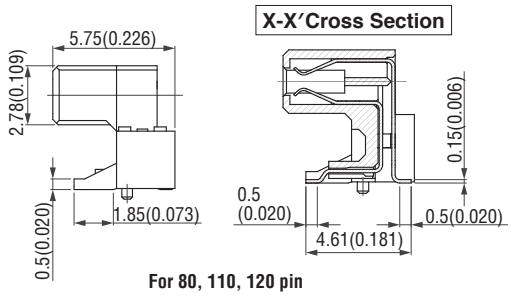

For 80, 110, 120 pin

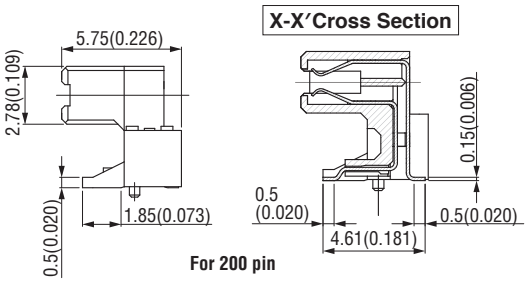

For 200 pin

Packaging style
Embossed tape

Product Table / Dimensions

No. of contacts	Part Number	A	B	C	D	E	F	G	Number of packaging
80	DU1□-080LB	20.8 (0.819)	18.15 (0.715)	17.7 (0.697)	18.84 (0.742)	15.6 (0.614)	17.8 (0.701)	19.46 (0.766)	1,000
110	DU1□-110LB	26.8 (1.055)	24.15 (0.951)	23.7 (0.933)	24.84 (0.978)	21.6 (0.850)	23.8 (0.937)	25.46 (1.002)	1,000
120	DU1□-120LB	28.8 (1.134)	26.15 (1.030)	25.7 (1.012)	26.84 (1.057)	23.6 (0.929)	25.8 (1.016)	27.46 (1.081)	1,000
200	DU1□-200LB	44.8 (1.764)	42.15 (1.659)	41.7 (1.642)	42.84 (1.687)	39.6 (1.559)	41.8 (1.646)	43.46 (1.711)	1,000

DT SERIES

RoHS Compliant

0.5mm PITCH FLOATING CONNECTOR FOR HIGH-SPEED TRANSMISSION

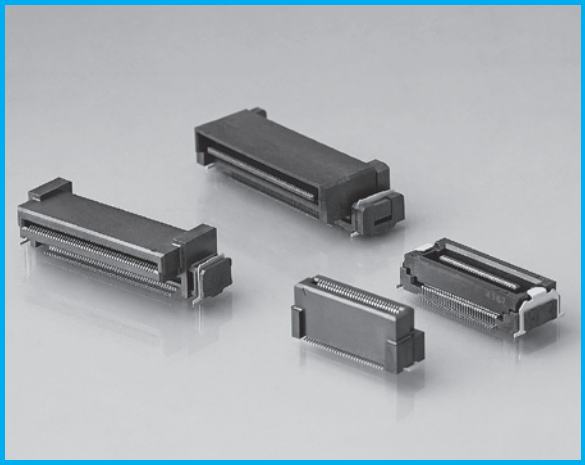

FEATURES

- High-speed serial transmission in the SATA standard level is supported, satisfying all the transmission characteristics required by the SATA Rev 3.0.
- Floating amount ±0.5mm in both X and Y directions.
- The effective mating length of stacked and vertical connection is 1.5mm(0.059"), The effective mating length of the horizontal connection is 1.7mm(0.067").
- 3 Variations for Stacked / Vertical / Horizontal mating.
- Wide variations of stacked mating heights of 10,17,18,19 and 20mm. (0.394, 0.669, 0.709, 0.748, 0.787") * Stacked mating height of 25mm is under development.
- Wide variations of contacts (30, 40, 60, 80, 100, 140, and 240 pins) are available.* Additional number of contact variations are under development.
- Arc-shaped contacts prevent foreign matters which may cause mating error.

ORDER CODE

DT0□-□□□ □-□□-□

① ② ③ ④ ⑤

*Please order in multiples of the quantity per package.

① 【Type】 Receptacle **DT00 :** Without positioning posts **DT01 :** With positioning posts

② 【Number of contacts】 **030 :** 30 pin **040 :** 40 pin **060 :** 60 pin **080 :** 80 pin **100 :** 100 pin **140 :** 140 pin **240 :** 240 pin (Only S type)

③ 【Contact tail style】 **S :** Straight **L :** Right angle

④ 【Packaging style】 **Omit :** Embossed tape (tape&reel) **TR :** Tray (S type : 240 pin, L type : 140 pin)

⑤ 【Anti-dust tape】 **T :** With anti-dust tape (S type) **Omit :** Without anti-dust tape (L type)

ORDER CODE

DT1□-□□□ □-□□-□□-□

① ② ③ ④ ⑤ ⑥

*Please order in multiples of the quantity per package.

① 【Type】 Plug **DT10 :** Without positioning posts **DT11 :** With positioning posts

② 【Number of contacts】 **030 :** 30 pin **040 :** 40 pin **060 :** 60 pin **080 :** 80 pin **100 :** 100 pin **140 :** 140 pin **240 :** 240 pin (Stacked height 10mm)

③ 【Contact tail style】 **S :** Straight **L :** Right angle

④ 【Stacked height】 (S type) **10 :** 10mm(0.394") **17 :** 17mm(0.669") **18 :** 18mm(0.709") **19 :** 19mm(0.748") **20 :** 20mm(0.788")

⑤ 【Packaging style】 **Omit :** Embossed tape (Tape&Reel) **TR :** Tray (S type : 240 pin, L type : 140 pin)

⑥ 【Anti-dust tape】 **T :** With anti-dust tape (S type) **Omit :** Without anti-dust tape (L type)

SPECIFICATIONS

Material and plating	
Insulator material	Glass-filled LCP(UL94V-0), Black
Contact material	Copper alloy
Contact plating	Gold over Nickel
Retention clip material	Copper alloy
Retention clip plating	Tin over Nickel

Electrical Characteristics	
Current rating	0.4A per contact
Contact resistance	80mΩ max.
Dielectric withstanding voltage	200V AC for 1 minute
Insulation resistance	100MΩ min. at 250V DC
Operating temperature	-40°C to +105°C

*Regarding the rated current of the DT series, it is possible to design a current capacity exceeding the standard 0.4 A / pin. i.e. 0.5 A / pin.
Please contact your local KEL sales office.

Floating Structure

When the connector is mounted on the printed circuit board, a position error in the two directions of horizontal and vertical (XY direction) may occur at both connectors. In addition, if each printed circuit board is fixed to a case by screws after mating connectors, the connectors may have to compensate for the position error because a gap occurs during screwing the printed circuit board. A connector having a tolerance to compensate for such an error or gap caused by vibration is called a floating connector.

The DT series is a 0.5mm(0.020'') fine pitch connector with ±0.5mm(0.020'') floating structure and ensures sufficient compensation for position errors.

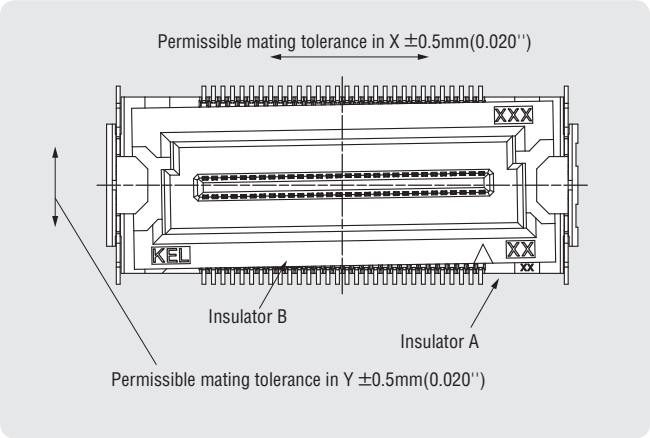

Mating Drawing

Unit : mm(inch)

◆Vertical Mating

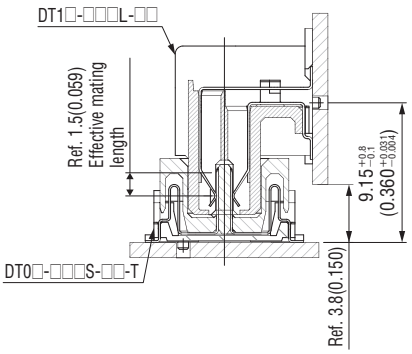

◆Horizontal Mating

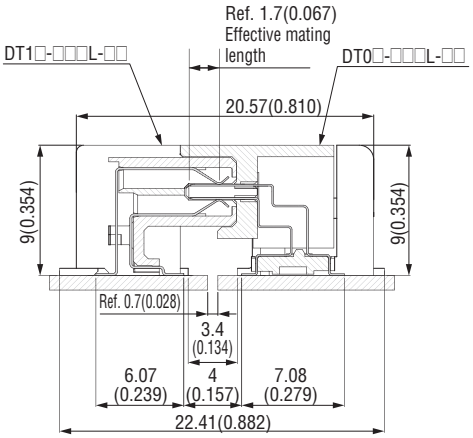

◆Stacked Mating

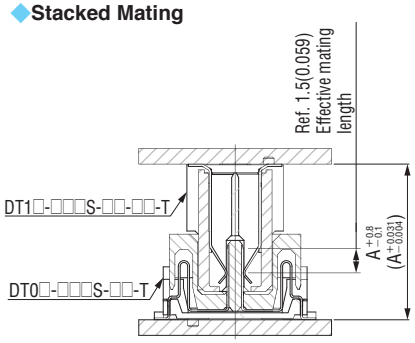

Part Number	A
DT1□-□□□S-10-□□-T	10(0.394)
DT1□-□□□S-17-T	17(0.669)
DT1□-□□□S-18-T	18(0.709)
DT1□-□□□S-19-T	19(0.748)
DT1□-□□□S-20-T	20(0.787)

Mating Matrix

Order Code		Receptacle	
		DT0□-□□□S-□□-T	DT0□-□□□L-□□
Plug	DT1□-□□□S-□□-□□-T	Stacked Mating (Stacked Height : 10mm(0.394), 17mm(0.669), 18mm(0.709), 19mm(0.748), 20mm(0.787))	—
	DT1□-□□□L-□□	Vertical Mating	Horizontal Mating

DT0□-□□□S-□□-T (Receptacle, Straight)

Unit : mm(inch)

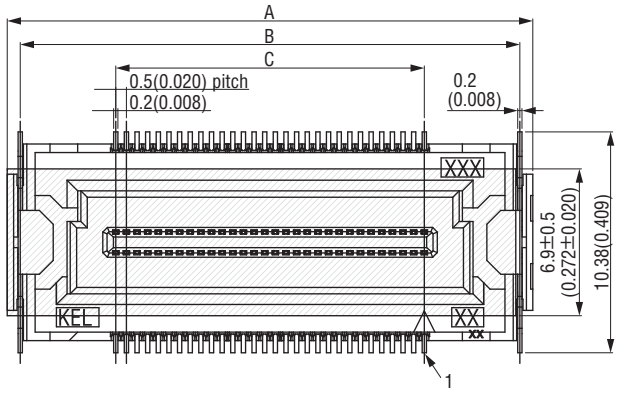

Printed Circuit Board Layout (Component Side View)

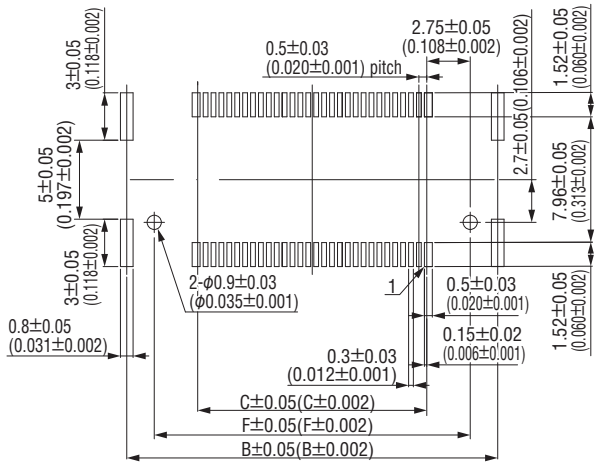

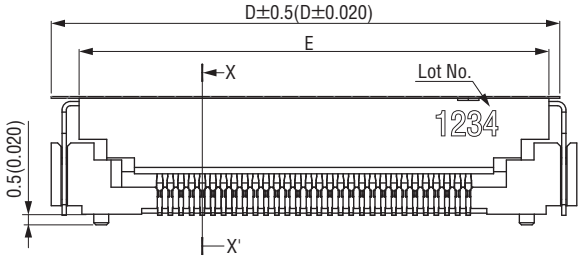

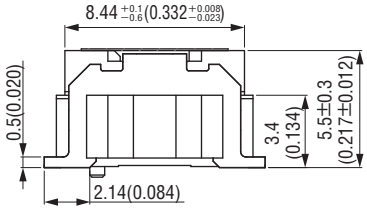

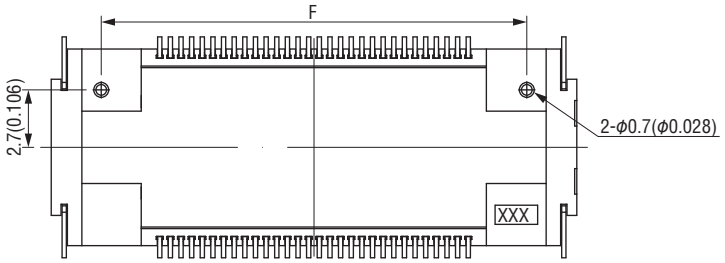

X-X′Cross Section

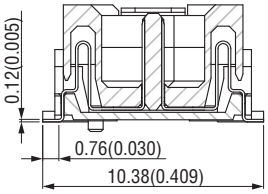

Product Table / Dimensions

Packaging style	
Embossed tape	Tray

No. of contacts	Part Number	A	B	C	D	E	F	Number of packaging	
30	DT0□-030S-T	17.2 (0.677)	15.98 (0.629)	7.0 (0.276)	16.4 (0.646)	14.58 (0.574)	12.5 (0.492)	800	—
40	DT0□-040S-T	19.7 (0.776)	18.48 (0.728)	9.5 (0.374)	18.9 (0.744)	17.08 (0.672)	15.0 (0.591)	800	—
60	DT0□-060S-T	24.7 (0.972)	23.48 (0.924)	14.5 (0.571)	23.9 (0.941)	22.08 (0.869)	20.0 (0.787)	800	—
80	DT0□-080S-T	29.7 (1.169)	28.48 (1.121)	19.5 (0.768)	28.9 (1.138)	27.08 (1.066)	25.0 (0.984)	800	—
100	DT0□-100S-T	34.7 (1.366)	33.48 (1.318)	24.5 (0.965)	33.9 (1.335)	32.08 (1.263)	30.0 (1.181)	800	—
140	DT0□-140S-T	44.7 (1.760)	43.48 (1.712)	34.5 (1.358)	43.9 (1.728)	42.08 (1.657)	40.0 (1.575)	800	—
240	DT0□-240S-TR-T	69.7 (2.744)	68.48 (2.696)	59.5 (2.343)	68.9 (2.713)	67.08 (2.641)	65.0 (2.559)	—	20

* 240 pin connectors are supplied in trays, and the minimum purchase quantity is 200.
Please place your order in multiples of the minimum quantity.

DT0□-□□□L-□□ (Receptacle, Right angle)

Unit : mm(inch)

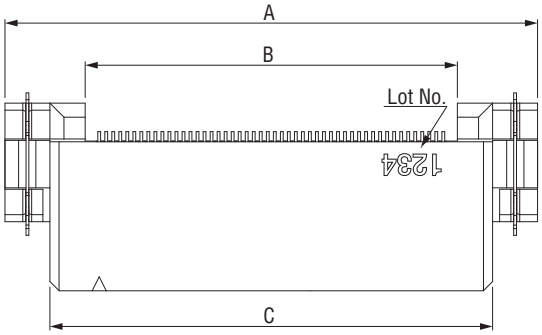

Printed Circuit Board Layout (Component Side View)

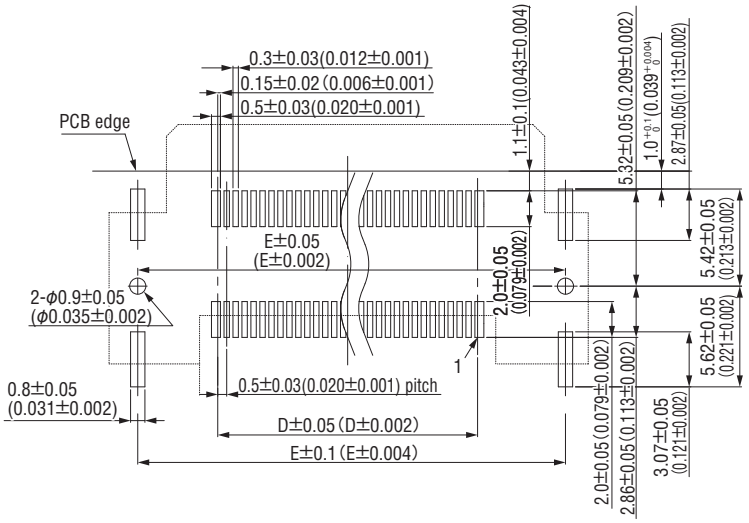

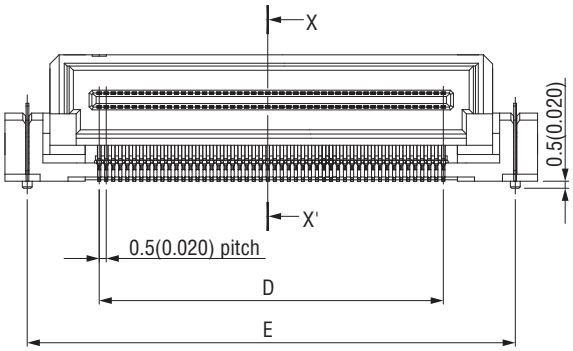

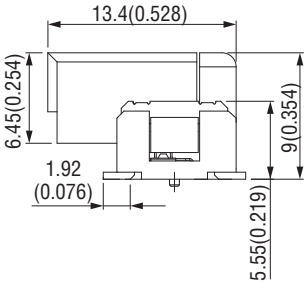

X-X′Cross Section

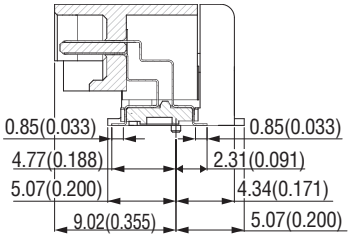

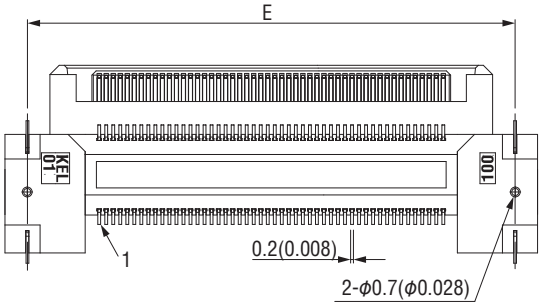

Packaging style	
Embossed tape	Tray

Product Table / Dimensions

No. of contacts	Part Number	A	B	C	D	E	Number of packaging	
30	DT0□-030L	20.42 (0.804)	9.1 (0.358)	14.02 (0.552)	7.0 (0.276)	17.25 (0.679)	300	—
40	DT0□-040L	22.92 (0.902)	11.6 (0.457)	16.52 (0.650)	9.5 (0.374)	19.75 (0.778)	300	—
60	DT0□-060L	27.92 (1.099)	16.6 (0.654)	21.52 (0.847)	14.5 (0.571)	24.75 (0.974)	300	—
80	DT0□-080L	32.92 (1.296)	21.6 (0.850)	26.52 (1.044)	19.5 (0.768)	29.75 (1.171)	300	—
100	DT0□-100L	37.92 (1.493)	26.6 (1.047)	31.52 (1.241)	24.5 (0.965)	34.75 (1.368)	300	—
140	DT0□-140L-TR	47.92 (1.887)	36.6 (1.441)	41.52 (1.635)	34.5 (1.358)	44.75 (1.762)	—	24

* 140 pin connectors are supplied in trays, and the minimum purchase quantity is 192.
Please place your order in multiples of the minimum quantity.

B.C.E. S.r.l. Via Regina Pacis, 54/c - I 41049 Sassuolo (MO) Tel.: (+39) 0536 811616 - Fax.: (+39) 0536 811500 e-mail: bce@bce.it - Website: www.bce.it

DT1□-□□□S-10-□□-T (Plug, Straight For 10mm stacked height)

Unit : mm(inch)

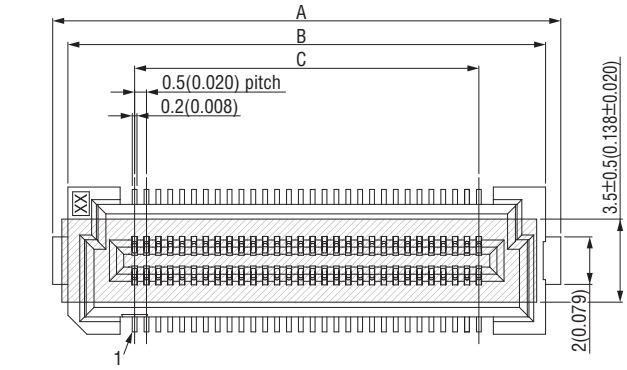

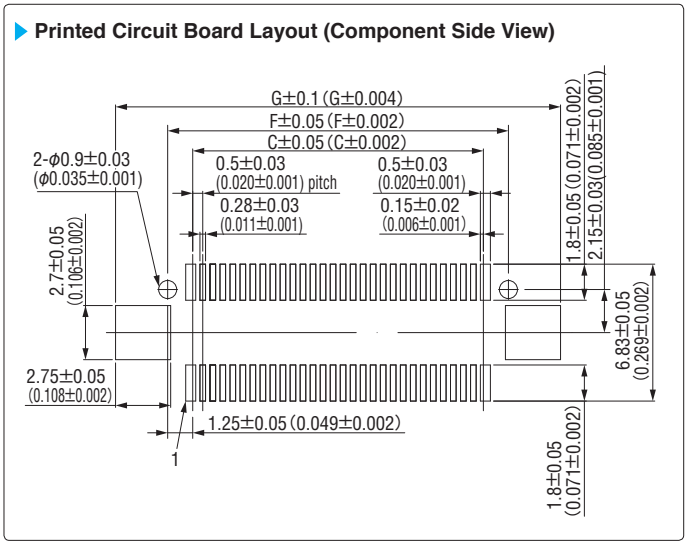

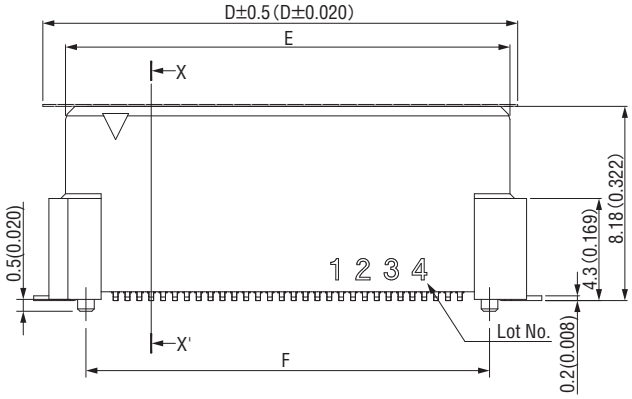

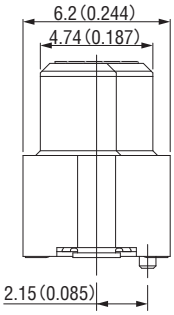

X-X′Cross Section

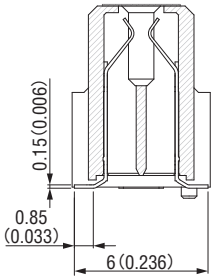

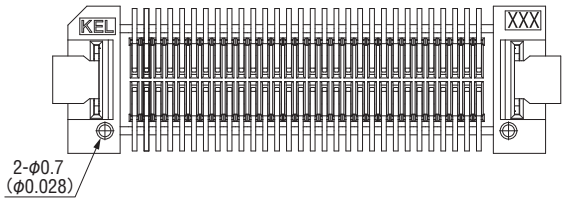

Packaging style	
Embossed tape	Tray

Product Table / Dimensions

No. of contacts	Part Number	A	B	C	D	E	F	G	Number of packaging	
30	DT1□-030S-10-T	13.9 (0.547)	12.62 (0.497)	7.0 (0.276)	12.5 (0.492)	11.22 (0.442)	9.5 (0.374)	14.7 (0.579)	500	—
40	DT1□-040S-10-T	16.4 (0.646)	15.12 (0.595)	9.5 (0.374)	15.0 (0.591)	13.72 (0.540)	12.0 (0.472)	17.2 (0.677)	500	—
60	DT1□-060S-10-T	21.4 (0.843)	20.12 (0.792)	14.5 (0.571)	20.0 (0.787)	18.72 (0.737)	17.0 (0.669)	22.2 (0.874)	500	—
80	DT1□-080S-10-T	26.4 (1.039)	25.12 (0.989)	19.5 (0.768)	25.0 (0.984)	23.72 (0.934)	22.0 (0.866)	27.2 (1.071)	500	—
100	DT1□-100S-10-T	31.4 (1.236)	30.12 (1.186)	24.5 (0.965)	30.0 (1.181)	28.72 (1.131)	27.0 (1.063)	32.2 (1.268)	500	—
140	DT1□-140S-10-T	41.4 (1.630)	40.12 (1.580)	34.5 (1.358)	40.0 (1.575)	38.72 (1.524)	37.0 (1.457)	42.2 (1.661)	500	—
240	DT1□-240S-10-TR-T	66.4 (2.614)	65.12 (2.564)	59.5 (2.343)	65.0 (2.559)	63.72 (2.509)	62.0 (2.441)	67.2 (2.646)	—	20

* 240 pin connectors are supplied in trays, and the minimum purchase quantity is 160.
Please place your order in multiples of the minimum quantity.

B.C.E. S.r.l. Via Regina Pacis, 54/c - I 41049 Sassuolo (MO) Tel.: (+39) 0536 811616 - Fax.: (+39) 0536 811500 e-mail: bce@bce.it - Website: www.bce.it

DT1□-□□□S-□□-T (Plug, Straight, For 17, 18, 19 and 20mm stacked height)

Unit : mm(inch)

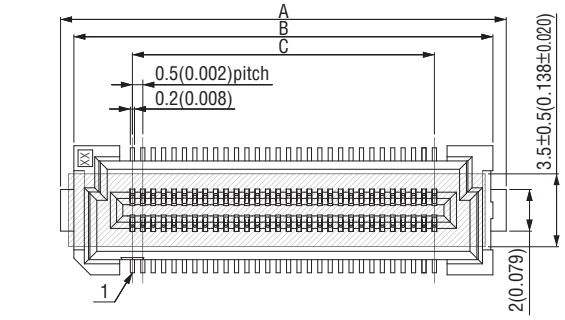

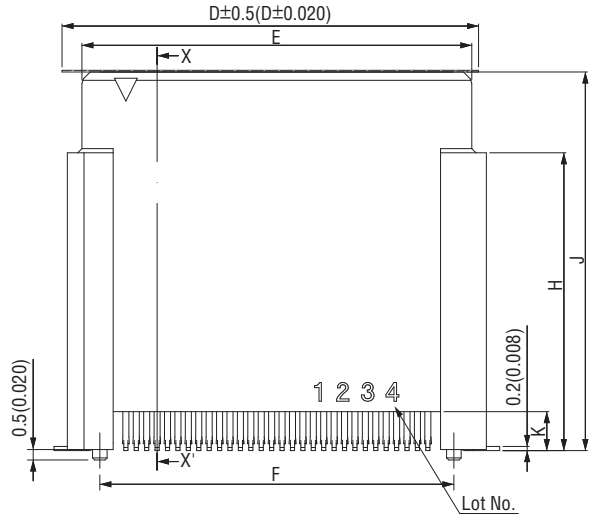

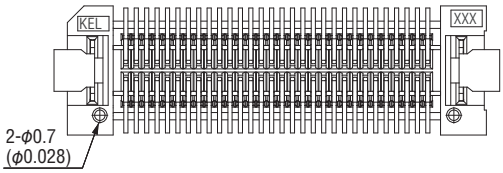

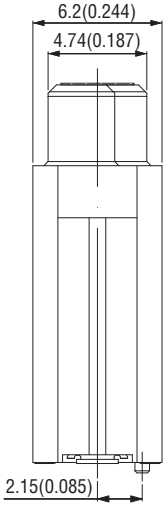

X-X′Cross Section

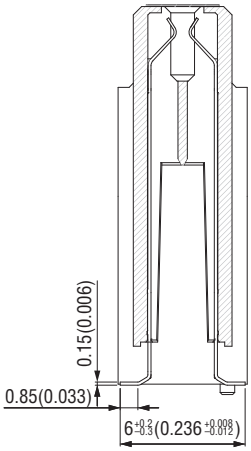

Printed Circuit Board Layout (Component Side View)

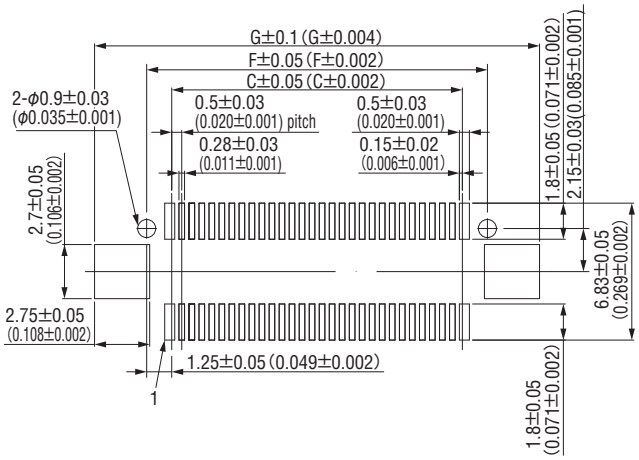

Packaging style
Embossed tape

Part Number	Stacked height	H	J	K	Number of packing
DT1□-□□□S-17-T	17.0 (0.669)	11.3 (0.445)	15.18 (0.598)	0.87 (0.034)	250
DT1□-□□□S-18-T	18.0 (0.709)	12.3 (0.484)	16.18 (0.637)	1.87 (0.074)	250
DT1□-□□□S-19-T	19.0 (0.748)	13.3 (0.524)	17.18 (0.676)	0.87 (0.034)	200
DT1□-□□□S-20-T	20.0 (0.787)	14.3 (0.563)	18.18 (0.716)	1.87 (0.074)	200

Product Table / Dimensions

No. of contacts	Part Number	A	B	C	D	E	F	G
30	DT1□-030S-□□-T	13.9 (0.547)	12.62 (0.497)	7.0 (0.276)	12.5 (0.492)	11.22 (0.442)	9.5 (0.374)	14.7 (0.579)
40	DT1□-040S-□□-T	16.4 (0.646)	15.12 (0.595)	9.5 (0.374)	15.0 (0.591)	13.72 (0.540)	12.0 (0.472)	17.2 (0.677)
60	DT1□-060S-□□-T	21.4 (0.843)	20.12 (0.792)	14.5 (0.571)	20.0 (0.787)	18.72 (0.737)	17.0 (0.669)	22.2 (0.874)
80	DT1□-080S-□□-T	26.4 (1.039)	25.12 (0.989)	19.5 (0.768)	25.0 (0.984)	23.72 (0.934)	22.0 (0.866)	27.2 (1.071)
100	DT1□-100S-□□-T	31.4 (1.236)	30.12 (1.186)	24.5 (0.965)	30.0 (1.181)	28.72 (1.131)	27.0 (1.063)	32.2 (1.268)
140	DT1□-140S-□□-T	41.4 (1.630)	40.12 (1.580)	34.5 (1.358)	40.0 (1.575)	38.72 (1.524)	37.0 (1.457)	42.2 (1.661)

DT1□-□□□L-□□ (Plug, Right angle)

Unit : mm(inch)

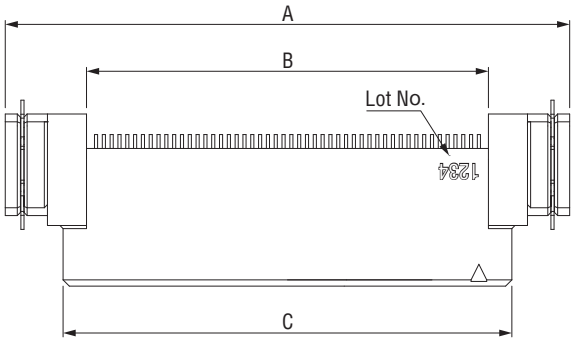

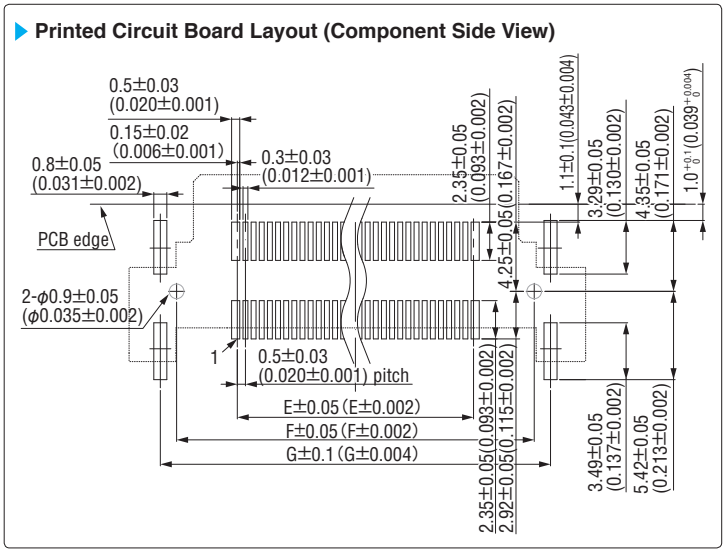

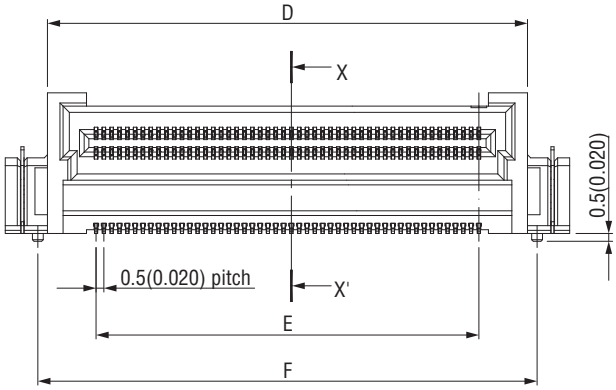

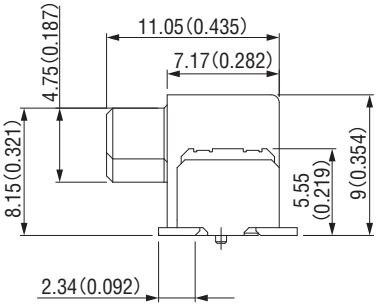

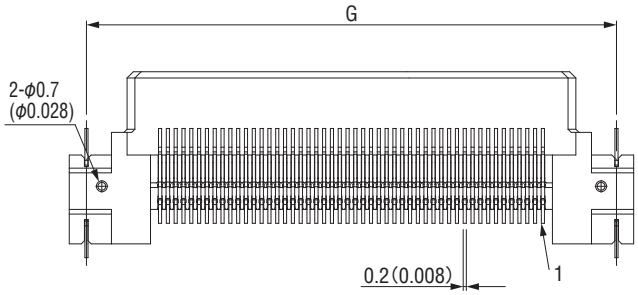

X-X′Cross Section

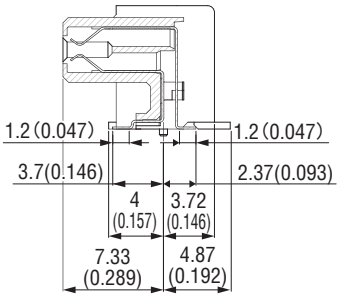

Packaging style	
Embossed tape	Tray

Product Table / Dimensions

No. of contact	Part Number	A	B	C	D	E	F	G	Number of packaging	
30	DT1□-030L	18.62 (0.733)	8.22 (0.324)	11.22 (0.442)	13.22 (0.520)	7.0 (0.276)	14.45 (0.569)	16.45 (0.648)	300	—
40	DT1□-040L	21.12 (0.831)	10.72 (0.422)	13.72 (0.540)	15.72 (0.619)	9.5 (0.374)	16.95 (0.667)	18.95 (0.746)	300	—
60	DT1□-060L	26.12 (1.028)	15.72 (0.619)	18.72 (0.737)	20.72 (0.816)	14.5 (0.571)	21.95 (0.864)	23.95 (0.943)	300	—
80	DT1□-080L	31.12 (1.225)	20.72 (0.816)	23.72 (0.934)	25.72 (1.013)	19.5 (0.768)	26.95 (1.061)	28.95 (1.140)	300	—
100	DT1□-100L	36.12 (1.422)	25.72 (1.013)	28.72 (1.131)	30.72 (1.209)	24.5 (0.965)	31.95 (1.258)	33.95 (1.337)	300	—
140	DT1□-140L-TR	46.12 (1.816)	35.72 (1.406)	38.72 (1.524)	40.72 (1.603)	34.5 (1.358)	41.95 (1.652)	43.95 (1.730)	—	24

* 140 pin connectors are supplied in trays, and the minimum purchase quantity is 192.
Please place your order in multiples of the minimum quantity.

B.C.E. S.r.l. Via Regina Pacis, 54/c - I 41049 Sassuolo (MO) Tel.: (+39) 0536 811616 - Fax.: (+39) 0536 811500 e-mail: bce@bce.it - Website: www.bce.it

DY SERIES

0.5mm PITCH FLOATING CONNECTOR

RoHS Compliant

FEATURES

- Location error offsets ±0.5mm in the XY direction.
- High reliable design with effective mating length of 1.25mm(0.049").
- Suction area for automated mounting provided.
- Positioning posts are optional for manual mounting.
- Wide variations of contacts (30, 40, 50, 60, 80, 100, 120 and 140 pins) are available.
  *Available pin count varies with the product type.
- Vertical and Stacked mating combinations.
- Stacked mating heights of 5, 6, 7, 8, 9, 10, 11, 12, 13 and 14mm. (0.197, 0236, 0.276, 0.315, 0.354, 0.394, 0.433, 0.472, 0.512 and 0.551")
  *Available mating height varies with the product type.
- Shape of retention clip forming the large fillet.
  *Optional type with a dust cap provided on a plug side is also available.

ORDER CODE

DY0□-□□□S-□-□□

① ② ③ ④ ⑤

*Please order in multiples of the quantity per package.

① 【Type】 Receptacle **DY00 :** Without positioning posts **DY01 :** With positioning posts

② 【Number of contacts】 **030 :** 30 pin **040 :** 40 pin **050 :** 50 pin **060 :** 60 pin **080 :** 80 pin **100 :** 100 pin **120 :** 120 pin **140 :** 140 pin

③ 【Contact tail style】 **S :** Straight

④ 【Number of packaging】 **Omit :** 1000pcs, per reel **A :** 500pcs, per reel

⑤ 【Anti-dust tape】 **Omit :** without anti-dust tape **BT :** with anti-dust tape (excl. DY00, DY01-50 pins, and DY01-A)

ORDER CODE

DY1□-□□□ □□-□-□

① ② ③ ④ ⑤

*Please order in multiples of the quantity per package.

① 【Type】 Plug **DY10 :** Without positioning posts **DY11 :** With positioning posts

② 【Number of contacts】 (S type) **030 :** 30pin **040 :** 40pin **050 :** 50pin **060 :** 60pin **080 :** 80pin **100 :** 100pin **120 :** 120 pin **140 :** 140 pin
*The product of 30pin, 40pin and 50pin corresponds to the type of 5mm, 6mm and 7mm in the stack height.
(FS type) **060 :** 60 pin **080 :** 80 pin **100 :** 100 pin **120 :** 120 pin **140 :** 140 pin
(L type) **030 :** 30 pin **040 :** 40 pin **050 :** 50 pin **060 :** 60 pin **080 :** 80 pin **100 :** 100 pin **120 :** 120 pin **140 :** 140 pin

③ 【Contact tail style】 **S :** Straight (Stacked height: 5 to 10mm) **FS :** Flexible straight (Stacked height: 11 to 14mm) **L :** Right angle

④ 【Stacked height】 (S type) **1** : 5mm(0.197") **2** : 6mm(0236") **3** : 7mm(0.276") **4** : 8mm(0.315") **5** : 9mm(0.354") **6** : 10mm(0.394")
(FS type) **1** : 11mm(0.433") **2** : 12mm(0.472") **3** : 13mm(0.512") **4** : 14mm(0.551")

⑤ 【Number of packaging】 (S type) **Omit :** 500pcs, per reel (Stacked height 6 to 10mm) 1,000pcs, per reel (Stacked height 5mm)
A : 500pcs, per reel (Stacked height 5mm)

SPECIFICATIONS

Material and plating	
Insulator material	Glass-filled LCP (UL94V-0), Black
Contact material	Copper alloy
Contact plating	Gold over Nickel
Retention clip material	Copper alloy
Retention clip plating	Gold over Nickel

Electrical Characteristics	
Current rating	0.4A per contact 0.3A per contact (DY1□-□□□L)
Contact resistance	80mΩ max. 100mΩ max. (DY1□-□□□L)
Dielectric withstanding voltage	200V AC for 1 minute
Insulation resistance	100MΩ min. at 250V DC
Operating temperature	-40°C to +85°C

*Regarding the rated current of the DY series, it is possible to design a current capacity exceeding the standard 0.4 A / pin. i.e. 0.5 A / pin.
Please contact your local KEL sales office.

B.C.E. S.r.l. Via Regina Pacis, 54/c - I 41049 Sassuolo (MO) Tel.: (+39) 0536 811616 - Fax.: (+39) 0536 811500 e-mail: bce@bce.it - Website: www.bce.it

Floating Connector

When the connector is mounted on the printed circuit board, a location error in the two directions of horizontal and vertical(XY direction) may occur at both connectors. In addition, if each printed circuit board is fixed to a case by screws after mating connectors, the connectors may have to compensate for the location error because a gap occurs during screwing to the printed circuit board. A connector having a tolerance to compensate for such an error or gap caused by vibration is called a floating connector. The DY series is a 0.5mm(0.020'') fine pitch connector with ±0.5mm(0.020'') floating mechanism and ensures sufficient compensation for location errors.

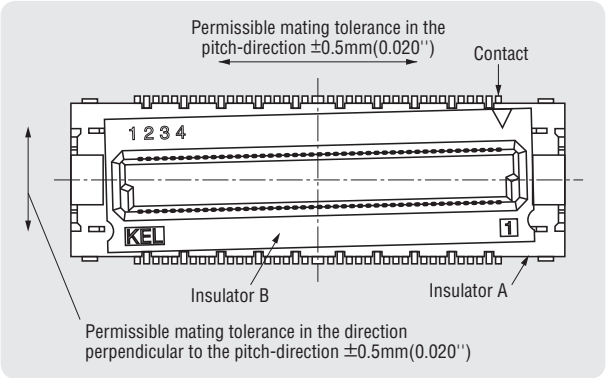

Mating Drawing

Unit : mm(inch)

◆Stacked Mating

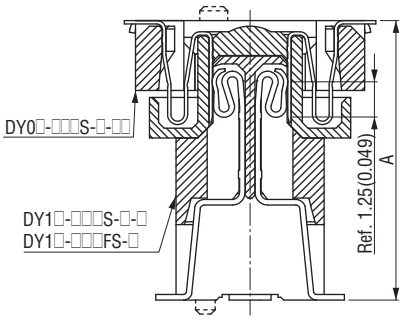

Part Number	A
DY1□-□□□S-1-□	5(0.197)
DY1□-□□□S-2	6(0.236)
DY1□-□□□S-3	7(0.276)
DY1□-□□□S-4	8(0.315)
DY1□-□□□S-5	9(0.354)
DY1□-□□□S-6	10(0.394)
DY1□-□□□FS-1	11(0.433)
DY1□-□□□FS-2	12(0.472)
DY1□-□□□FS-3	13(0.512)
DY1□-□□□FS-4	14(0.551)

◆Vertical Mating

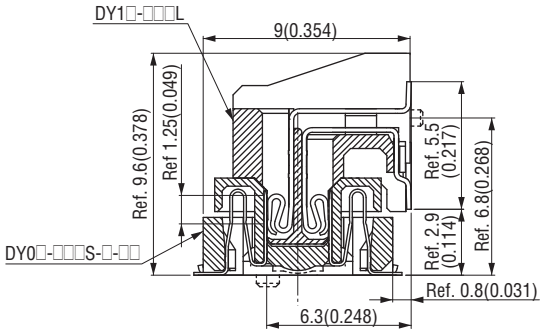

DY0□-□□□S-□-□□ (Receptacle, Straight)

Unit : mm(inch)

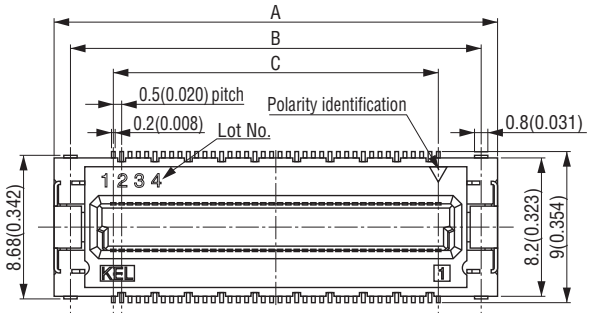

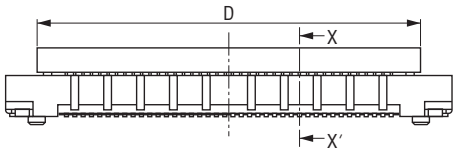

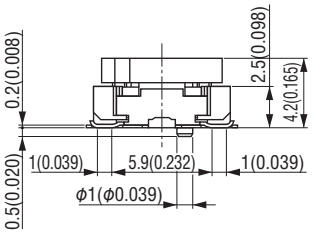

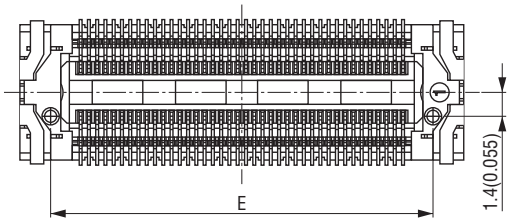

Printed Circuit Board Layout (Component Side View)

For 30, 40, 50 pins

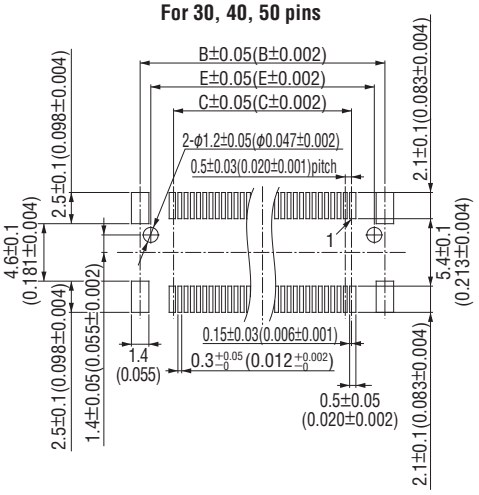

For 60, 80, 100, 120, 140 pins

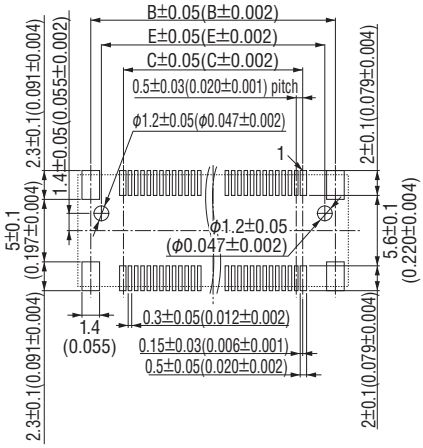

X-X′Cross Section

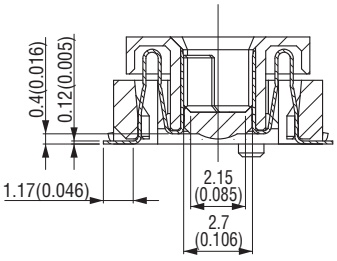

Packaging style
Embossed tape

Product Table

Part Number	Number of packaging
DY0□-□□□S-□□	1,000
DY0□-□□□S-A	500

Product Table / Dimensions

No. of contacts	Part Number	A	B	C	D	E
30	DY0□-030S-□-□□	14.2 (0.559)	12.2 (0.480)	7.0 (0.276)	10.5 (0.413)	10.5 (0.413)
40	DY0□-040S-□-□□	16.7 (0.657)	14.7 (0.579)	9.5 (0.374)	13.0 (0.512)	13.0 (0.512)
50	DY0□-050S-□	19.2 (0.756)	17.2 (0.677)	12.0 (0.472)	15.5 (0.610)	15.5 (0.610)
60	DY0□-060S-□-□□	21.7 (0.854)	19.7 (0.776)	14.5 (0.571)	18.0 (0.709)	18.0 (0.709)
80	DY0□-080S-□-□□	26.7 (1.051)	24.7 (0.972)	19.5 (0.768)	23.0 (0.906)	23.0 (0.906)
100	DY0□-100S-□-□□	31.7 (1.248)	29.7 (1.169)	24.5 (0.965)	28.0 (1.102)	28.0 (1.102)
120	DY0□-120S-□-□□	36.7 (1.445)	34.7 (1.366)	29.5 (1.161)	33.0 (1.299)	33.0 (1.299)
140	DY0□-140S-□-□□	41.7 (1.642)	39.7 (1.563)	34.5 (1.358)	38.0 (1.496)	38.0 (1.496)

DY1□-□□□S-□-□ (Plug, Straight, For 5, 6 and 7mm stacked height)

Unit : mm(inch)

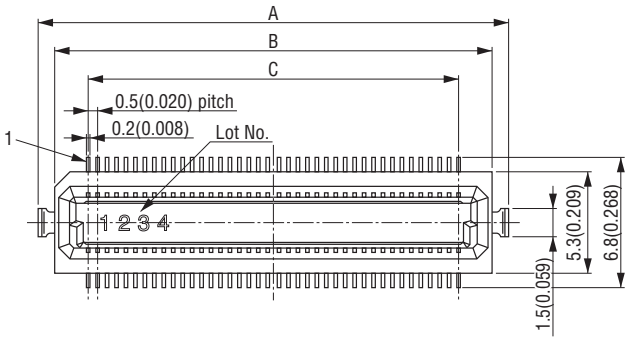

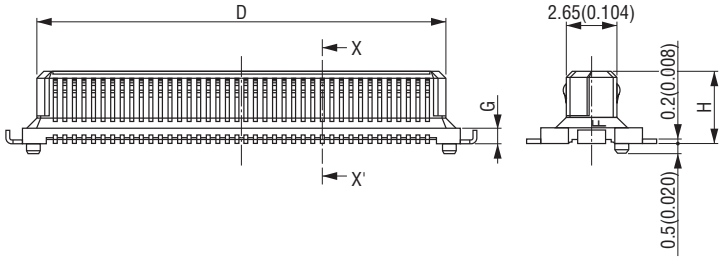

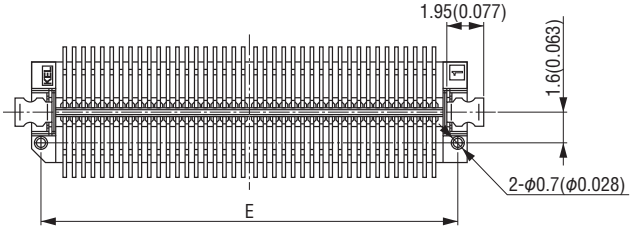

Printed Circuit Board Layout (Component Side View)

For 30, 40, 50 pins

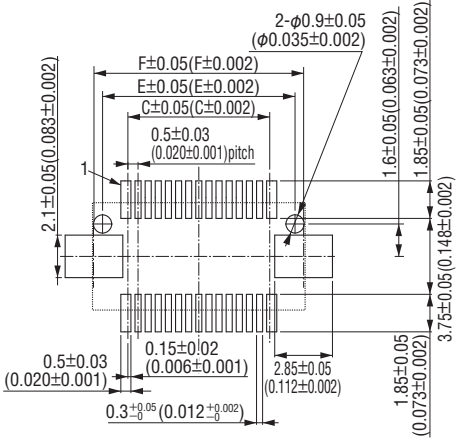

For 60, 80, 100, 120, 140 pins

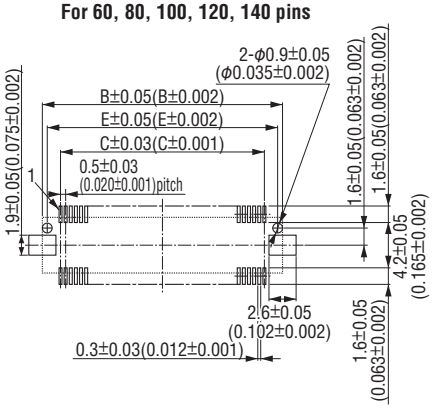

X-X′Cross Section

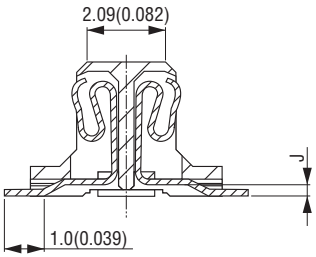

Packaging style
Embossed tape

Part Number	Stacked height	G	H	J	Number of packaging
DY1□-□□□S-1	5.0 (0.197)	0.8 (0.031)	3.73 (0.147)	0.27 (0.011)	1,000
DY1□-□□□S-1-A	5.0 (0.197)	0.8 (0.031)	3.73 (0.147)	0.27 (0.011)	500
DY1□-□□□S-2	6.0 (0.236)	1.8 (0.071)	4.73 (0.186)	1.27 (0.050)	500
DY1□-□□□S-3	7.0 (0.276)	2.8 (0.110)	5.73 (0.226)	2.27 (0.089)	500

Product Table / Dimensions

No. of contacts	Part Number	A	B	C	D	E	F
30	DY1□-030S-□-□	12.2 (0.480)	10.5 (0.413)	7.0 (0.276)	8.9 (0.350)	9.5 (0.374)	10.35 (0.407)
40	DY1□-040S-□-□	14.7 (0.579)	13.0 (0.512)	9.5 (0.374)	11.4 (0.449)	12.0 (0.472)	12.85 (0.506)
50	DY1□-050S-□-□	17.2 (0.677)	15.5 (0.610)	12.0 (0.472)	13.9 (0.547)	14.5 (0.571)	15.35 (0.604)
60	DY1□-060S-□-□	19.7 (0.776)	18.0 (0.709)	14.5 (0.571)	16.4 (0.646)	17.0 (0.669)	–
80	DY1□-080S-□-□	24.7 (0.972)	23.0 (0.906)	19.5 (0.768)	21.4 (0.843)	22.0 (0.866)	–
100	DY1□-100S-□-□	29.7 (1.169)	28.0 (1.102)	24.5 (0.965)	26.4 (1.039)	27.0 (1.063)	–
120	DY1□-120S-□-□	34.7 (1.366)	33.0 (1.299)	29.5 (1.161)	31.4 (1.236)	32.0 (1.260)	–
140	DY1□-140S-□-□	39.7 (1.563)	38.0 (1.496)	34.5 (1.358)	36.4 (1.433)	37.0 (1.457)	–

DY1□-□□□S-□ (Plug, Straight, For 8, 9 and 10mm stacked height)

Unit : mm(inch)

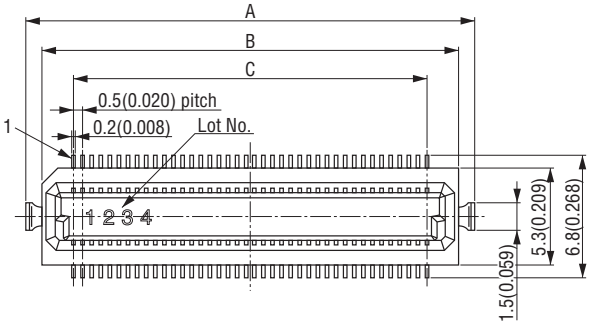

Printed Circuit Board Layout (Component Side View)

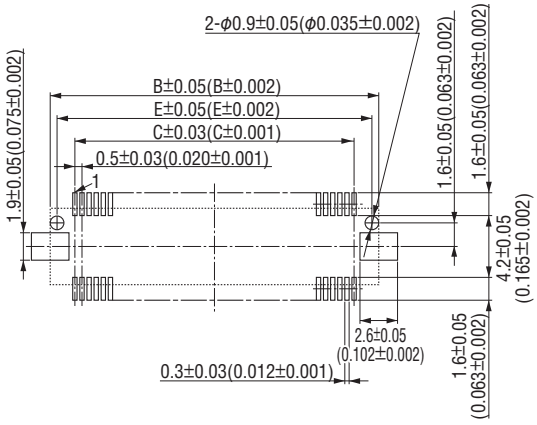

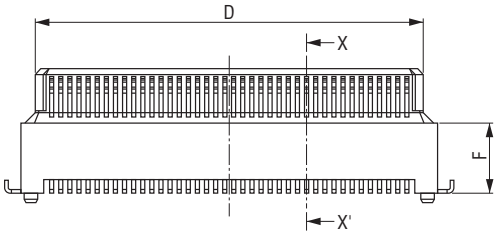

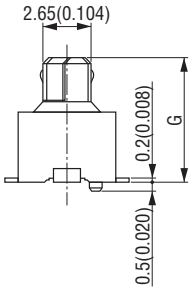

X-X′Cross Section

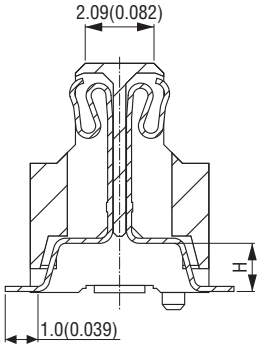

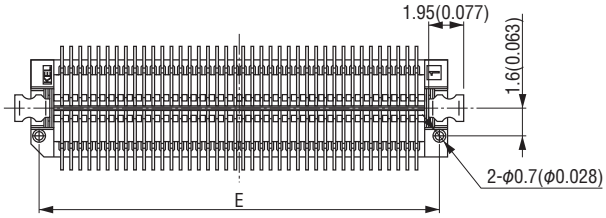

Packaging style
Embossed tape

Part Number	Stacked height	F	G	H	Number of packaging
DY1□-□□□S-4	8.0 (0.315)	3.8 (0.150)	6.73 (0.265)	1.4 (0.055)	500
DY1□-□□□S-5	9.0 (0.354)	4.8 (0.189)	7.73 (0.304)	2.4 (0.094)	500
DY1□-□□□S-6	10.0 (0.394)	5.8 (0.228)	8.73 (0.344)	3.4 (0.134)	500

Product Table / Dimensions

No. of contacts	Part Number	A	B	C	D	E
60	DY1□-060S-□	19.7 (0.776)	18.0 (0.709)	14.5 (0.571)	16.4 (0.646)	17.0 (0.669)
80	DY1□-080S-□	24.7 (0.972)	23.0 (0.906)	19.5 (0.768)	21.4 (0.843)	22.0 (0.866)
100	DY1□-100S-□	29.7 (1.169)	28.0 (1.102)	24.5 (0.965)	26.4 (1.039)	27.0 (1.063)
120	DY1□-120S-□	34.7 (1.366)	33.0 (1.299)	29.5 (1.161)	31.4 (1.236)	32.0 (1.260)
140	DY1□-140S-□	39.7 (1.563)	38.0 (1.496)	34.5 (1.358)	36.4 (1.433)	37.0 (1.457)

B.C.E. S.r.l. Via Regina Pacis, 54/c - I 41049 Sassuolo (MO) Tel.: (+39) 0536 811616 - Fax.: (+39) 0536 811500 e-mail: bce@bce.it - Website: www.bce.it

DY1□-□□□FS-□ (Plug, Flexible straight, For 11, 12, 13 and 14mm stacked height)

Unit : mm(inch)

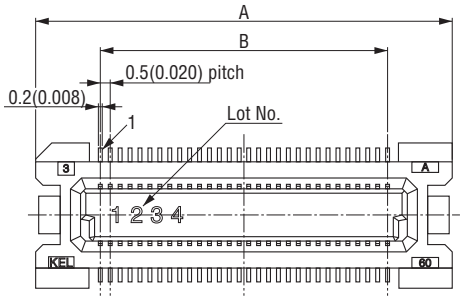

Printed Circuit Board Layout (Component Side View)

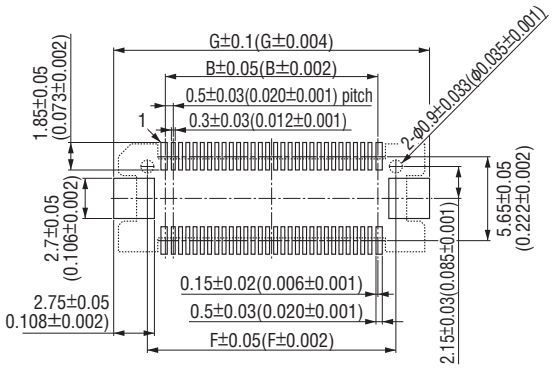

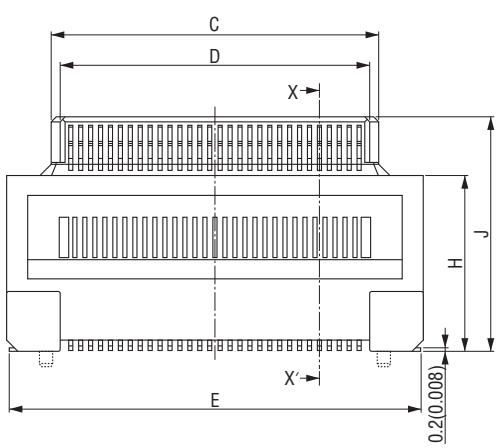

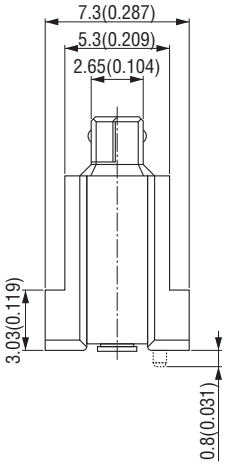

X-X′Cross Section

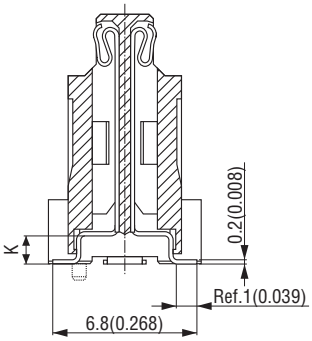

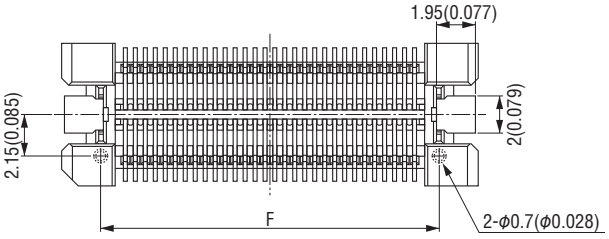

Part Number	Stacked height	H	J	K
DY1□-□□□FS-1	11.0 (0.433)	6.8 (0.268)	9.73 (0.383)	0.3 (0.012)
DY1□-□□□FS-2	12.0 (0.472)	7.8 (0.307)	10.73 (0.422)	1.3 (0.051)
DY1□-□□□FS-3	13.0 (0.512)	8.8 (0.346)	11.73 (0.462)	1.3 (0.051)
DY1□-□□□FS-4	14.0 (0.551)	9.8 (0.386)	12.73 (0.501)	1.3 (0.051)

Packaging style
Tray

Product Table / Dimensions

No. of contacts	Part Number	A	B	C	D	E	F	G	Number of packaging
60	DY1□-060FS-□	20.9 (0.823)	14.5 (0.571)	16.4 (0.646)	15.5 (0.610)	20.7 (0.815)	17 (0.669)	21.5 (0.846)	60
80	DY1□-080FS-□	25.9 (1.020)	19.5 (0.768)	21.4 (0.843)	20.5 (0.807)	25.7 (1.012)	22 (0.866)	26.5 (1.043)	50
100	DY1□-100FS-□	30.9 (1.217)	24.5 (0.965)	26.4 (1.039)	25.5 (1.004)	30.7 1.209)	27 (1.063)	31.5 (1.240)	50
120	DY1□-120FS-□	35.9 (1.413)	29.5 (1.161)	31.4 (1.236)	30.5 (1.201)	35.7 (1.406)	32 (1.260)	36.5 (1.437)	40
140	DY1□-140FS-□	40.9 (1.610)	34.5 (1.358)	36.4 (1.433)	35.5 (1.398)	40.7 (1.602)	37 (1.457)	41.5 (1.634)	40

The connectors are supplied in trays. Please order a minimum of 500 pieces and in multiples of the quantity per package.

DY1□-□□□L (Plug, Right angle)

Unit : mm(inch)

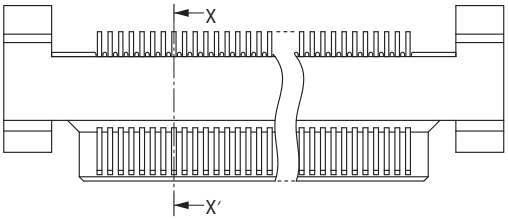

Printed Circuit Board Layout (Component Side View)

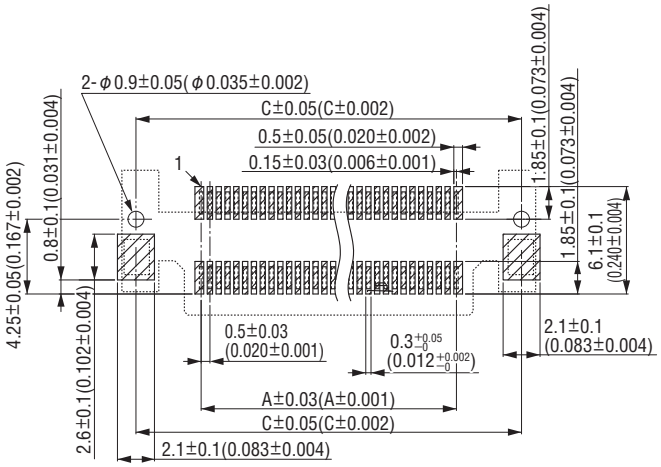

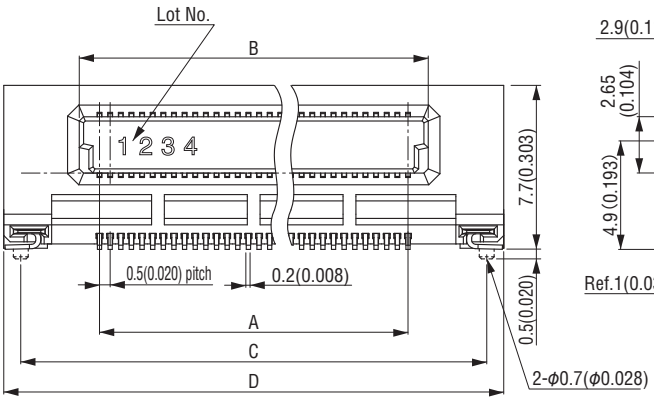

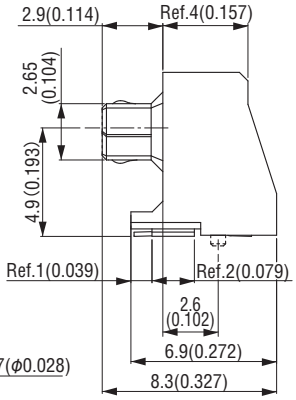

X-X′Cross Section

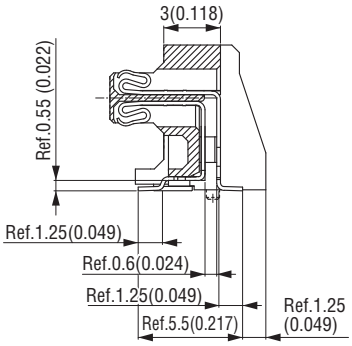

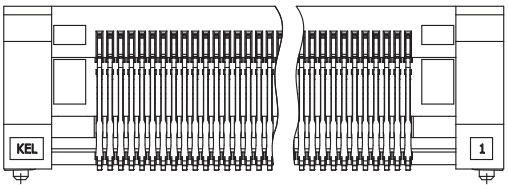

Packaging style
Embossed tape

Product Table / Dimensions

No. of contacts	Part Number	A	B	C	D	Number of packaging
30	DY1□-030L	7.0 (0.276)	8.9 (0.350)	14.4 (0.567)	16.0 (0.630)	500
40	DY1□-040L	9.5 (0.374)	11.4 (0.449)	16.9 (0.665)	18.5 (0.728)	500
50	DY1□-050L	12.0 (0.472)	13.9 (0.547)	19.4 (0.764)	21.0 (0.827)	500
60	DY1□-060L	14.5 (0.571)	16.4 (0.646)	21.9 (0.862)	23.5 (0.925)	500
80	DY1□-080L	19.5 (0.768)	21.4 (0.843)	26.9 (1.059)	28.5 (1.122)	500
100	DY1□-100L	24.5 (0.965)	26.4 (1.039)	31.9 (1.256)	33.5 (1.319)	500
120	DY1□-120L	29.5 (1.161)	31.4 (1.236)	36.9 (1.453)	38.5 (1.516)	500
140	DY1□-140L	34.5 (1.358)	36.4 (1.433)	41.9 (1.650)	43.5 (1.713)	500

B.C.E. S.r.l. Via Regina Pacis, 54/c - I 41049 Sassuolo (MO) Tel.: (+39) 0536 811616 - Fax.: (+39) 0536 811500 e-mail: bce@bce.it - Website: www.bce.it

8600 SERIES

0.635mm PITCH CONNECTOR

RoHS Compliant

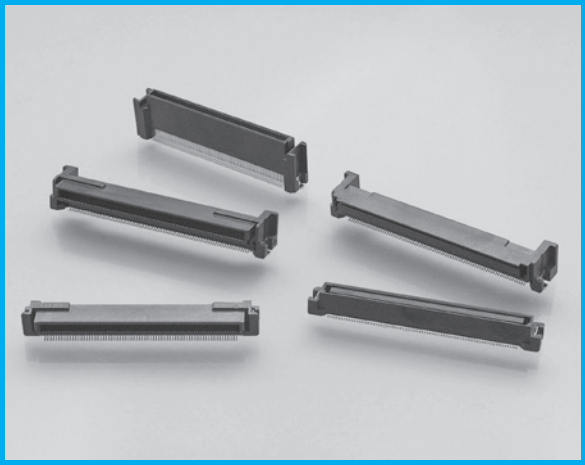

FEATURES

- Compact board-to-board connector, meeting the needs for multi pin count applications.
- High reliable design with effective mating length of 2mm(0.079").
- Horizontal, Vertical and Stacked mating combinations.
- Designed to prevent mis-insertion.
- The plug connector has a box-shaped construction, with highly reliable contact performance.
- Insulator protects the contacts from damage or breakage.
- Robust construction durable for use with industrial equipment.
- Can be automatically or manually placed.
- SMT solder joint.
- Coplanarity 0.1mm.

ORDER CODE

8601-□□□ □□ □-□-□

① ② ③ ④ ⑤ ⑥

*Please order in multiples of the quantity per package.

① **【Type】8601 :** Receptacle

② **【Number of contacts】** (L type) **052 :** 52 pin **120 :** 120 pin **140 :** 140 pin **160 :** 160 pin
(FS type) **060 :** 60 pin **120 :** 120 pin **140 :** 140 pin **160 :** 160 pin(Only 8601-160FSJ-E-P)
(FL type) **060 :** 60 pin **120 :** 120 pin **140 :** 140 pin **160 :** 160 pin **200 :** 200 pin

③ **【Contact tail style】** **L :** Right angle **FS :** Flexible Straight **FL :** Right angle

④ **【Plating type】** (FS type) **Omit :** Entire Gold plating **J :** Partial Gold plating (Only 160 pin)

⑤ **【Stacked height】** (FS type) **A :** 8mm (0.315") **E :** 12mm(0.472") (Only 160 pin) **I :** 16mm(0.630)

⑥ **【Pick&Place cap】** (FS type) **P :** With Pick&Place cap

*If you would like an FS type product without a Pick & Place cap, please feel free to consult with your local KEL sales office.

ORDER CODE

8611□-□□□ □□-□

① ② ③ ④

*Please order in multiples of the quantity per package.

① **【Type】** **8611 :** Plug **8611H :** Plug

② **【Number of contacts】** (S type) **052 :** 52 pin **060 :** 60 pin **120 :** 120 pin **140 :** 140 pin **160 :** 160 pin
(FL type) **060 :** 60 pin **120 :** 120 pin **140 :** 140 pin **160 :** 160 pin **200 :** 200 pin

③ **【Contact tail style】** (8611)**S :** Straight (8611H)**FL :** Right angle

④ **【Pick&Place Cap】** (S type) **P :** With Pick&Place cap **Omit :** Without Pick&Place cap

SPECIFICATIONS

Material and plating		Electrical Characteristics	
Insulator material	Glass-filled LCP (UL94V-0), Black	Current rating	0.5A per contact
Contact material	Copper alloy	Contact resistance	50mΩ max.
Contact plating	Gold over Nickel	Dielectric withstanding voltage	200V AC for 1 minute
Retention clip material	Copper alloy	Insulation resistance	100MΩ min. at 250V DC
Retention clip plating	Gold over Nickel	Operating temperature	-40°C to +85°C

Mating Drawing

Unit : mm(inch)

◆Vertical Mating

8601-□□□L

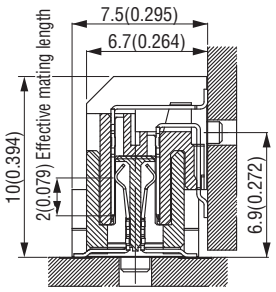

8611-□□□S-□

◆Horizontal Mating

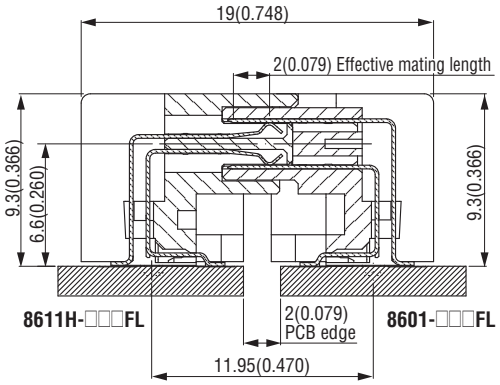

◆Stacked Mating

8601-□□□FS□-□-P

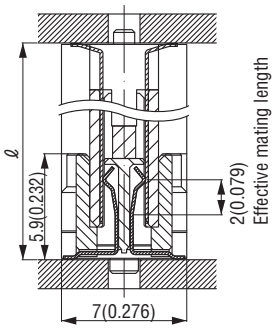

8611-□□□S-□

▶ Stacked Height

Type	ℓ
8601-□□□FS-A-P	8(0.315)
8601-160FSJ-E-P	12(0.472)
8601-□□□FS-I-P	16(0.630)

Mating Matrix

Order Code		Receptacle				
		8601-□□□L	8601-□□□FS-A-P	8601-160FSJ-E-P	8601-□□□FS-I-P	8601-□□□FL
Plug	8611-□□□S-□	*1 Vertical Mating	*2 Stacked Height : 8mm(0.315)	*4 Stacked Height : 12mm(0.472)	*2 Stacked Height : 16mm(0.630)	*6 Vertical Mating
Plug	8611H-□□□FL	*3 Horizontal Offset Mating (See Note 1)	*2 Vertical Mating	*4 Vertical Mating	*2 Vertical Mating	*5 Horizontal Mating

[No. of contacts]
*1 : 52, 120, 140 and 160 pins are available. *2 : 60, 120 and 140 pins are available. *3 : 120, 140 and 160 pins are available.
*4 : 160 pins are available. *5: 60, 120, 140, 160 and 200 pins are available. *6 60, 120, 140 and 160 pins are available.
(Note1) : Please contact your local KEL sales office prior to making PCB due to that a special notice is needed.

8601-□□□L (Receptacle, Right angle)

Unit : mm(inch)

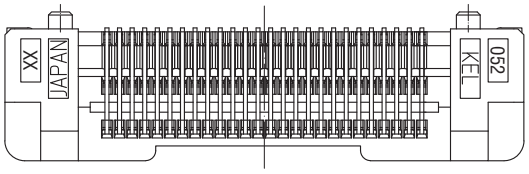

Printed Circuit Board Layout (Component Side View)

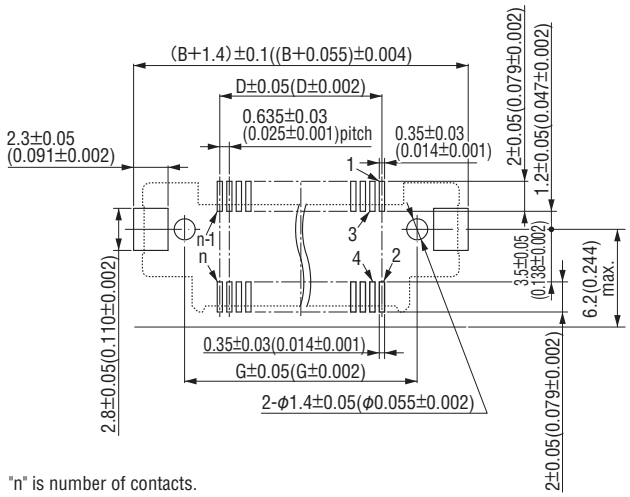

"n" is number of contacts.

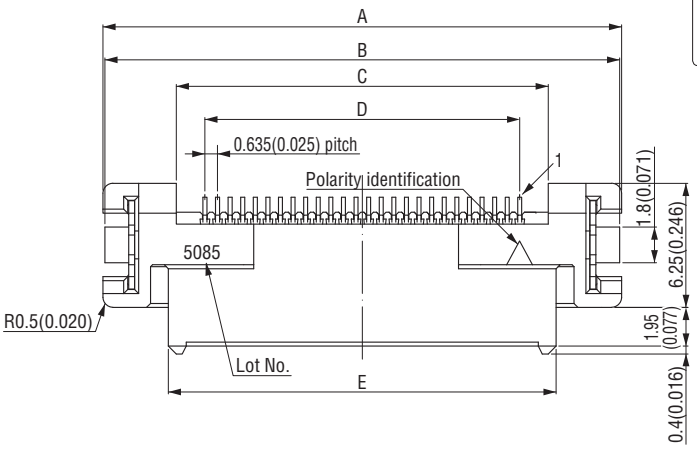

X-X′Cross Section

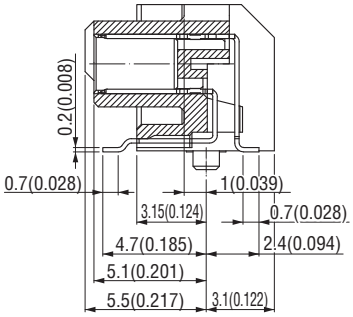

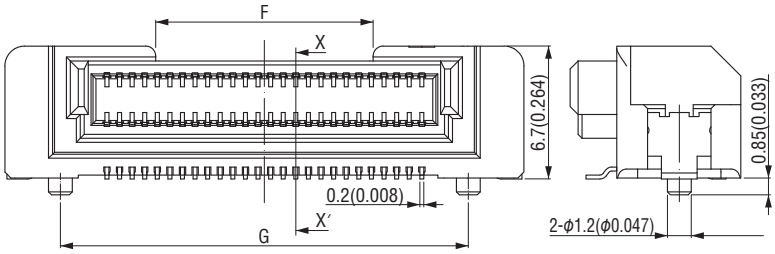

Packaging style
Tray

Product Table / Dimensions

No. of contacts	Part Number	A	B	C	D	E	F	G	Number of packaging
52	8601-052L	26.16 (1.030)	25.96 (1.022)	18.76 (0.739)	15.875 (0.625)	19.56 (0.770)	10.96 (0.431)	20.56 (0.809)	60
120	8601-120L	47.75 (1.880)	47.55 (1.872)	40.35 (1.589)	37.465 (1.475)	41.15 (1.620)	26.15 (1.030)	42.15 (1.659)	30
140	8601-140L	54.10 (2.130)	53.90 (2.122)	46.70 (1.839)	43.815 (1.725)	47.50 (1.870)	32.50 (1.280)	48.50 (1.909)	30
160	8601-160L	60.45 (2.380)	60.25 (2.372)	53.05 (2.089)	50.165 (1.975)	53.85 (2.120)	38.85 (1.530)	54.85 (2.159)	30

B.C.E. S.r.l. Via Regina Pacis, 54/c - I 41049 Sassuolo (MO) Tel.: (+39) 0536 811616 - Fax.: (+39) 0536 811500 e-mail: bce@bce.it - Website: www.bce.it

8601-□□□FS□-□-P (Receptacle, Flexible straight)

Unit : mm(inch)

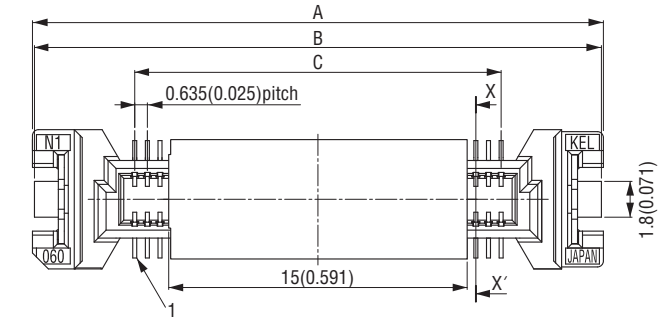

Printed Circuit Board Layout (Component Side View)

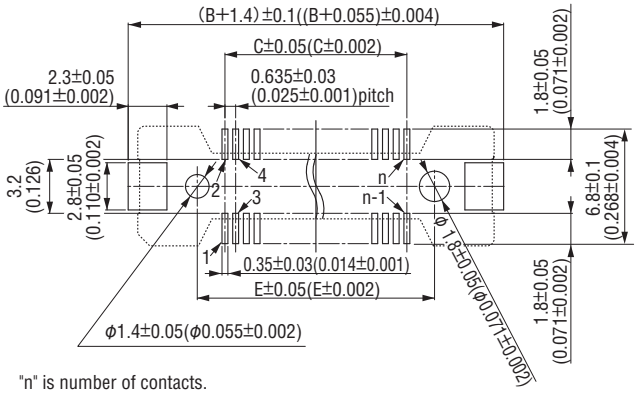

"n" is number of contacts.

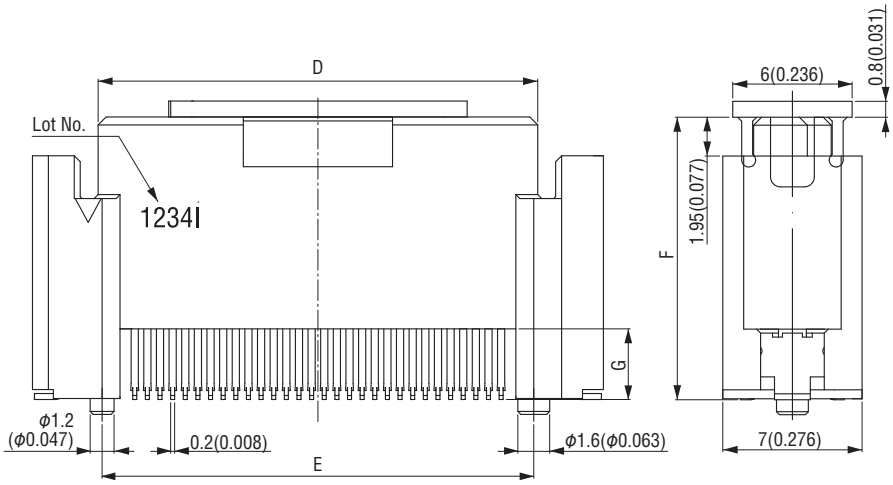

X-X′Cross Section

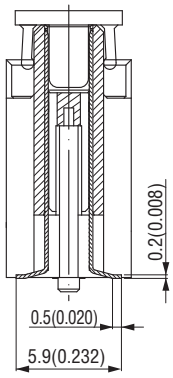

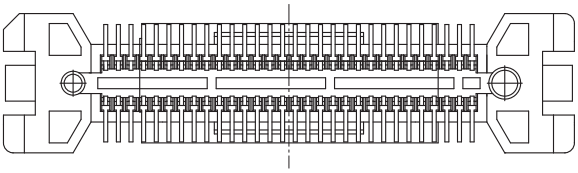

Part Number	Stacked height	F	G
8601-□□□FS-A-P	8	6.20 (0.244)	0.55 (0.022)
8601-160FSJ-E-P	12	10.20 (0.402)	0.70 (0.28)
8601-□□□FS-I-P	16	14.20 (0.559)	3.55 (0.140)

Packaging style
Tray

Product Table / Dimensions

No. of contacts	Part Number	A	B	C	D	E	Number of packaging
60	8601-060FS-□-P	28.70 (1.130)	28.50 (1.122)	18.415 (0.725)	22.10 (0.870)	21.70 (0.854)	50
120	8601-120FS-□-P	47.75 (1.880)	47.55 (1.872)	37.465 (1.475)	41.15 (1.620)	40.75 (1.604)	30
140	8601-140FS-□-P	54.10 (2.130)	53.90 (2.122)	43.815 (1.725)	47.50 (1.870)	47.10 (1.854)	30
160	8601-160FSJ-E-P	60.45 (2.380)	60.25 (2.372)	50.165 (1.975)	53.85 (2.120)	53.45 (2.104)	30

8601-□□□FL (Receptacle, Right angle)

Unit : mm(inch)

Printed Circuit Board Layout (Component Side View)

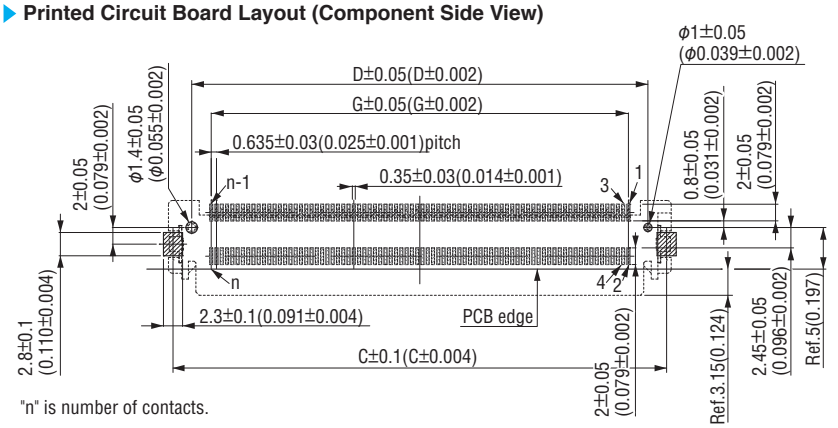

"n" is number of contacts.

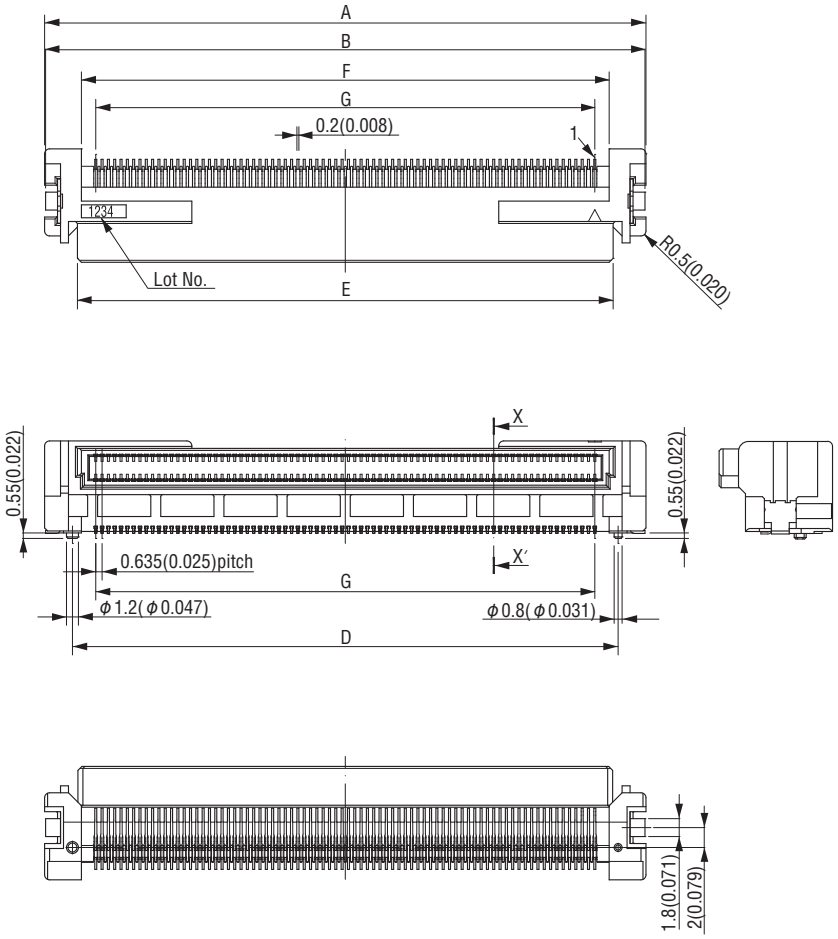

X-X′Cross Section

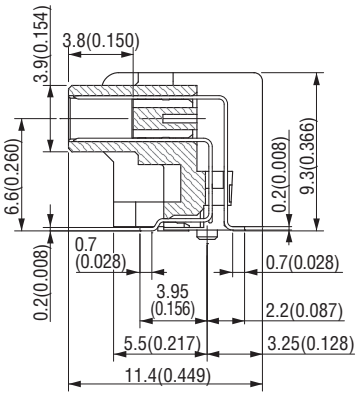

Packaging style
Tray

Product Table / Dimensions

No. of contacts	Part Number	A	B	C	D	E	F	G	Number of packaging
60	8601-060FL	28.70 (1.130)	28.50 (1.122)	27.60 (1.087)	23.10 (0.909)	22.00 (0.866)	21.30 (0.839)	18.415 (0.725)	40
120	8601-120FL	47.75 (1.880)	47.55 (1.872)	46.65 (1.837)	42.15 (1.659)	41.05 (1.616)	40.35 (1.589)	37.465 (1.475)	24
140	8601-140FL	54.10 (2.130)	53.90 (2.122)	53.00 (2.087)	48.50 (1.909)	47.40 (1.866)	46.70 (1.839)	43.815 (1.725)	24
160	8601-160FL	60.45 (2.380)	60.25 (2.372)	59.35 (2.337)	54.85 (2.159)	53.75 (2.116)	53.05 (2.089)	50.165 (1.975)	24
200	8601-200FL	73.15 (2.880)	72.95 (2.872)	72.05 (2.837)	67.55 (2.659)	66.45 (2.616)	65.75 (2.589)	62.865 (2.475)	20

8611-□□□S-□ (Plug, Straight)

Unit : mm(inch)

Printed Circuit Board Layout (Component Side View)

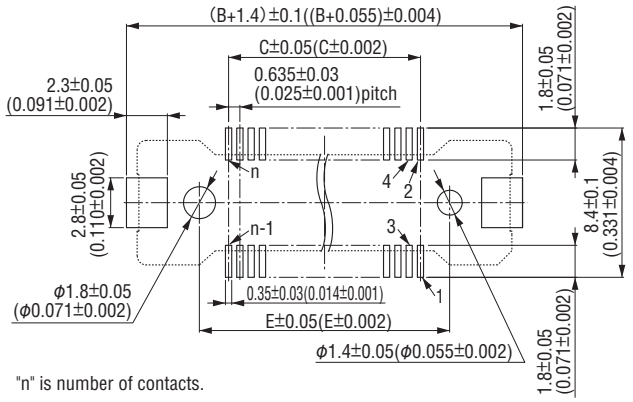

"n" is number of contacts.

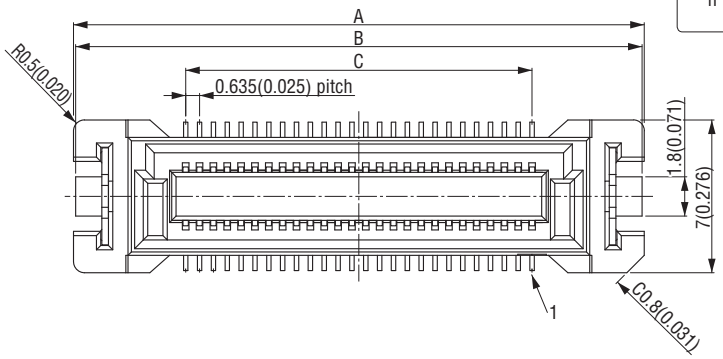

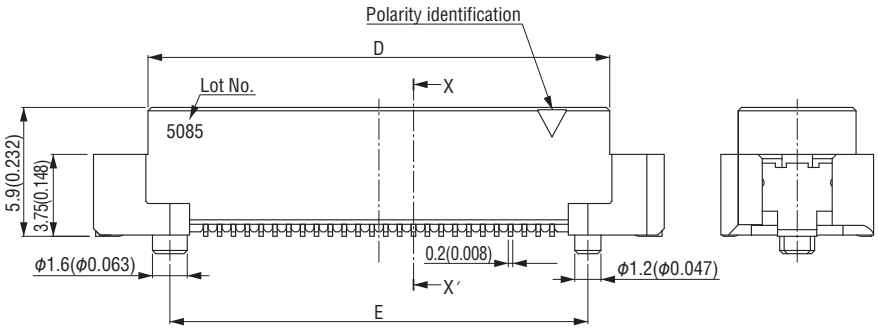

X-X′Cross Section

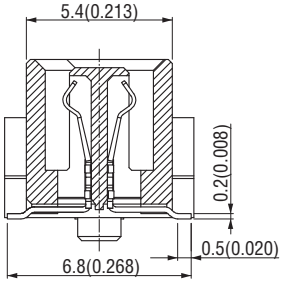

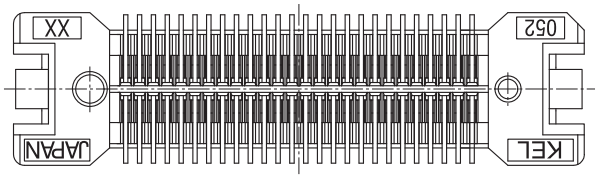

Packaging style
Tray

Product Table / Dimensions

No. of contacts	Part Number	A	B	C	D	E	Number of packaging
52	8611-052S-□	26.16 (1.030)	25.96 (1.022)	15.875 (0.625)	21.16 (0.833)	19.16 (0.754)	60
60	8611-060S-□	28.70 (1.130)	28.50 (1.122)	18.415 (0.725)	23.70 (0.933)	21.70 (0.854)	50
120	8611-120S-□	47.75 (1.880)	47.55 (1.872)	37.465 (1.475)	42.75 (1.683)	40.75 (1.604)	30
140	8611-140S-□	54.10 (2.130)	53.90 (2.122)	43.815 (1.725)	49.10 (1.933)	47.10 (1.854)	30
160	8611-160S-□	60.45 (2.380)	60.25 (2.372)	50.165 (1.975)	55.45 (2.183)	53.45 (2.104)	30

B.C.E. S.r.l. Via Regina Pacis, 54/c - I 41049 Sassuolo (MO) Tel.: (+39) 0536 811616 - Fax.: (+39) 0536 811500 e-mail: bce@bce.it - Website: www.bce.it

8611H-□□□FL (Plug, Right angle)

Unit : mm(inch)

Printed Circuit Board Layout (Component Side View)

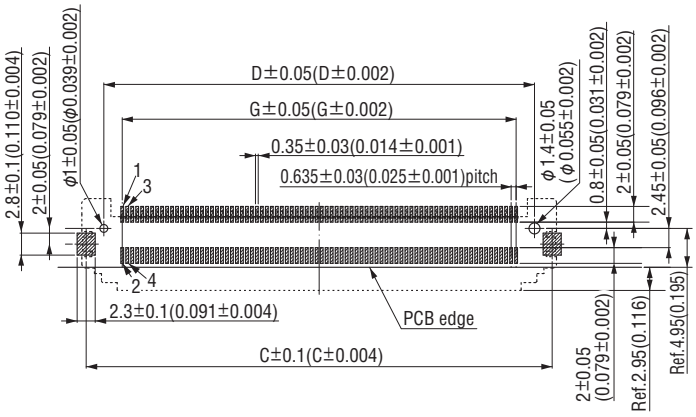

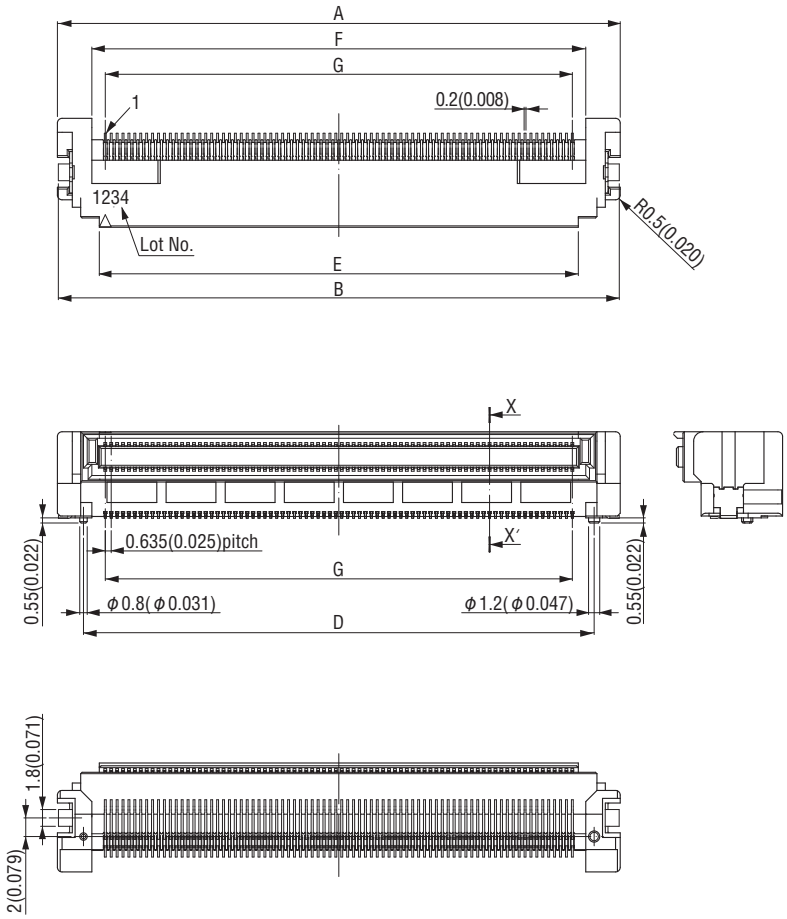

X-X′Cross Section

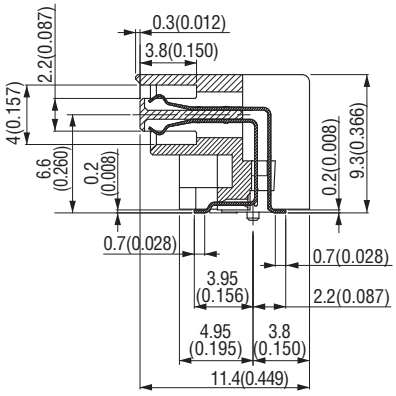

Packaging style
Tray

Product Table / Dimensions

No. of contacts	Part Number	A	B	C	D	E	F	G	Number of packaging
60	8611H-060FL	28.70 (1.130)	28.50 (1.122)	27.60 (1.087)	23.10 (0.909)	19.70 (0.776)	21.30 (0.839)	18.415 (0.725)	40
120	8611H-120FL	47.75 (1.880)	47.55 (1.872)	46.65 (1.837)	42.15 (1.659)	38.75 (1.526)	40.35 (1.589)	37.465 (1.475)	24
140	8611H-140FL	54.10 (2.130)	53.90 (2.122)	53.00 (2.087)	48.50 (1.909)	45.10 (1.776)	46.70 (1.839)	43.815 (1.725)	24
160	8611H-160FL	60.45 (2.380)	60.25 (2.372)	59.35 (2.337)	54.85 (2.159)	51.45 (2.026)	53.05 (2.089)	50.165 (1.975)	24
200	8611H-200FL	73.15 (2.880)	72.95 (2.872)	72.05 (2.837)	67.55 (2.659)	64.15 (2.526)	65.75 (2.589)	62.865 (2.475)	20

8602E SERIES

0.635mm PITCH CONNECTOR / EJECTOR TYPE

RoHS Compliant

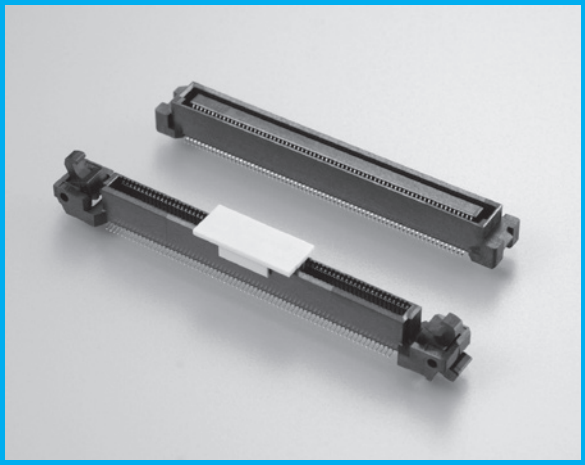

FEATURES

- Board-to-board connector including a locking mechanism for a mated connector.
- High reliable design with effective mating length of 1.4mm(0.055").
- Three sizes : 60, 140 and 160 pins.
- Designed to prevent mis-insertion.
- Coplanarity of 0.1mm.
- Provided with or without a Pick & Place cap.
- Stacked mating height of 8mm.

ORDER CODE

8602E - ☐☐☐ S - ☐

① ② ③ ④

*Please order in multiples of the quantity per package.

①	【Type】 8602E : Receptacle, Ejector type
②	【Number of contacts】 060 : 60pin 140 : 140pin 160 : 160pin
③	【Contact tail style】 S : Straight
④	【Pick & Place cap】 P : With Pick&Place cap Omit : Without Pick&Place cap

ORDER CODE

8630E - ☐☐☐ S - ☐

① ② ③ ④

*Please order in multiples of the quantity per package.

①	【Type】 8630E : Plug
②	【Number of contacts】 060 : 60pin 140 : 140pin 160 : 160pin
③	【Contact tail style】 S : Straight
④	【Pick & Place cap】 P : With Pick&Place cap Omit : Without Pick&Place cap

SPECIFICATIONS

Material and plating	
Insulator material	Glass-filled LCP (UL94V-0), Black
Contact material	Copper alloy
Contact plating	Gold over Nickel
Lock material	Glass-filled LCP (UL94V-0),Black
Pick&Place cap material	Glass-filled Modified polyamide 6T (UL94V-0), [8602E] Beige [8630E]Off-white

Electrical Characteristics	
Current rating	0.5A per contact
Contact resistance	50mΩ max.
Dielectric withstanding voltage	200V AC for 1 minute
Insulation resistance	100MΩ min. at 250V DC
Operating temperature	-40°C to +85°C

8602E Series Locking Ejector System

Unit : mm(inch)

◆Way to insert

Open the ejectors of 8602E Series and insert into 8630E Series until the latches fully engage.

◆Way to withdrawal

Press on both sides of the 8602E Series ejectors to release the connector from the 8630E Series.

◆Insertion Process

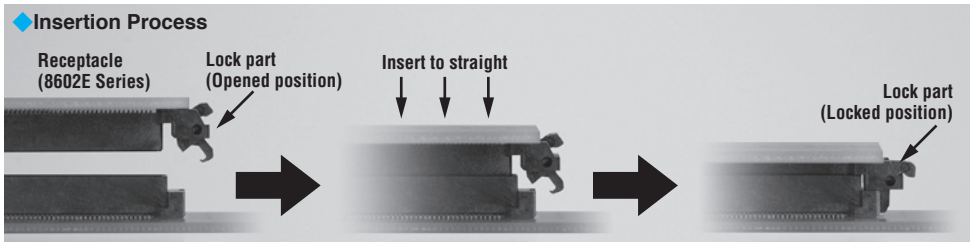

*Please insert and withdraw connector as straight as possible to avoid bending contacts or breaking the insulator.

8602E-□□□S-□ (Receptacle, Straight, Ejector type)

Unit : mm(inch)

Printed Circuit Board Layout (Component Side View)

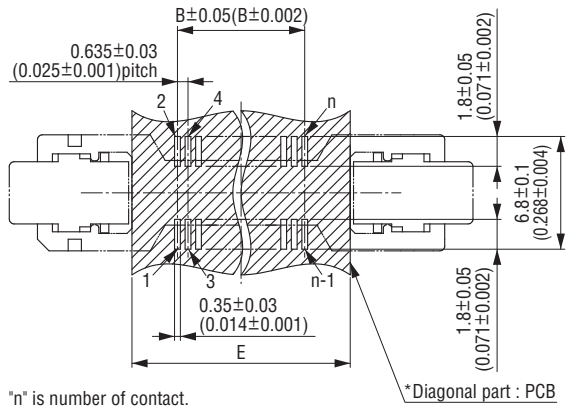

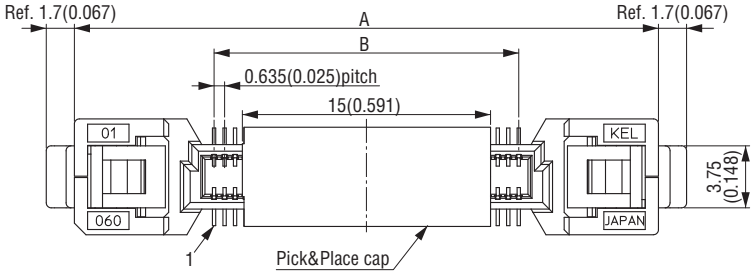

X-X′Cross Section

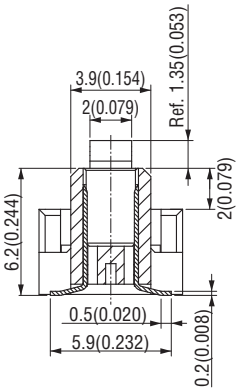

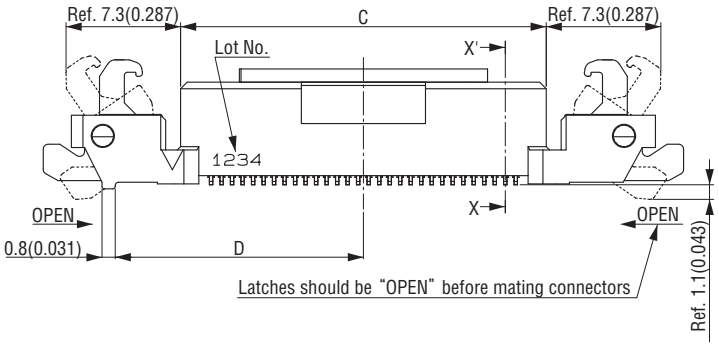

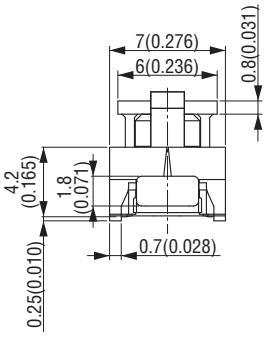

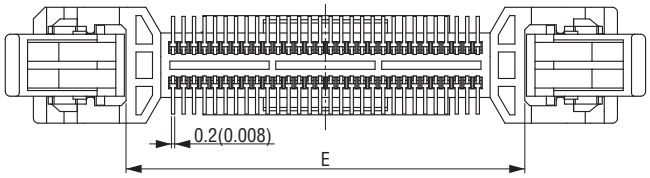

Packaging style
Tray

Product Table / Dimensions

No. of contacts	Part Number	A	B	C	D	E	Number of packaging
60	8602E-060S-□	35.30 (1.390)	18.415 (0.725)	22.10 (0.870)	15.000 (0.591)	24.10 (0.949)	40
140	8602E-140S-□	60.70 (2.390)	43.815 (1.725)	47.50 (1.870)	27.700 (1.091)	49.50 (1.949)	30
160	8602E-160S-□	67.05 (2.640)	50.165 (1.975)	53.85 (2.120)	30.875 (1.216)	55.85 (2.199)	30

8630E-□□□S-□ (Plug, Straight)

Unit : mm(inch)

Printed Circuit Board Layout (Component Side View)

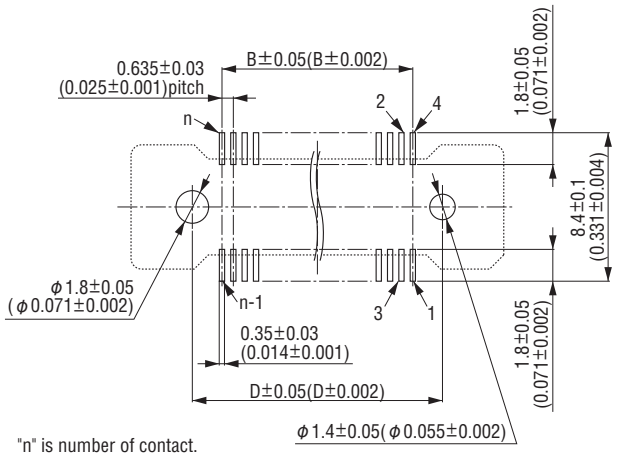

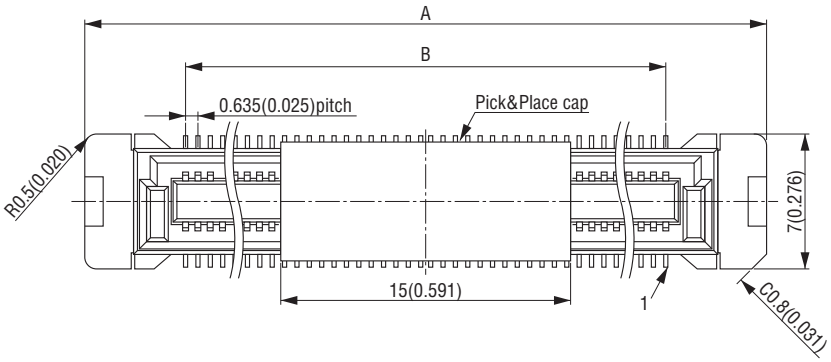

X-X′Cross Section

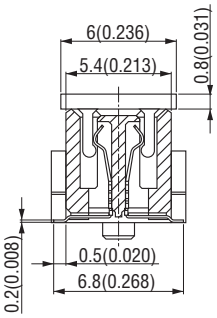

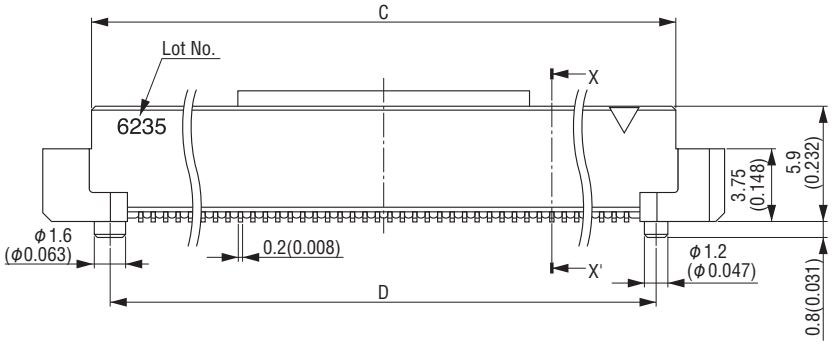

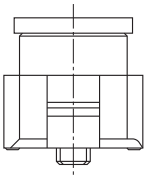

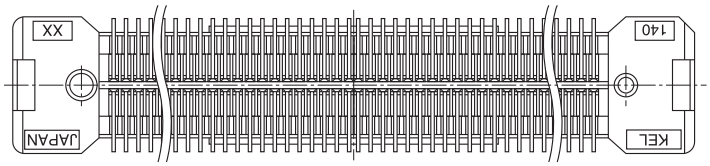

Packaging style
Tray

Product Table / Dimensions

No. of contacts	Part Number	A	B	C	D	Number of packaging
60	8630E-060S-□	28.70 (1.130)	18.415 (0.725)	23.70 (0.933)	21.70 (0.854)	50
140	8630E-140S-□	54.10 (2.130)	43.815 (1.725)	49.10 (1.933)	47.10 (1.854)	30
160	8630E-160S-□	60.45 (2.380)	50.165 (1.975)	55.45 (2.183)	53.45 (2.104)	30

B.C.E. S.r.l. Via Regina Pacis, 54/c - I 41049 Sassuolo (MO) Tel.: (+39) 0536 811616 - Fax.: (+39) 0536 811500 e-mail: bce@bce.it - Website: www.bce.it

87 SERIES

1mm PITCH CONNECTOR

RoHS Compliant

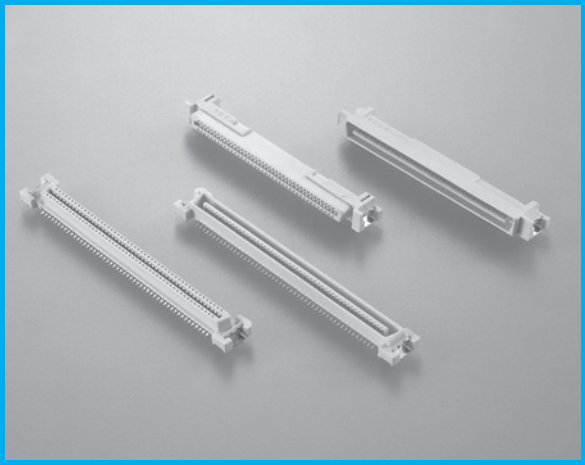

FEATURES

- Low profile(Stacked height : 5mm).
- Coplanarity 0.1mm, Skew ±0.1mm.
- Horizontal, Vertical and Stacked mating combinations.
- SMT retention clips reduce the stress on SMT lead pins.
- 75% smaller than existing half pitch connectors.
- Positioning posts for placement by hand.

*Care is required in reflow working; Please contact your local KEL sales office.

ORDER CODE

87BFN-□□□ □-□F

① ② ③ ④

*Please order in multiples of the quantity per package.

①	【Type】 87BFN : Receptacle
②	【Number of contacts】 030 : 30 pin 050 : 50 pin 080 : 80 pin 100 : 100 pin 120 : 120 pin(excl. S type)
③	【Contact tail style】 S : Straight S-1 : Straight (With Pick&Place cap) R-3 : Right angle
④	【RoHS】 F : RoHS compliant

ORDER CODE

87BMN-□□□ □-□F

① ② ③ ④

*Please order in multiples of the quantity per package.

①	【Type】 87BMN : Plug
②	【Number of contacts】 030 : 30 pin 050 : 50 pin 080 : 80 pin 100 : 100 pin 120 : 120 pin
③	【Contact tail style】 S : Straight S-1 : Straight (With Pick&Place cap) R-3 : Right angle
④	【RoHS】 F : RoHS compliant

SPECIFICATIONS

Material and plating		Electrical Characteristics	
Insulator material	Glass-filled LCP (UL94V-0), White	Current rating	0.5A per contact
Contact material	Copper alloy	Contact resistance	50mΩ max.
Contact plating	Gold over Nickel	Dielectric withstanding voltage	315V AC for 1 minute
Pick&Place cap material	Glass-filled Modified polyamide 6T (UL94V-0), Black	Insulation resistance	1,000MΩ min. at 500V DC
		Operating temperature	-40°C to +85°C

Mating Drawing

Unit : mm(inch)

◆Stacked Mating

87BMN-□□□S-□F

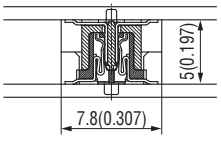

87BFN-□□□S-□F

◆Horizontal Mating

87BFN-□□□R-3F 87BMN-□□□R-3F

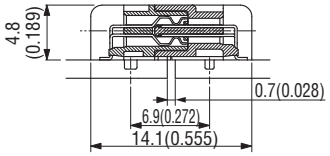

◆Vertical Mating

87BMN-□□□R-3F

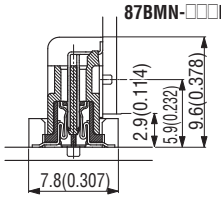

87BFN-□□□S-□F

87BFN-□□□R-3F

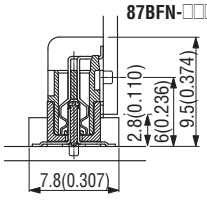

87BMN-□□□S-□F

87BFN-□□□S-□F (Receptacle, Straight)

Unit : mm(inch)

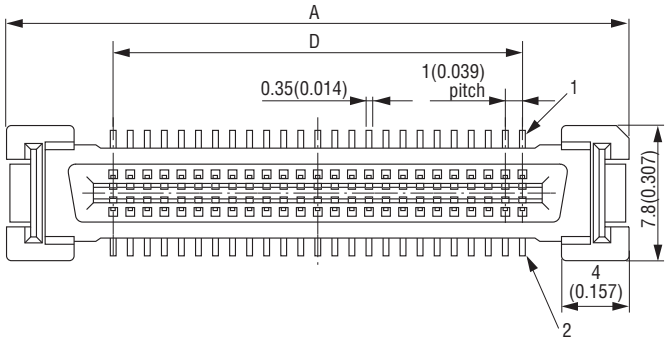

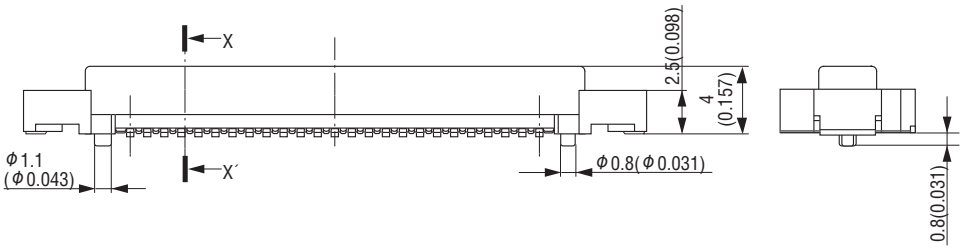

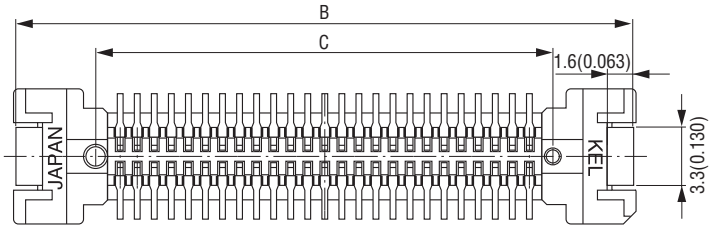

X-X′Cross Section

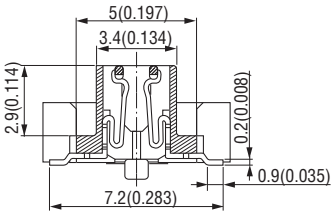

SMT lead thickness: t=0.2(0.008)
Metal retention pad thickness: t=0.3(0.012)

Printed Circuit Board Layout (Component Side View)

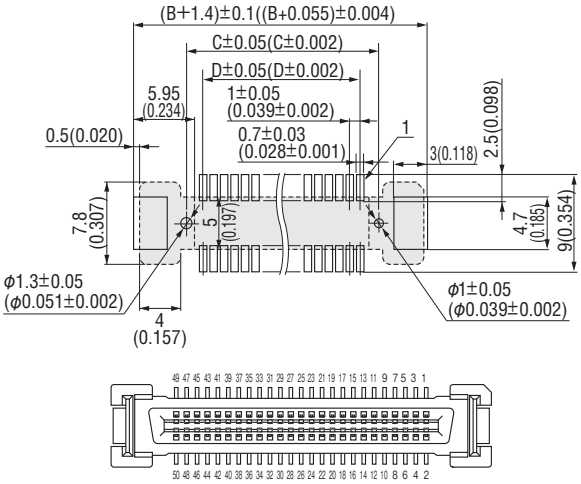

87BFN-050S-□F Contact designation

Packaging style
Tray

Product Table / Dimensions

No. of contacts	Part Number	A	B	C	D	Number of packaging
30	87BFN-030S-□F	26.5 (1.043)	26.1 (1.028)	17.0 (0.669)	14.0 (0.551)	80
50	87BFN-050S-□F	36.5 (1.437)	36.1 (1.421)	27.0 (1.063)	24.0 (0.945)	80
80	87BFN-080S-□F	51.5 (2.028)	51.1 (2.012)	42.0 (1.654)	39.0 (1.535)	40
100	87BFN-100S-□F	61.5 (2.421)	61.1 (2.406)	52.0 (2.047)	49.0 (1.929)	40
120	87BFN-120S-1F	71.5 (2.815)	71.1 (2.799)	62.0 (2.441)	59.0 (2.323)	40

87BFN-□□□R-3F (Receptacle, Right angle)

Unit : mm(inch)

Printed Circuit Board Layout (Component Side View)

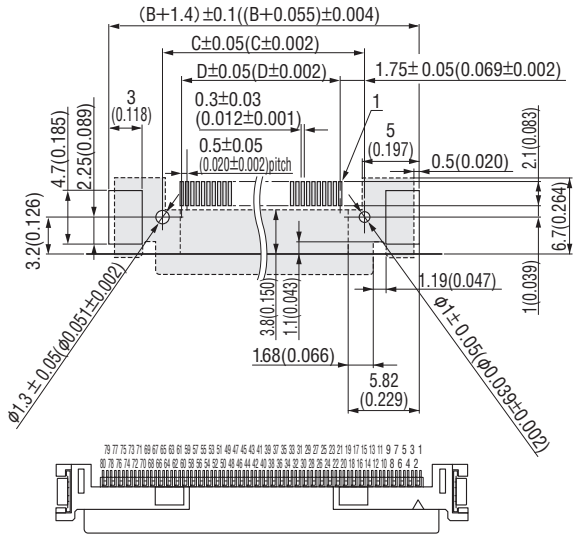

87BFN-080R-3F Contact designation

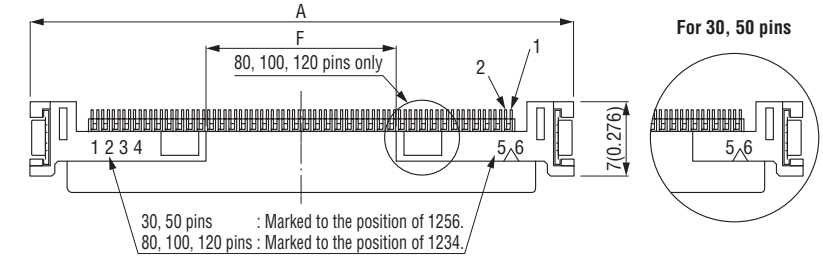

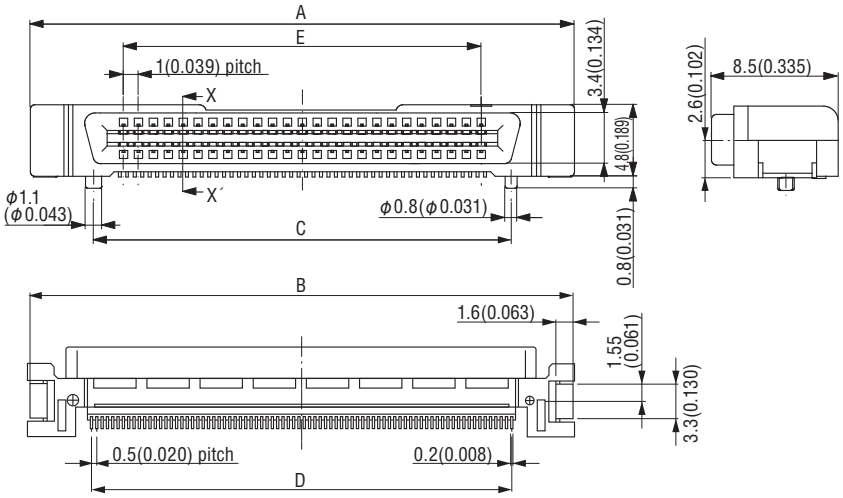

X-X′Cross Section

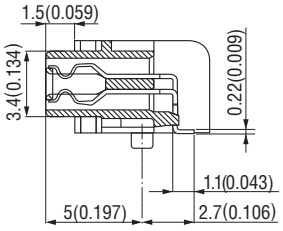

SMT lead thickness: t=0.22(0.009)
Metal retention pad thickness: t=0.3(0.012)

Packaging style
Tray

Product Table / Dimensions

No. of contacts	Part Number	A	B	C	D	E	F	Number of packaging
30	87BFN-030R-3F	26.5 (1.043)	26.1 (1.028)	18.0 (0.709)	14.5 (0.571)	14.0 (0.551)	10.0 (0.394)	80
50	87BFN-050R-3F	36.5 (1.437)	36.1 (1.421)	28.0 (1.102)	24.5 (0.965)	24.0 (0.945)	15.0 (0.591)	80
80	87BFN-080R-3F	51.5 (2.028)	51.1 (2.012)	43.0 (1.693)	39.5 (1.555)	39.0 (1.535)	18.0 (0.709)	40
100	87BFN-100R-3F	61.5 (2.421)	61.1 (2.406)	53.0 (2.087)	49.5 (1.949)	49.0 (1.929)	18.0 (0.709)	40
120	87BFN-120R-3F	71.5 (2.815)	71.1 (2.799)	63.0 (2.480)	59.5 (2.343)	59.0 (2.323)	20.0 (0.787)	40

87BMN-□□□S-□F (Plug, Straight)

Unit : mm(inch)

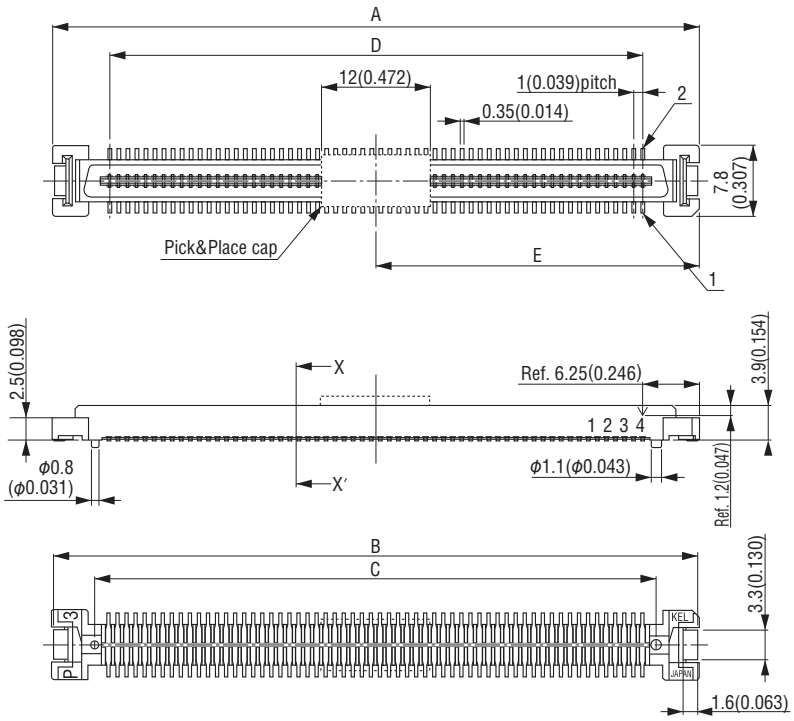

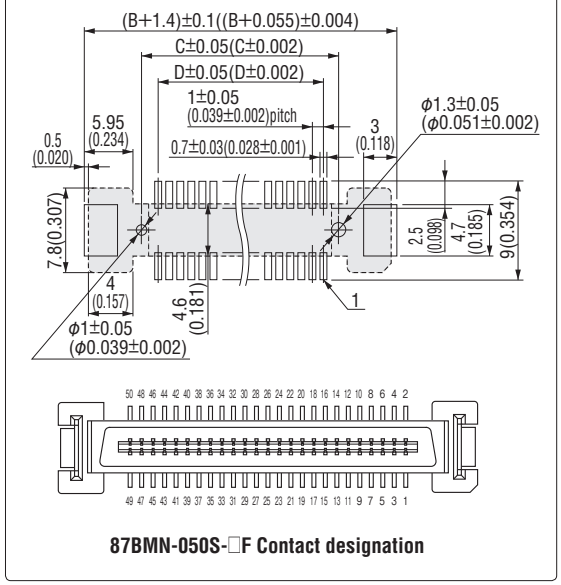

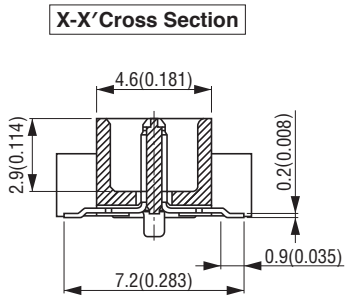

SMT lead thickness: t = 0.2(0.008)
Metal retention pad thickness: t = 0.3(0.012)

Packaging style
Tray

Product Table / Dimensions

No. of contacts	Part Number	A	B	C	D	E	Number of packaging
30	87BMN-030S-□F	26.5 (1.043)	26.1 (1.028)	17.0 (0.669)	14.0 (0.551)	13.25 (0.522)	80
50	87BMN-050S-□F	36.5 (1.437)	36.1 (1.421)	27.0 (1.063)	24.0 (0.945)	18.25 (0.719)	80
80	87BMN-080S-□F	51.5 (2.028)	51.1 (2.012)	42.0 (1.654)	39.0 (1.535)	25.75 (1.014)	40
100	87BMN-100S-□F	61.5 (2.421)	61.1 (2.406)	52.0 (2.047)	49.0 (1.929)	30.75 (1.211)	40
120	87BMN-120S-□F	71.5 (2.815)	71.1 (2.799)	62.0 (2.441)	59.0 (2.323)	35.75 (1.407)	40

B.C.E. S.r.l. Via Regina Pacis, 54/c - I 41049 Sassuolo (MO) Tel.: (+39) 0536 811616 - Fax.: (+39) 0536 811500 e-mail: bce@bce.it - Website: www.bce.it

87BMN-□□□R-3F (Plug, Right angle)

Unit : mm(inch)

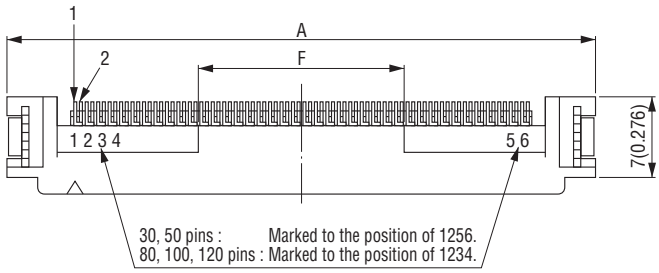

Printed Circuit Board Layout (Component Side View)

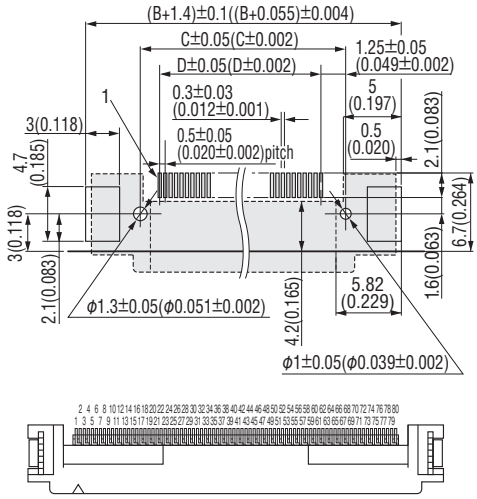

87BMN-050R-3F Contact designation

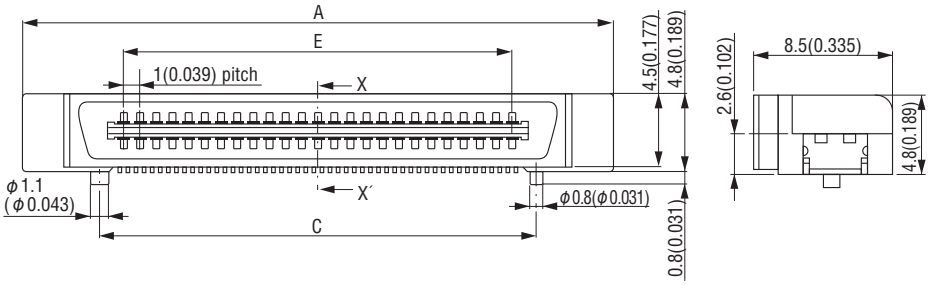

X-X′Cross Section

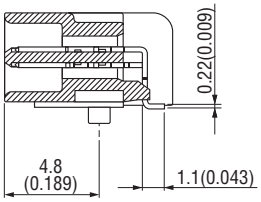

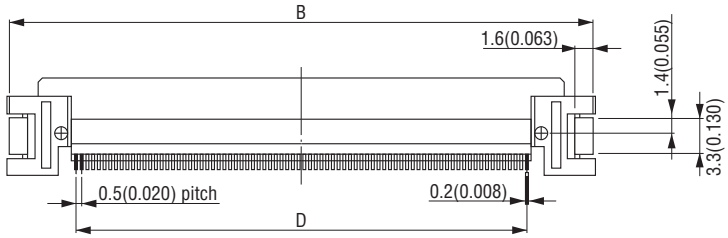

SMT lead thickness: T=0.22(0.009)
Metal retention pad thickness: T=0.3(0.012)

Packaging style
Tray

Product Table / Dimensions

No. of contacts	Part Number	A	B	C	D	E	F	Number of packaging
30	87BMN-030R-3F	26.5 (1.043)	26.1 (1.028)	17.0 (0.669)	14.5 (0.571)	14.0 (0.551)	10.0 (0.394)	80
50	87BMN-050R-3F	36.5 (1.437)	36.1 (1.421)	27.0 (1.063)	24.5 (0.965)	24.0 (0.945)	15.0 (0.591)	80
80	87BMN-080R-3F	51.5 (2.028)	51.1 (2.012)	42.0 (1.654)	39.5 (1.555)	39.0 (1.535)	18.0 (0.709)	40
100	87BMN-100R-3F	61.5 (2.421)	61.1 (2.406)	52.0 (2.047)	49.5 (1.949)	49.0 (1.929)	18.0 (0.709)	40
120	87BMN-120R-3F	71.5 (2.815)	71.1 (2.799)	62.0 (2.441)	59.5 (2.343)	59.0 (2.323)	20.0 (0.787)	40

DJ SERIES

1mm PITCH CONNECTOR FOR REMOVABLE MEDIA DEVICE

RoHS Compliant

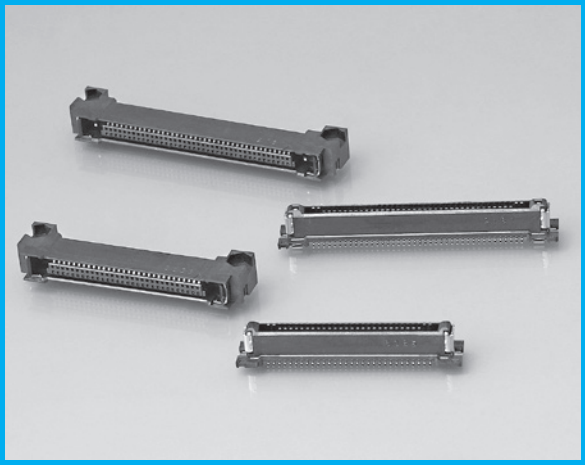

FEATURES

- Power contacts have a 5A (max.) current rating.
- Signal contacts are designed with a 2-level sequence.
- The conductivity of the retention clips for the plug and receptacle allows frame ground connection between devices.
- The mating position can be adjusted by selecting an appropriate standoff height in the mechanical design phase.
- Absorbs -1.5mm gap in XY directions when mating.

ORDER CODE

DJ0□-□□□S-F

① ② ③ ④

*Please order in multiples of the quantity per package.

①	【Type】Receptacle DJ03 : With power contact DJ04 : Without power contact
②	【Number of contacts】040 : 40 pin 050 : 50 pin 060 : 60 pin 080 : 80 pin
③	【Contact tail style】S : Straight
④	【RoHS】F : RoHS compliant

ORDER CODE

DJ3□-□□□□□-□-F

① ② ③ ④ ⑤

*Please order in multiples of the quantity per package.

①	【Type】Plug DJ33 : With power contact DJ34 : Without power contact
②	【Number of contacts】040 : 40 pin 050 : 50 pin 060 : 60 pin 080 : 80 pin
③	【Contact tail style】L : Right angle FL:Flexible right angle
④	【Stand off height】(FL type) T : 1.0mm(0.039'') V : 2.0mm(0.079'') Y : 3.0mm(0.118'') Z : 4.0mm(0.157'')
⑤	【RoHS】F : RoHS compliant

SPECIFICATIONS

Material and plating	
Insulator material	Glass-filled LCP (UL94V-0), Black
Alignment plate material	Glass-filled 46 Nylon (UL94V-0), Black
Contact material	Copper alloy
Contact plating	Gold over Nickel
Power contact material	Copper alloy
Power contact plating	Gold over Nickel
Retention clip material	Tin alloy
Retention clip plating	Gold over Nickel
Frame ground contact material	Tin alloy
Frame ground contact mating	Nickel

Electrical Characteristics	
Current rating	Signal contact:0.5A per contact Power contact:5A per contact
Contact resistance	Signal contact:40mΩ max. Power contact:15mΩ max.
Dielectric withstanding voltage	300V AC for 1 minute
Insulation resistance	1,000MΩ min. at 250V DC
Operating temperature	-55°C to +85°C

◆Product Outline

DJ series is a 1mm pitch,2 piece connector system which was developed for the next generation of removable media devices. The DJ series offers Straight/SMT type (Receptacle) for the removable media Device side,we also Right angle/SMT types (Plug) in 5 variations(standard,1mm,2mm,3mm and 4mm) so that you can freely choose the mating position on the main board side. The superior design of our connectors is helpful in your system's design. Example: the guide structure for blind mating, structures that protect contacts from damage during mismatched insertion, and mounting hardware to increase mounted strength of connectors. This connector can be used in "Hot Swap" applications for HDD,FDD,CD-ROM drives and DVD,etc.with power supply turned on and frame ground implemented between mainboard and devices. KEL also provides this series "with power contacts". These contacts are effective for use in battery pack applications.The DJ series connector is designed exclusively for removable media devices and batterypacks.

B.C.E. S.r.l. Via Regina Pacis, 54/c - I 41049 Sassuolo (MO) Tel.: (+39) 0536 811616 - Fax.: (+39) 0536 811500 e-mail: bce@bce.it - Website: www.bce.it

DJ03-□□□S-F (Receptacle, Straight, With power contacts)

Unit : mm(inch)

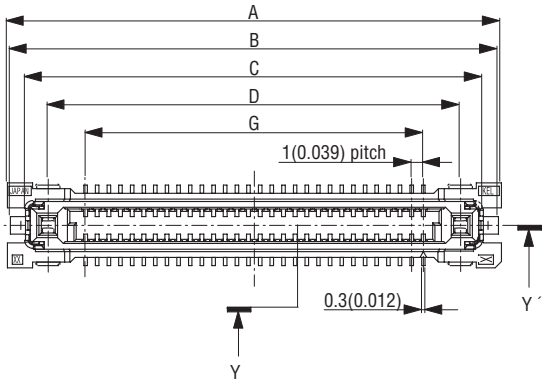

Printed Circuit Board Layout (Component Side View)

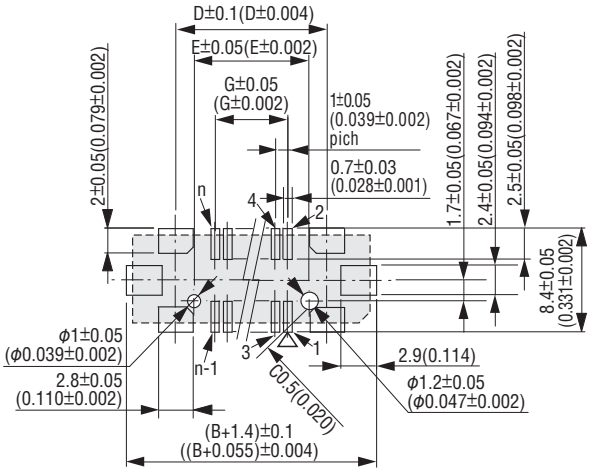

▽=Polarity identification "n" is number of contact.

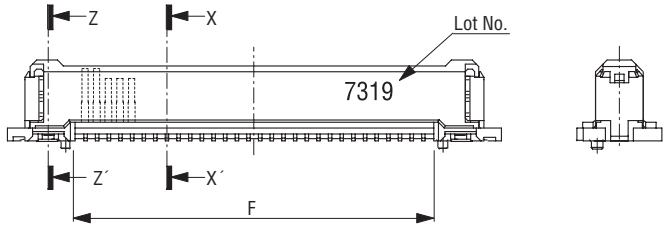

X-X´Cross Section

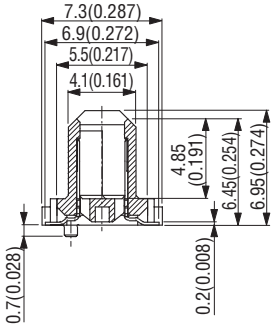

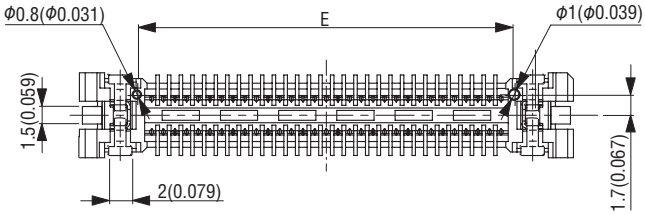

Z-Z´Cross Section

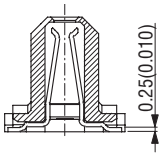

Y-Y´Cross Section

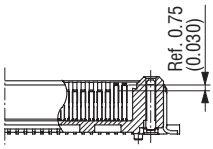

Packaging style
Tray

Product Table / Dimensions

No. of contacts	Part Number	A	B	C	D	E	F	G	Number of packaging
40	DJ03-040S-F	32.4 (1.276)	32.0 (1.260)	29.4 (1.157)	25.4 (1.000)	22.4 (0.882)	20.8 (0.819)	19.0 (0.748)	60
50	DJ03-050S-F	37.4 (1.472)	37.0 (1.457)	34.4 (1.354)	30.4 (1.197)	27.4 (1.079)	25.8 (1.016)	24.0 (0.945)	50
60	DJ03-060S-F	42.4 (1.669)	42.0 (1.654)	39.4 (1.551)	35.4 (1.394)	32.4 (1.276)	30.8 (1.213)	29.0 (1.142)	50
80	DJ03-080S-F	52.4 (2.063)	52.0 (2.047)	49.4 (1.945)	45.4 (1.787)	42.4 (1.669)	40.8 (1.606)	39.0 (1.535)	40

B.C.E. S.r.l. Via Regina Pacis, 54/c - I 41049 Sassuolo (MO) Tel.: (+39) 0536 811616 - Fax.: (+39) 0536 811500 e-mail: bce@bce.it - Website: www.bce.it

DJ04-□□□S-F (Receptacle, Straight, Without power contacts)

Unit : mm(inch)

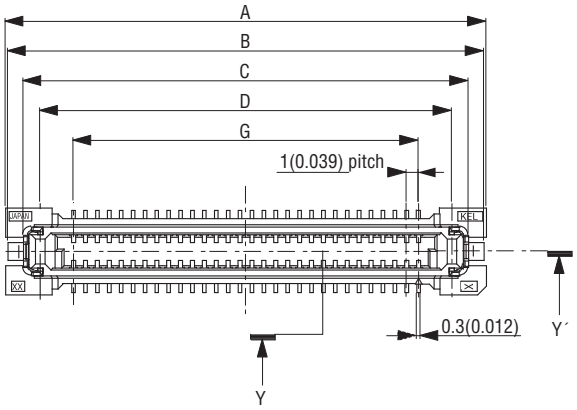

Printed Circuit Board Layout (Component Side View)

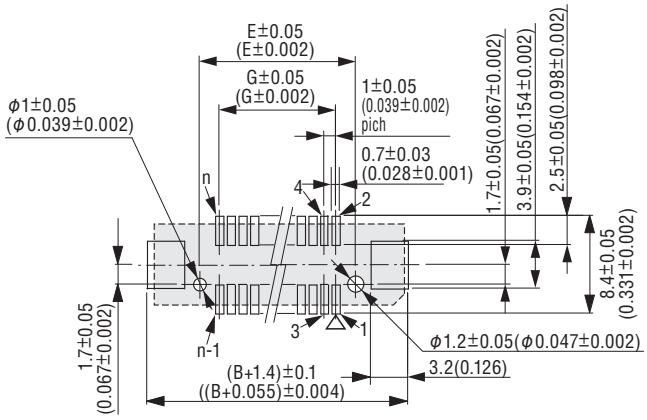

▽=Polarity identification "n" is number of contact.

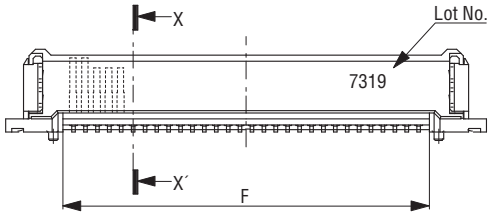

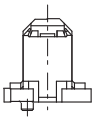

X-X´Cross Section

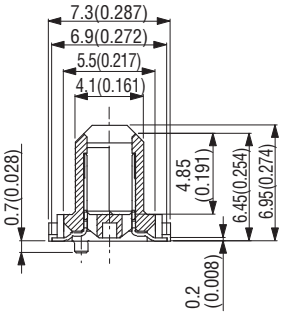

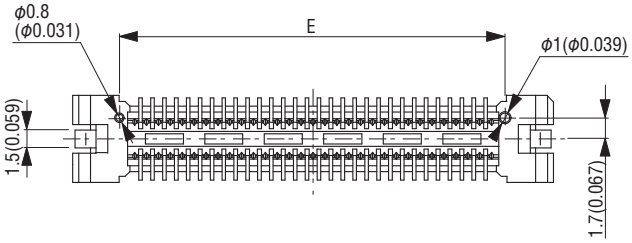

Y-Y´Cross Section

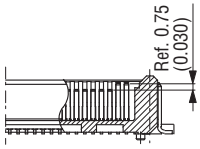

Packaging style
Tray

Product Table / Dimensions

No. of contacts	Part Number	A	B	C	D	E	F	G	Number of packaging
40	DJ04-040S-F	30.4 (1.197)	30.0 (1.181)	27.4 (1.079)	24.6 (0.969)	22.4 (0.882)	20.8 (0.819)	19.0 (0.748)	70
50	DJ04-050S-F	35.4 (1.394)	35.0 (1.378)	32.4 (1.276)	29.6 (1.165)	27.4 (1.079)	25.8 (1.016)	24.0 (0.945)	60
60	DJ04-060S-F	40.4 (1.591)	40.0 (1.575)	37.4 (1.472)	34.6 (1.362)	32.4 (1.276)	30.8 (1.213)	29.0 (1.142)	50
80	DJ04-080S-F	50.4 (1.984)	50.0 (1.969)	47.4 (1.866)	44.6 (1.756)	42.4 (1.669)	40.8 (1.606)	39.0 (1.535)	40

B.C.E. S.r.l. Via Regina Pacis, 54/c - I 41049 Sassuolo (MO) Tel.: (+39) 0536 811616 - Fax.: (+39) 0536 811500 e-mail: bce@bce.it - Website: www.bce.it

DJ33-□□□L-F (Plug, Right angle, With power contacts)

Unit : mm(inch)

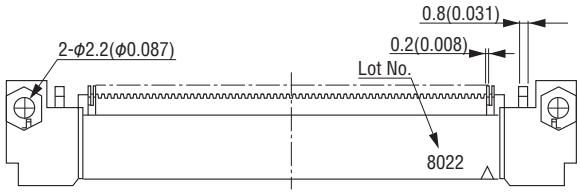

Printed Circuit Board Layout (Component Side View)

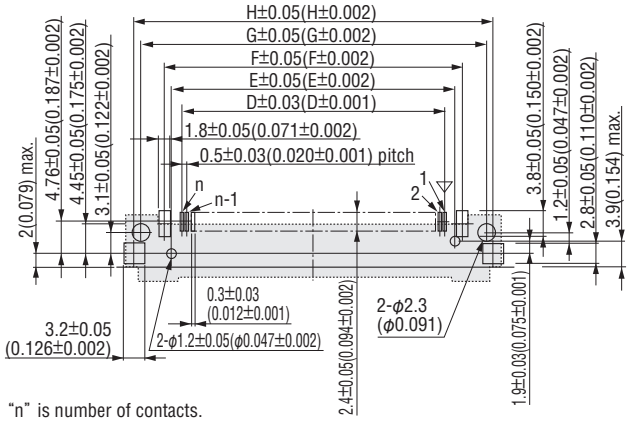

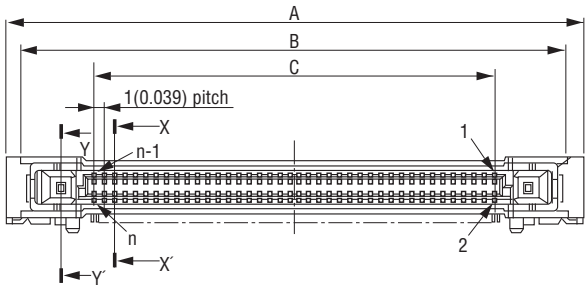

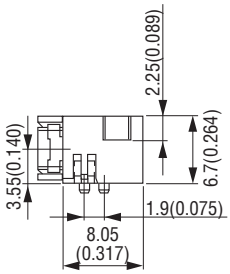

X-X′Cross Section

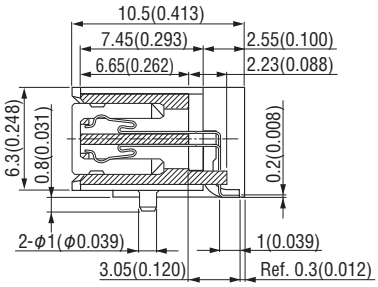

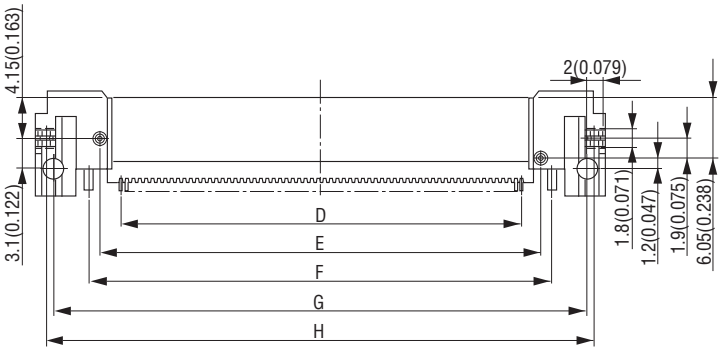

Y-Y′Cross Section

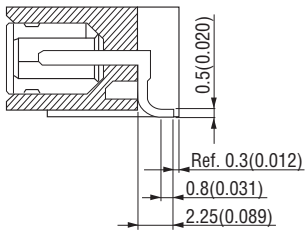

Packaging style
Tray

Product Table / Dimensions

No. of contacts	Part Number	A	B	C	D	E	F	G	H	Number of packaging
40	DJ33-040L-F	36.50 (1.437)	33.20 (1.307)	19.00 (0.748)	19.50 (0.768)	23.28 (0.917)	25.40 (1.000)	32.36 (1.274)	33.98 (1.338)	60
50	DJ33-050L-F	41.50 (1.634)	38.20 (1.504)	24.00 (0.945)	24.50 (0.965)	28.28 (1.113)	30.40 (1.197)	37.36 (1.471)	38.98 (1.535)	50
60	DJ33-060L-F	46.50 (1.831)	43.20 (1.701)	29.00 (1.142)	29.50 (1.161)	33.28 (1.310)	35.40 (1.394)	42.36 (1.668)	43.98 (1.731)	40
80	DJ33-080L-F	56.50 (2.224)	53.20 (2.094)	39.00 (1.535)	39.50 (1.555)	43.28 (1.704)	45.40 (1.787)	52.36 (2.061)	53.98 (2.125)	40

DJ33-□□□FL-□-F (Plug, Flexible right angle, With power contacts)

Unit : mm(inch)

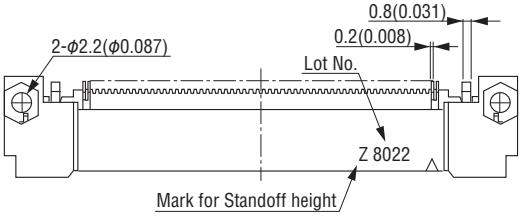

Printed Circuit Board Layout (Component Side View)

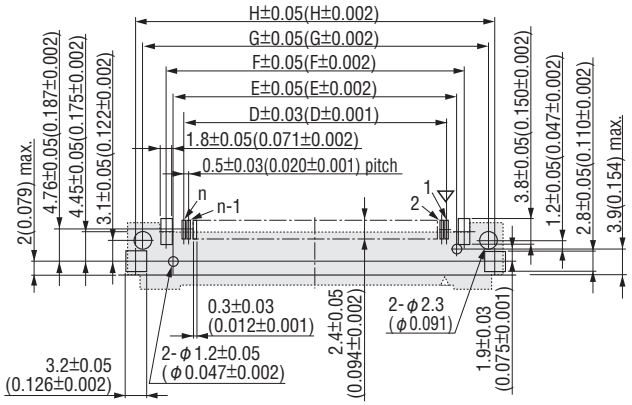

"n" is number of contacts.

▽=Polarity identification

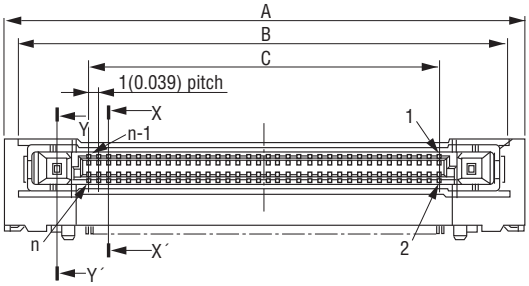

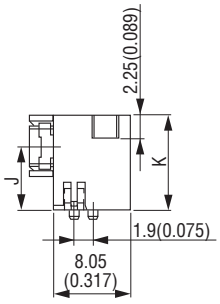

X-X´Cross Section

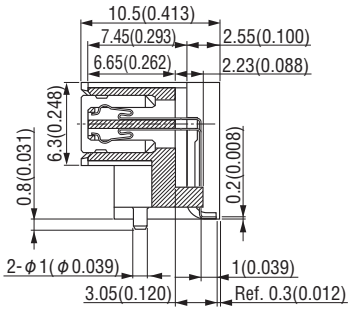

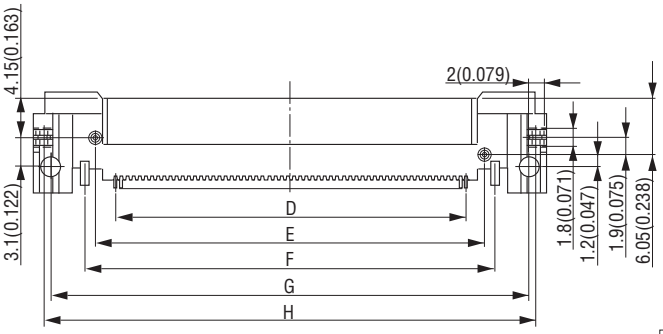

Y-Y´Cross Section

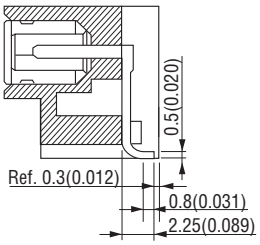

Product Table / Mating Height

Part Number	J	K
DJ33-□□□FL-T-F	4.55 (0.179)	7.70 (0.303)
DJ33-□□□FL-V-F	5.55 (0.219)	8.70 (0.343)
DJ33-□□□FL-Y-F	6.55 (0.258)	9.70 (0.382)
DJ33-□□□FL-Z-F	7.55 (0.297)	10.70 (0.421)

Packaging style
Tray

Product Table / Dimensions

No. of contacts	Part Number	A	B	C	D	E	F	G	H	Number of packaging
40	DJ33-040FL-□-F	36.50 (1.437)	33.20 (1.307)	19.00 (0.748)	19.50 (0.768)	23.28 (0.917)	25.40 (1.000)	32.36 (1.274)	33.98 (1.338)	60
50	DJ33-050FL-□-F	41.50 (1.634)	38.20 (1.504)	24.00 (0.945)	24.50 (0.965)	28.28 (1.113)	30.40 (1.197)	37.36 (1.471)	38.98 (1.535)	50
60	DJ33-060FL-□-F	46.50 (1.831)	43.20 (1.701)	29.00 (1.142)	29.50 (1.161)	33.28 (1.310)	35.40 (1.394)	42.36 (1.668)	43.98 (1.731)	40
80	DJ33-080FL-□-F	56.50 (2.224)	53.20 (2.094)	39.00 (1.535)	39.50 (1.555)	43.28 (1.704)	45.40 (1.787)	52.36 (2.061)	53.98 (2.125)	40

DJ34-□□□L-F (Plug, Right angle, Without power contacts)

Unit : mm(inch)

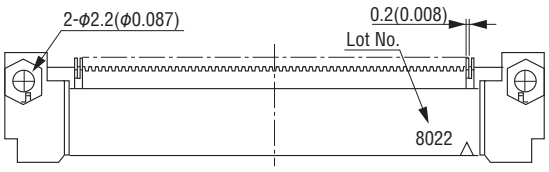

Printed Circuit Board Layout (Component Side View)

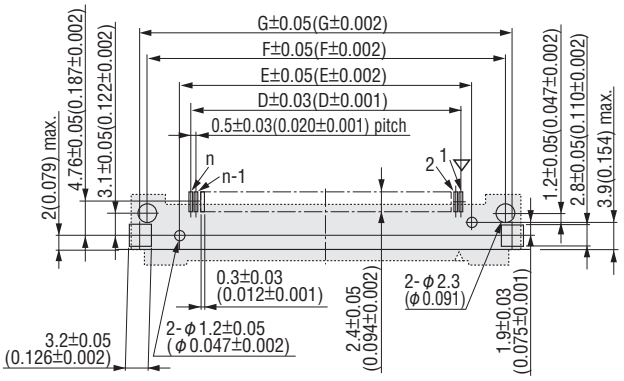

"n" is number of contacts.
▽=Polarity identification

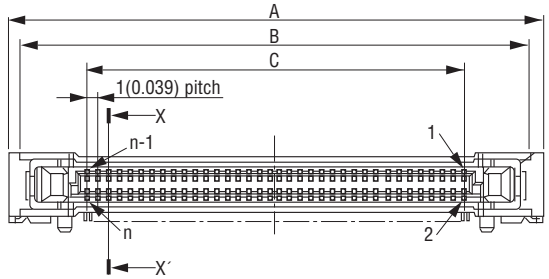

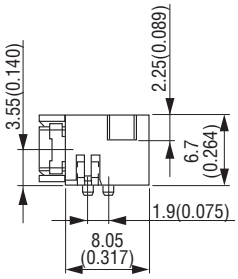

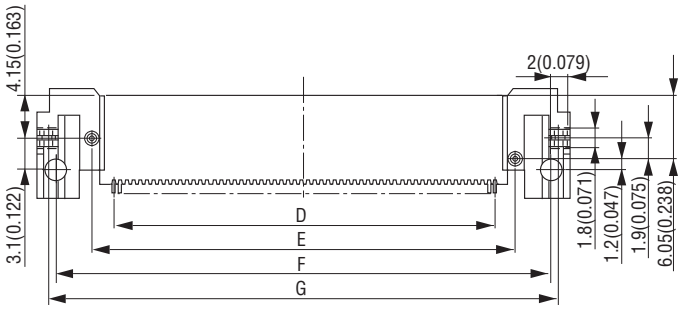

X-X′Cross Section

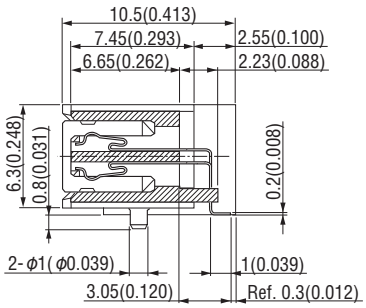

Packaging style
Tray

Product Table / Dimensions

No. of contacts	Part Number	A	B	C	D	E	F	G	Number of packaging
40	DJ34-040L-F	34.50 (1.358)	31.20 (1.228)	19.00 (0.748)	19.50 (0.768)	23.28 (0.917)	30.36 (1.195)	31.98 (1.259)	60
50	DJ34-050L-F	39.50 (1.555)	36.20 (1.425)	24.00 (0.945)	24.50 (0.965)	28.28 (1.113)	35.36 (1.392)	36.98 (1.456)	50
60	DJ34-060L-F	44.50 (1.752)	41.20 (1.622)	29.00 (1.142)	29.50 (1.161)	33.28 (1.310)	40.36 (1.589)	41.98 (1.653)	50
80	DJ34-080L-F	54.50 (2.146)	51.20 (2.016)	39.00 (1.535)	39.50 (1.555)	43.28 (1.704)	50.36 (1.983)	51.98 (2.046)	40

B.C.E. S.r.l. Via Regina Pacis, 54/c - I 41049 Sassuolo (MO) Tel.: (+39) 0536 811616 - Fax.: (+39) 0536 811500 e-mail: bce@bce.it - Website: www.bce.it

DJ34-□□□FL-□-F (Plug, Flexible right angle, Without power contacts)

Unit : mm(inch)

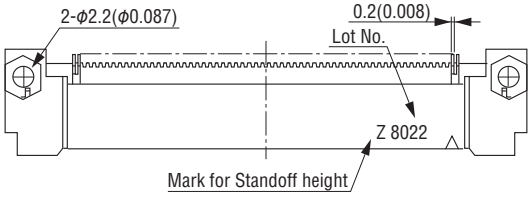

Printed Circuit Board Layout (Component Side View)

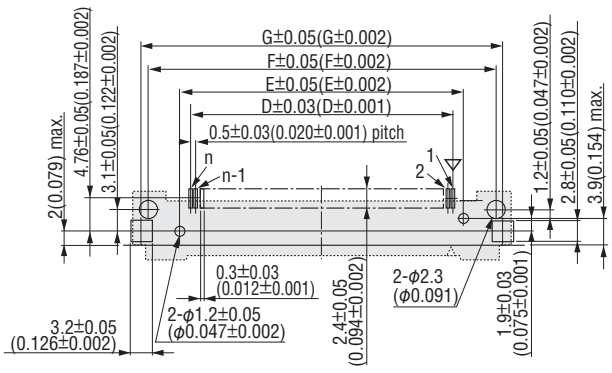

"n" is number of contacts.
▽=Polarity identification

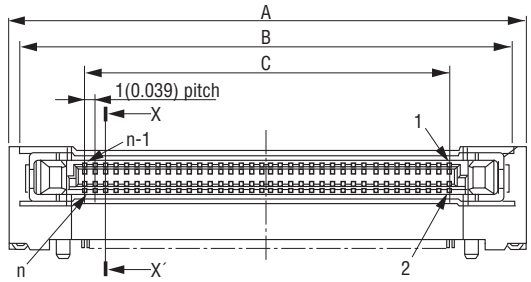

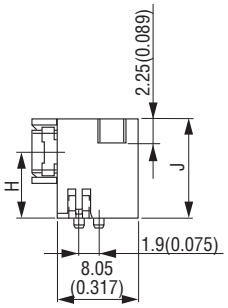

X-X′Cross Section

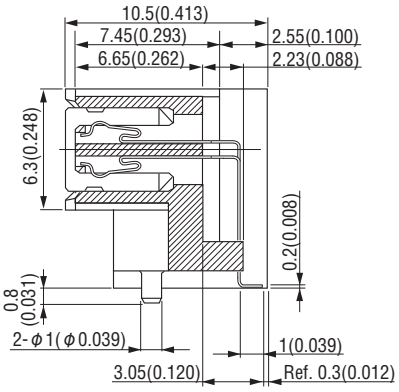

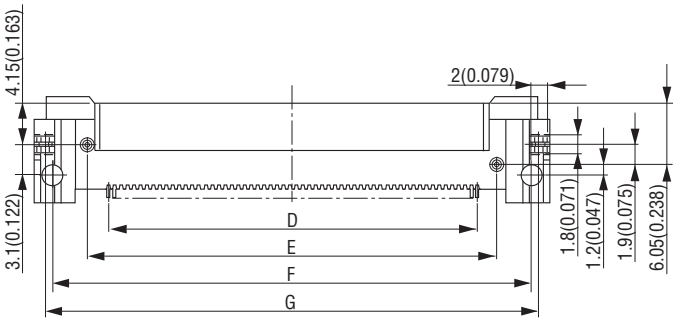

Product Table / Mating Height

Part Number	H	J
DJ33-□□□FL-T-F	4.55 (0.179)	7.70 (0.303)
DJ33-□□□FL-V-F	5.55 (0.219)	8.70 (0.343)
DJ33-□□□FL-Y-F	6.55 (0.258)	9.70 (0.382)
DJ33-□□□FL-Z-F	7.55 (0.297)	10.70 (0.421)

Packaging style
Tray

Product Table / Dimensions

No. of contacts	Part Number	A	B	C	D	E	F	G	Number of packaging
40	DJ34-040FL-□-F	34.50 (1.358)	31.20 (1.228)	19.00 (0.748)	19.50 (0.768)	23.28 (0.917)	30.36 (1.195)	31.98 (1.259)	60
50	DJ34-050FL-□-F	39.50 (1.555)	36.20 (1.425)	24.00 (0.945)	24.50 (0.965)	28.28 (1.113)	35.36 (1.392)	36.98 (1.456)	50
60	DJ34-060FL-□-F	44.50 (1.752)	41.20 (1.622)	29.00 (1.142)	29.50 (1.161)	33.28 (1.310)	40.36 (1.589)	41.98 (1.653)	50
80	DJ34-080FL-□-F	54.50 (2.146)	51.20 (2.016)	39.00 (1.535)	39.50 (1.555)	43.28 (1.704)	50.36 (1.983)	51.98 (2.046)	40

8900MS SERIES

1.27mm PITCH LOW PROFILE CONNECTOR / SMT TYPE

RoHS Compliant

FEATURES

- Highly reliable contact design with independent and synchronized spring.
- Low insertion force and withdrawal force.
- Insulator protects the contacts from damage or breakage.
- PPS insulator resists infrared soldering temperature.
- SMT retention clips reduce the stress on SMT lead pins.

ORDER CODE

8903-□□□-177 MS □-□-F

① ② ③ ④ ⑤ ⑥ ⑦

*Please order in multiples of the quantity per package.

①	【Type】 8903 : Receptacle
②	【Number of contacts】 020 : 20pin 030 : 30pin 040 : 40pin 050 : 50pin 060 : 60pin 080 : 80pin 100 : 100pin 120 : 120pin
③	【Contact name】 177
④	【Contact tail style】 MS : Straight, SMT
⑤	【Plating of contact area】 Omit : Au 0.05 μ m (Standard) D : Au 0.25 μ m(Upon request)
⑥	【Stacked height】 A : 7mm(0.276) B : 8mm(0.315)
⑦	【RoHS】 F : RoHS Compliant

If you would like semi-customized products, please contact your local KEL sales office.

ORDER CODE

8913-□□□-178 MS □-A-F

① ② ③ ④ ⑤ ⑥ ⑦

*Please order in multiples of the quantity per package.

①	【Type】 8913 : Plug
②	【Number of contacts】 020 : 20pin 030 : 30pin 040 : 40pin 050 : 50pin 060 : 60pin 080 : 80pin 100 : 100pin 120 : 120pin
③	【Contact name】 178
④	【Contact tail style】 MS : Straight, SMT
⑤	【Plating of contact area】 Omit : Au 0.05 μ m (Standard) D : Au 0.25 μ m(Upon request)
⑥	【Stacked height】】 A : 7, 8mm(0.276, 0.315)
⑦	【RoHS】 F : RoHS Compliant

If you would like semi-customized products, please contact your local KEL sales office.

SPECIFICATIONS

Material and plating	
Insulator material	Glass-filled PPS (UL94V-0),Brown
Contact material	Copper alloy
Contact plating	[8909MS] (Contact area)Gold over Nickel (Terminal area)Tin copper over Nickel [8913MS]Gold over Nickel
Retention clip material	Copper alloy
Retention clip plating	Tin copper over Nickel

Electrical Characteristics	
Current rating	0.5A per contact
Contact resistance	40mΩ max.
Dielectric withstanding voltage	650V AC for 1 minute
Insulation resistance	1,000MΩ min. at 500V DC
Operating temperature	-55°C to +85°C

Because connectors of 8900MS Series (SMT type) and 8900 Series (DIP type) may not be mated to each other, please consult with your local KEL sales office in advance.

B.C.E. S.r.l. Via Regina Pacis, 54/c - I 41049 Sassuolo (MO) Tel.: (+39) 0536 811616 - Fax.: (+39) 0536 811500 e-mail: bce@bce.it - Website: www.bce.it

8900MS Series Mating Matrix

Unit : mm(inch)

		PLUG(MALE)CONNECTORS					
		8911-□□□-178S□-A-F	8911-□□□-178S□-C-F	8913-□□□-178S□-A-F	8913-□□□-178S□-C-F	8911-□□□-178L□-F	8913-□□□-178MS□-A-F
RECEPTACLE(FEMALE)CONNECTORS	8901-□□□-177S□-A-F	Stacked Height 7(0.276)	Stacked Height 9(0.354)	Stacked Height 7(0.276)	Stacked Height 9(0.354)	Vertical Mating	Stacked Height 7(0.276)
	8901-□□□-177S□-B-F	Stacked Height 8(0.315)	Stacked Height 10(0.394)	Stacked Height 8(0.315)	Stacked Height 10(0.394)		Stacked Height 8(0.315)
	8901-□□□-177S□-D-F	Stacked Height 10(0.394)	Stacked Height 12(0.472)	Stacked Height 10(0.394)	Stacked Height 12(0.472)		Stacked Height 10(0.394)
	8903-□□□-177S□-A-F	Stacked Height 7(0.276)	Stacked Height 9(0.354)	Stacked Height 7(0.276)	Stacked Height 9(0.354)		Stacked Height 7(0.276)
	8903-□□□-177S□-B-F	Stacked Height 8(0.315)	Stacked Height 10(0.394)	Stacked Height 8(0.315)	Stacked Height 10(0.394)		Stacked Height 8(0.315)
	8903-□□□-177S□-D-F	Stacked Height 10(0.394)	Stacked Height 12(0.472)	Stacked Height 10(0.394)	Stacked Height 12(0.472)		Stacked Height 10(0.394)
	8901-□□□-177L□-F	Vertical Mating	Vertical Mating	Vertical Mating	Vertical Mating	Horizontal Mating	Vertical Mating
	8903-□□□-177MS□-A-F	No	No	Stacked Height 7(0.276)	Stacked Height 9(0.354)	No	Stacked Height 7(0.276)
	8903-□□□-177MS□-B-F	No	No	Stacked Height 8(0.315)	Stacked Height 10(0.394)	No	Stacked Height 8(0.315)

8903-□□□-177MS□-□-F (Receptacle, Straight)

Unit : mm(inch)

Printed Circuit Board Layout (Component Side View)

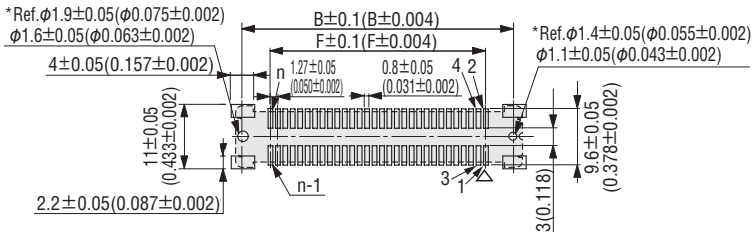

▽=Polarity identification

"n" is number of contacts.

* 1.9 and 1.4 are the recommend hole sizes when using automated placement equipment. Precision of the placement equipment should be considered.

A type

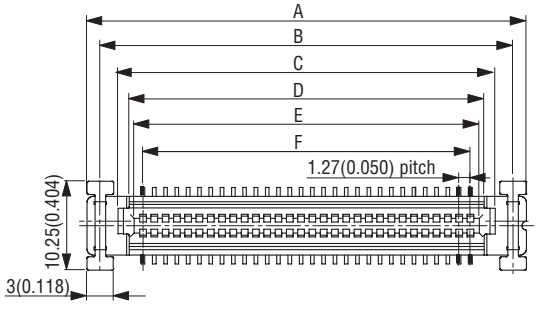

B type

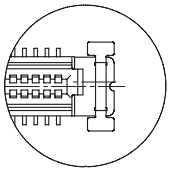

X-X′Cross Section

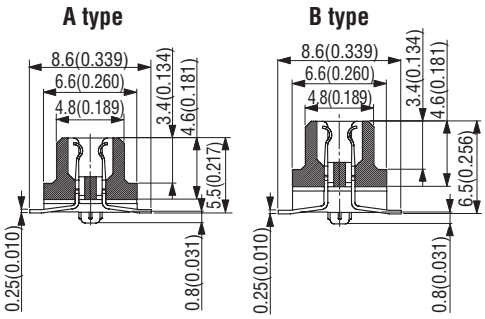

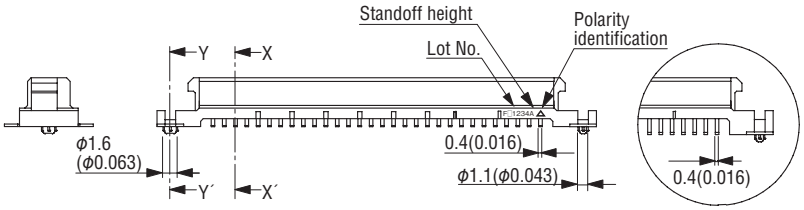

Y-Y′Cross Section

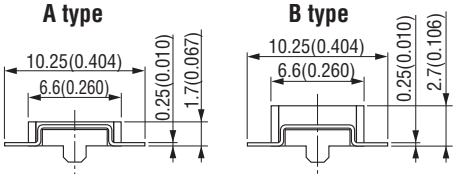

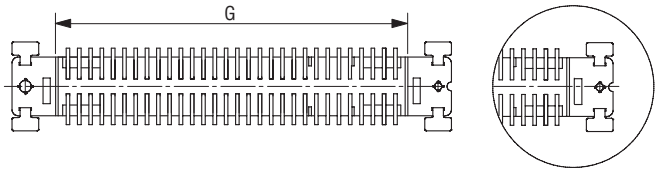

Packaging style
Pipe

Product Table / Dimensions

No. of contacts	Part Number	A	B	C	D	E	F	G	Number of packaging
20	8903-020-177MS□-□-F	24.03 (0.946)	21.03 (0.828)	17.03 (0.670)	14.23 (0.560)	13.43 (0.529)	11.43 (0.450)	14.23 (0.560)	21
30	8903-030-177MS□-□-F	30.38 (1.196)	27.38 (1.078)	23.38 (0.920)	20.58 (0.810)	19.78 (0.779)	17.78 (0.700)	20.58 (0.810)	17
40	8903-040-177MS□-□-F	36.73 (1.446)	33.73 (1.328)	29.73 (1.170)	26.93 (1.060)	26.13 (1.029)	24.13 (0.950)	26.93 (1.060)	14
50	8903-050-177MS□-□-F	43.08 (1.696)	40.08 (1.578)	36.08 (1.420)	33.28 (1.310)	32.48 (1.279)	30.48 (1.200)	33.28 (1.310)	12
60	8903-060-177MS□-□-F	49.43 (1.946)	46.43 (1.828)	42.43 (1.670)	39.63 (1.560)	38.83 (1.529)	36.83 (1.450)	39.63 (1.560)	10
80	8903-080-177MS□-□-F	62.13 (2.446)	59.13 (2.328)	55.13 (2.170)	52.33 (2.060)	51.53 (2.029)	49.53 (1.950)	52.33 (2.060)	8
100	8903-100-177MS□-□-F	74.83 (2.946)	71.83 (2.828)	67.83 (2.670)	65.03 (2.560)	64.23 (2.529)	62.23 (2.450)	65.03 (2.560)	6
120	8903-120-177MS□-□-F	87.53 (3.446)	84.53 (3.328)	80.53 (3.170)	77.73 (3.060)	76.93 (3.029)	74.93 (2.950)	77.73 (3.060)	5

8913-□□□-178MS□-A-F (Plug, Straight)

Unit : mm(inch)

Printed Circuit Board Layout (Component Side View)

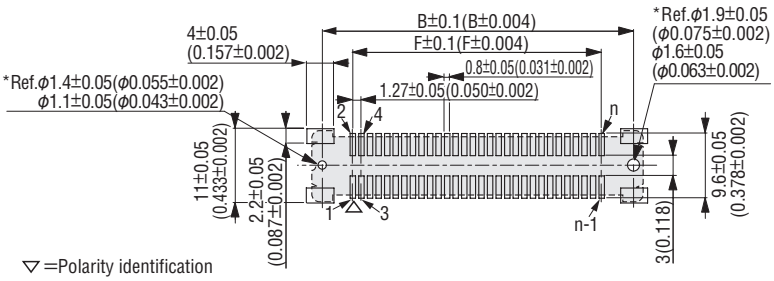

▽=Polarity identification

"n" is number of contacts.

* 1.4 and 1.9 are the recommend hole sizes when using automated placement equipment. Precision of the placement equipment should be considered.

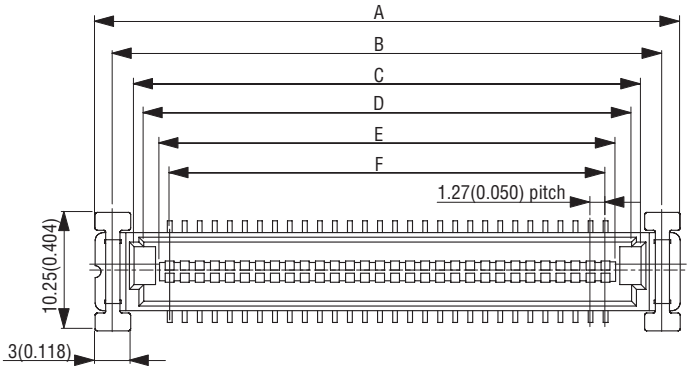

X-X′Cross Section

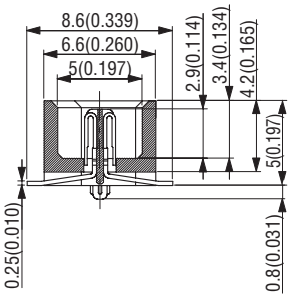

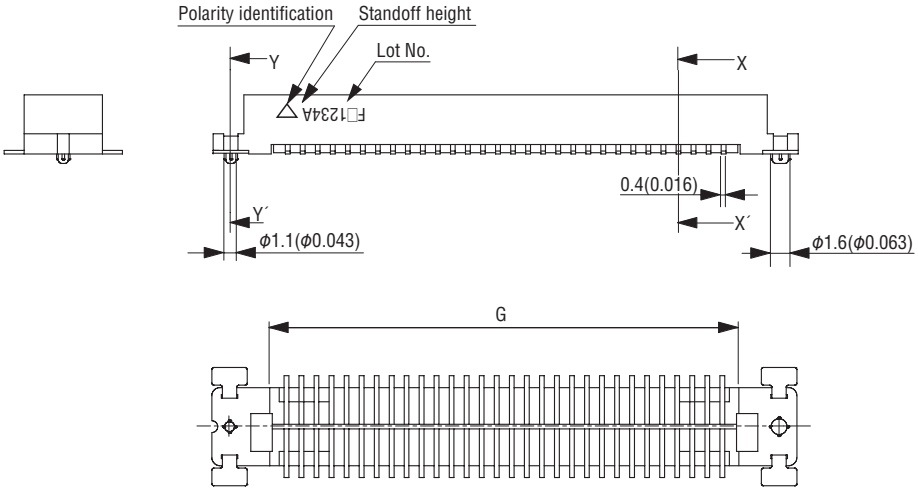

Y-Y′Cross Section

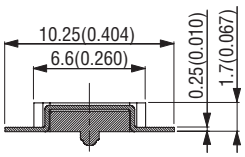

Packaging style
Pipe

Product Table / Dimensions

No. of contacts	Part Number	A	B	C	D	E	F	G	Number of packaging
20	8913-020-178MS□-A-F	24.03 (0.946)	21.03 (0.828)	17.43 (0.686)	15.83 (0.623)	13.13 (0.517)	11.43 (0.450)	14.23 (0.560)	21
30	8913-030-178MS□-A-F	30.38 (1.196)	27.38 (1.078)	23.78 (0.936)	22.18 (0.873)	19.48 (0.767)	17.78 (0.700)	20.58 (0.810)	17
40	8913-040-178MS□-A-F	36.73 (1.446)	33.73 (1.328)	30.13 (1.186)	28.53 (1.123)	25.83 (1.017)	24.13 (0.950)	26.93 (1.060)	14
50	8913-050-178MS□-A-F	43.08 (1.696)	40.08 (1.578)	36.48 (1.436)	34.88 (1.373)	32.18 (1.267)	30.48 (1.200)	33.28 (1.310)	12
60	8913-060-178MS□-A-F	49.43 (1.946)	46.43 (1.828)	42.83 (1.686)	41.23 (1.623)	38.53 (1.517)	36.83 (1.450)	39.63 (1.560)	10
80	8913-080-178MS□-A-F	62.13 (2.446)	59.13 (2.328)	55.53 (2.186)	53.93 (2.123)	51.23 (2.017)	49.53 (1.950)	52.33 (2.060)	8
100	8913-100-178MS□-A-F	74.83 (2.946)	71.83 (2.828)	68.23 (2.686)	66.63 (2.623)	63.93 (2.517)	62.23 (2.450)	65.03 (2.560)	6
120	8913-120-178MS□-A-F	87.53 (3.446)	84.53 (3.328)	80.93 (3.186)	79.33 (3.123)	76.63 (3.017)	74.93 (2.950)	77.73 (3.060)	5

8900 SERIES

1.27mm PITCH LOW PROFILE CONNECTORS

RoHS Compliant

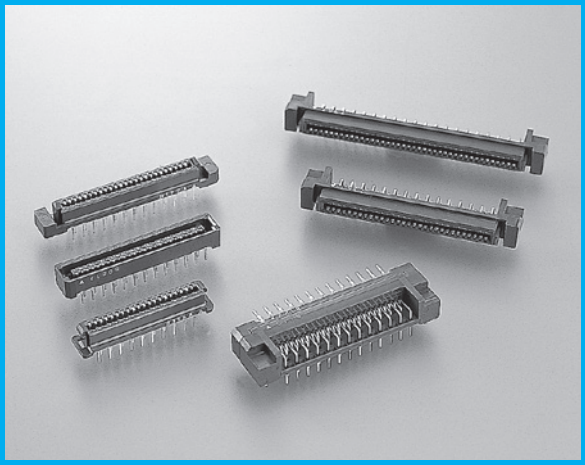

FEATURES

- Highly reliable contact design with independent and synchronized spring.
- Low insertion and withdrawal force.
- With a guide mechanism, smooth mating can be achieved.
- Insulator protects the contacts from damage or breakage.
- PPS insulator offers high temperature resistance.
- Stacked mating heights of 7, 8, 9, 10 and 12mm. (0.276, 0.315, 0.354, 0.394 and 0.472´´)
- Wide variations in the number of contacts (20, 30, 40, 50, 60, 80, 100 and 120 pins) are available.
- Audible "click"assures users of complete mating.
- Two types, with and without a flange, are available.
- 3 rows of terminals conserve board space.(Right angle type)

ORDER CODE

890□-□□□-177□□-□-F

① ② ③ ④ ⑤ ⑥ ⑦

*Please order in multiples of the quantity per package.

① 【Type】 Receptacle **8901 :** With flanges and hooks **8903 :** Without flanges and hooks

② 【Number of contacts】 **020 :** 20pin **030 :** 30pin **040 :** 40pin **050 :** 50pin **060 :** 60pin **080 :** 80pin **100 :** 100pin **120 :** 120pin

③ 【Contact name】 **177**

④ 【Contact tail style】 **S :** Straight **L :** Right angle (with flanges only)

⑤ 【Plating of contact area】 **Omit :** Au 0.05 μ m (Standard) **D :** Au 0.25 μ m(Upon request)

⑥ 【Stacked height】 (S type) **A :** 7, 9mm(0.276, 0.354'') **B :** 8, 10mm(0.315, 0.394'') **D :** 10, 12mm(0.394, 0.472'')

⑦ 【RoHS】 **F :** RoHS Compliant

*If you would like semi-customized products, please contact your local KEL sales office. *About 10mm mating height combinations, please refer next page.

ORDER CODE

891□-□□□-178□□-□-F

① ② ③ ④ ⑤ ⑥ ⑦

*Please order in multiples of the quantity per package.

① 【Type】 Plug **8911 :** With flanges and hooks **8913 :** Without flanges and hooks

② 【Number of contacts】 **020 :** 20pin **030 :** 30pin **040 :** 40pin **050 :** 50pin **060 :** 60pin **080 :** 80pin **100 :** 100pin **120 :** 120pin

③ 【Contact name】 **178**

④ 【Contact tail style】 **S :** Straight **L :** Right angle (with flanges only)

⑤ 【Plating of contact area】 **Omit :** Au 0.05 μ m (Standard) **D :** Au 0.25 μ m(Upon request)

⑥ 【Stacked height】 (S type) **A :** 7, 8, 10mm(0.276, 0.315, 0.394'') **C :** 9, 10, 12mm(0.354, 0.394, 0.472'')

⑦ 【RoHS】 **F :** RoHS Compliant

*If you would like semi-customized products, please contact your local KEL sales office. *About 10mm mating height combinations, please refer next page.

SPECIFICATIONS

Material and plating		Electrical Characteristics	
Insulator material	Glass-filled PPS (UL94V-0),Brown	Current rating	0.5A per contact
Alignment plate material	Glass-filled Nylon 66 (UL 94V-0), Brown	Contact resistance	40mΩ max.
Contact material	Copper alloy	Dielectric withstanding voltage	650V AC for 1 minute
Contact plating	[890□] (Contact area) Gold over Nickel (Terminal area) Tin copper over Nickel [891□] Gold over Nickel	Insulation resistance	1,000MΩ min. at 500V DC
		Insertion force (Typical example)	18.62N max./ 20 pin, 37.24N max./ 40 pin, 55.86N max./ 60 pin, 93.10N max./ 100 pin
		Withdrawal force (Typical example)	2.94N min./ 20 pin, 5.88N min./ 40 pin, 8.82N min./ 60 pin, 14.70N min./ 100 pin
Retention clip material	Copper alloy		
Retention clip plating	Tin copper over Nickel	Operating temperature	-55°C to +85°C

Mating Drawing

Unit : mm(inch)

◆Horizontal Mating

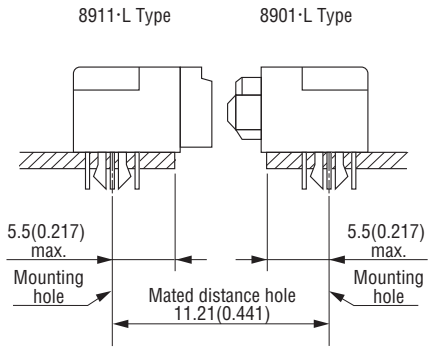

◆Vertical Mating

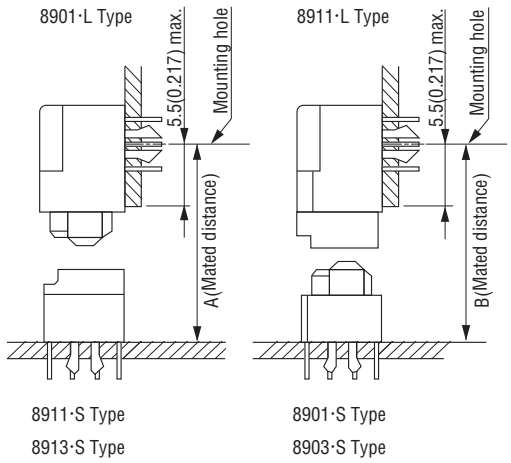

8911 8913	A
S-A	9.105 (0.359)
S-C	11.105 (0.437)

8901 8903	B
S-A	9.105 (0.359)
S-B	10.105 (0.398)
S-D	12.105 (0.477)

◆Stacked Mating

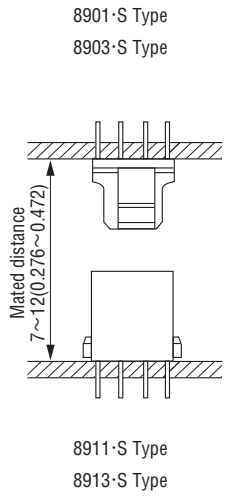

Additional mating combinations shown below.

8900 Series Stacked Mating Combinations

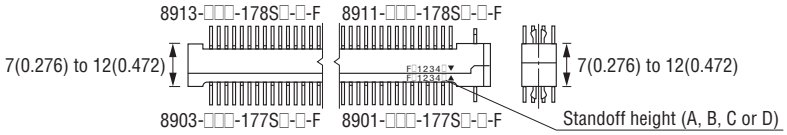

89□1series
with flanges and hooks

89□3series
without flanges and hooks

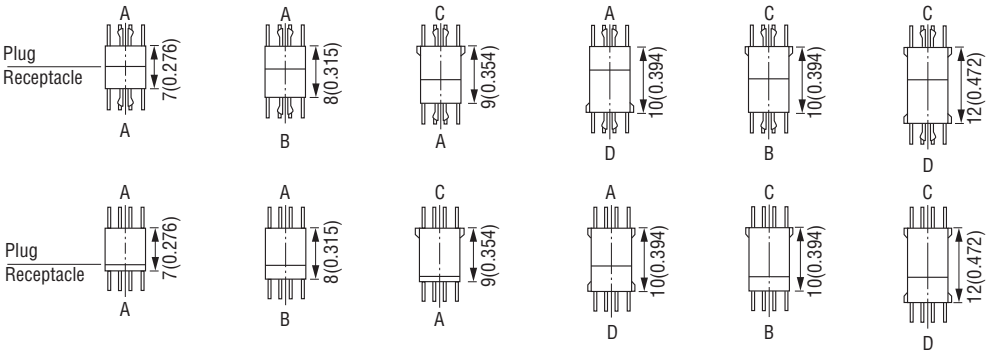

◆Selection Guide

Type	7mm (0.276inch)	8mm(0.315inch)	9mm(0.354inch)	10mm(0.394inch)	12mm(0.472inch)
With flanges and hooks	8911-□□□-178S□-A-F 8901-□□□-177S□-A-F	8911-□□□-178S□-A-F 8901-□□□-177S□-B-F	8911-□□□-178S□-C-F 8901-□□□-177S□-A-F	8911-□□□-178S□-A-F 8901-□□□-177S□-D-F 8911-□□□-178S□-C-F 8901-□□□-177S□-B-F	8911-□□□-178S□-C-F 8901-□□□-177S□-D-F
Without flanges and hooks	8913-□□□-178S□-A-F 8903-□□□-177S□-A-F	8913-□□□-178S□-A-F 8903-□□□-177S□-B-F	8913-□□□-178S□-C-F 8903-□□□-177S□-A-F	8913-□□□-178S□-A-F 8903-□□□-177S□-D-F 8913-□□□-178S□-C-F 8903-□□□-177S□-B-F	8913-□□□-178S□-C-F 8903-□□□-177S□-D-F

8901-□□□-177S□-□-F (Receptacle, With flanges and hooks, Straight)

Unit : mm(inch)

Printed Circuit Board Layout (Component Side View)

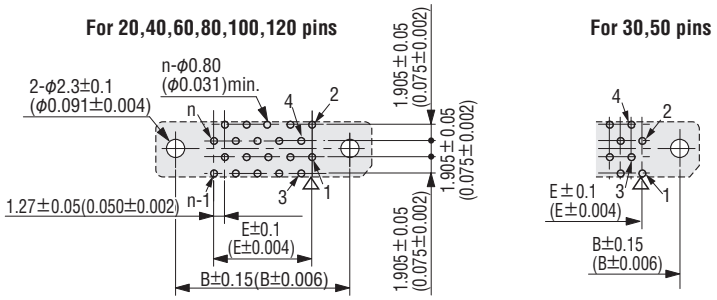

Recommended PCB Thickness t=1.6±0.19 (0.063±0.007)

▽ = Polarity identification "n" is number of contacts.

A, B type

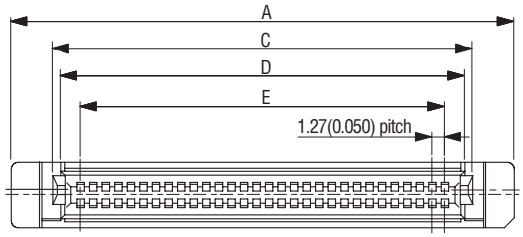

D type

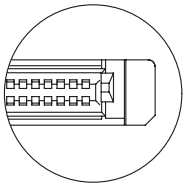

X-X′ Cross Section

A, B type

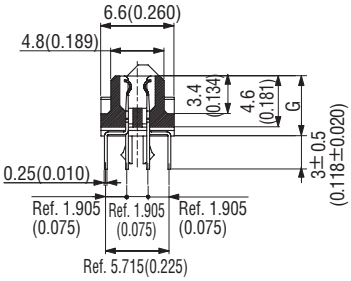

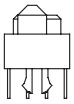

A type

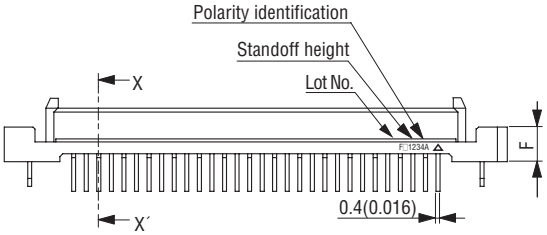

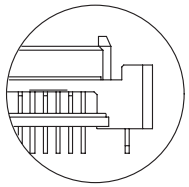

D type

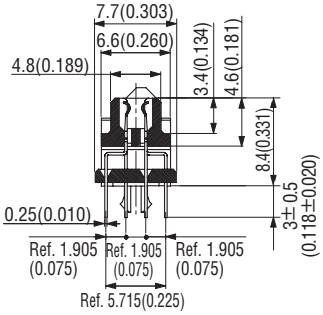

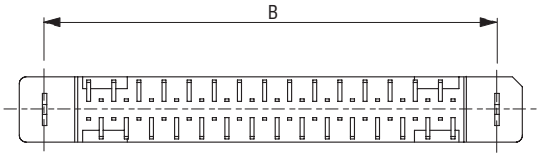

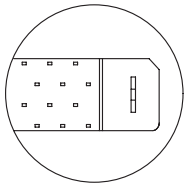

Packaging style
Pipe

Product Table / Dimensions

No. of contacts	Part Number	A	B	C	D	E	Number of packaging
20	8901-020-177S□-□-F	25.43 (1.001)	20.32 (0.800)	17.03 (0.670)	15.43 (0.607)	11.43 (0.450)	20
30	8901-030-177S□-□-F	31.78 (1.251)	26.67 (1.050)	23.38 (0.920)	21.78 (0.857)	17.78 (0.700)	16
40	8901-040-177S□-□-F	38.13 (1.501)	33.02 (1.300)	29.73 (1.170)	28.13 (1.107)	24.13 (0.950)	13
50	8901-050-177S□-□-F	44.48 (1.751)	39.37 (1.550)	36.08 (1.420)	34.48 (1.357)	30.48 (1.200)	11
60	8901-060-177S□-□-F	50.83 (2.001)	45.72 (1.800)	42.43 (1.670)	40.83 (1.607)	36.83 (1.450)	10
80	8901-080-177S□-□-F	63.53 (2.501)	58.42 (2.300)	55.13 (2.170)	53.53 (2.107)	49.53 (1.950)	7
100	8901-100-177S□-□-F	76.23 (3.001)	71.12 (2.800)	67.83 (2.670)	66.23 (2.607)	62.23 (2.450)	6
120	8901-120-177S□-□-F	88.93 (3.501)	83.82 (3.300)	80.53 (3.170)	78.93 (3.107)	74.93 (2.950)	5

Type	F	G
—A	3.5 (0.138)	5.4 (0.213)
—B	4.5 (0.177)	6.4 (0.252)
—D	6.5 (0.256)	—

8903-□□□-177S□-□-F (Receptacle, Without flanges and hooks, Straight)

Unit : mm(inch)

Printed Circuit Board Layout (Component Side View)

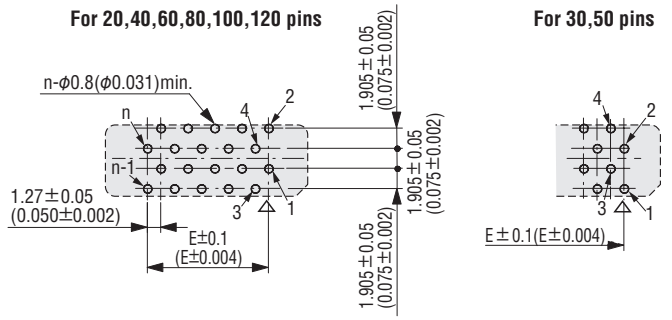

Recommended PCB Thickness t=1.6±0.19 (0.063±0.007)

▽=Polarity identification "n" is number of contacts.

A, B type

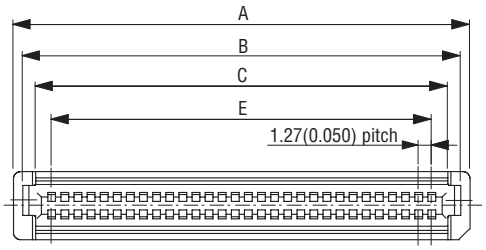

A type

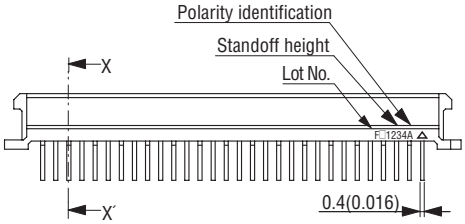

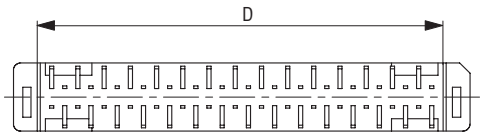

D type

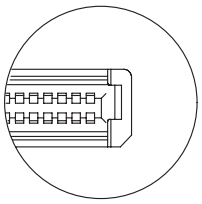

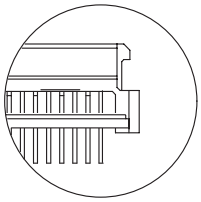

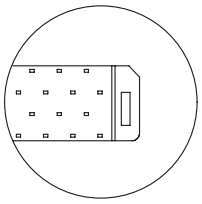

X-X′Cross Section

A, B type

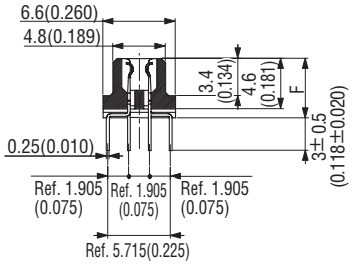

D type

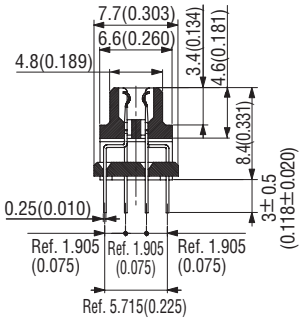

Packaging style
Pipe

Product Table / Dimensions

No. of contacts	Part Number	A	B	C	D	E	Number of packaging
20	8903-020-177S□-□-F	18.83 (0.741)	17.03 (0.670)	14.53 (0.572)	13.43 (0.529)	11.43 (0.450)	27
30	8903-030-177S□-□-F	25.18 (0.991)	23.38 (0.920)	20.88 (0.822)	19.78 (0.779)	17.78 (0.700)	20
40	8903-040-177S□-□-F	31.53 (1.241)	29.73 (1.170)	27.23 (1.072)	26.13 (1.029)	24.13 (0.950)	16
50	8903-050-177S□-□-F	37.88 (1.491)	36.08 (1.420)	33.58 (1.322)	32.48 (1.279)	30.48 (1.200)	13
60	8903-060-177S□-□-F	44.23 (1.741)	42.43 (1.670)	39.93 (1.572)	38.83 (1.529)	36.83 (1.450)	11
80	8903-080-177S□-□-F	56.93 (2.241)	55.13 (2.170)	52.63 (2.072)	51.53 (2.029)	49.53 (1.950)	8
100	8903-100-177S□-□-F	69.63 (2.741)	67.83 (2.670)	65.33 (2.572)	64.23 (2.529)	62.23 (2.450)	7
120	8903-120-177S□-□-F	82.33 (3.241)	80.53 (3.170)	78.03 (3.072)	76.93 (3.029)	74.93 (2.950)	6

Type	F
—A	5.4 (0.213)
—B	6.4 (0.252)

8901-□□□-177L□-F (Receptacle, With flanges and hooks, Right angle)

Unit : mm(inch)

Printed Circuit Board Layout (Component Side View)

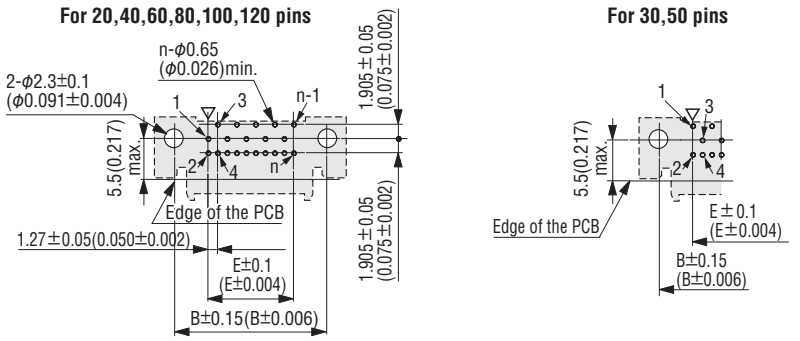

Recommended PCB Thickness t=1.6±0.19 (0.063±0.007) ▽=Polarity identification "n" is number of contacts.

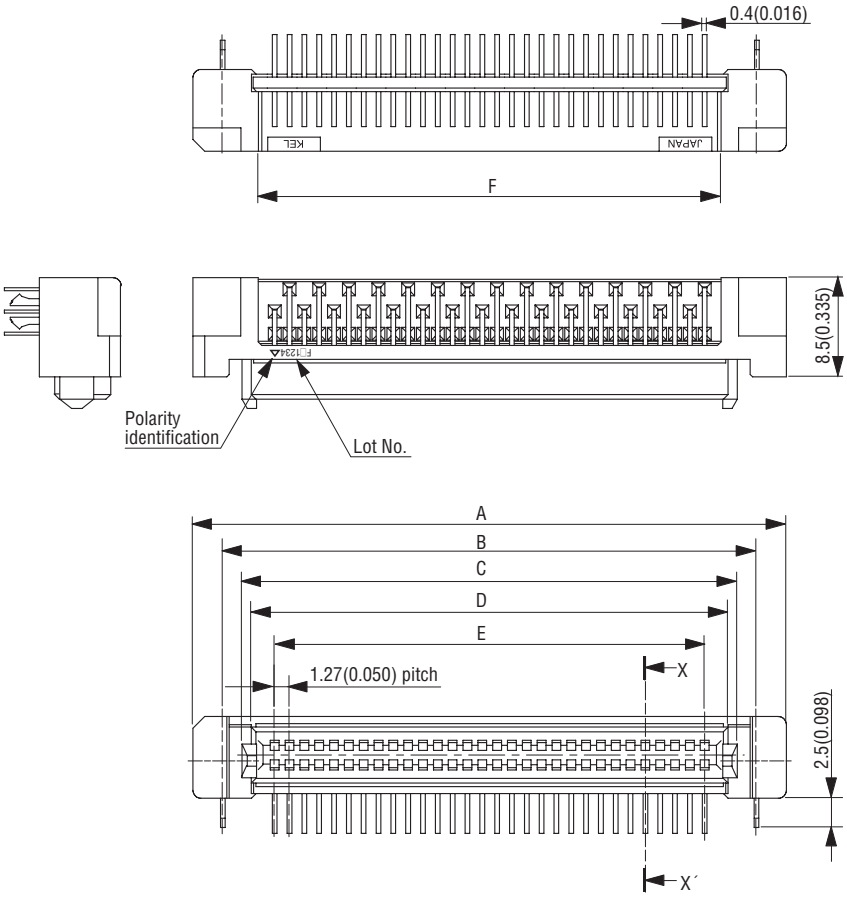

X-X′Cross Section

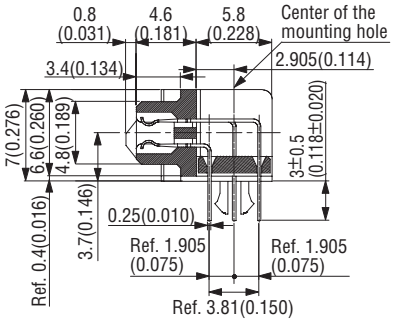

Packaging style
Pipe

Product Table / Dimensions

No. of contacts	Part Number	A	B	C	D	E	F	Number of packaging
20	8901-020-177L□-F	25.43 (1.001)	20.32 (0.800)	17.03 (0.670)	15.43 (0.607)	11.43 (0.450)	14.23 (0.560)	20
30	8901-030-177L□-F	31.78 (1.251)	26.67 (1.050)	23.38 (0.920)	21.78 (0.857)	17.78 (0.700)	20.58 (0.810)	16
40	8901-040-177L□-F	38.13 (1.501)	33.02 (1.300)	29.73 (1.170)	28.13 (1.107)	24.13 (0.950)	26.93 (1.060)	13
50	8901-050-177L□-F	44.48 (1.751)	39.37 (1.550)	36.08 (1.420)	34.48 (1.357)	30.48 (1.200)	33.28 (1.310)	11
60	8901-060-177L□-F	50.83 (2.001)	45.72 (1.800)	42.43 (1.670)	40.83 (1.607)	36.83 (1.450)	39.63 (1.560)	10
80	8901-080-177L□-F	63.53 (2.501)	58.42 (2.300)	55.13 (2.170)	53.53 (2.107)	49.53 (1.950)	52.33 (2.060)	8
100	8901-100-177L□-F	76.23 (3.001)	71.12 (2.800)	67.83 (2.670)	66.23 (2.607)	62.23 (2.450)	65.03 (2.560)	6
120	8901-120-177L□-F	88.93 (3.501)	83.82 (3.300)	80.53 (3.170)	78.93 (3.107)	74.93 (2.950)	77.73 (3.060)	5

8911-□□□-178S□-□-F (Plug, With flanges and hooks, Straight)

Unit : mm(inch)

Printed Circuit Board Layout (Component Side View)

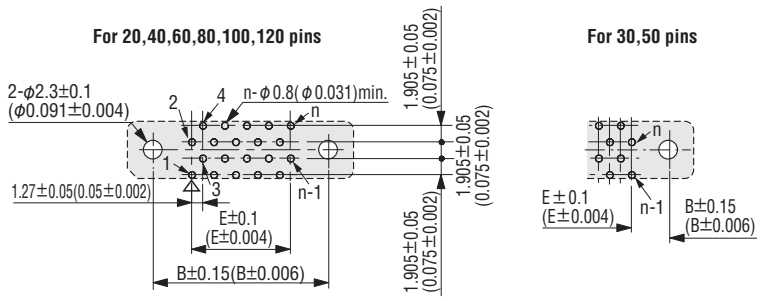

Recommended PCB Thickness t=1.6±0.19 (0.063±0.007) ▽=Polarity identification "n" is number of contacts.

A type

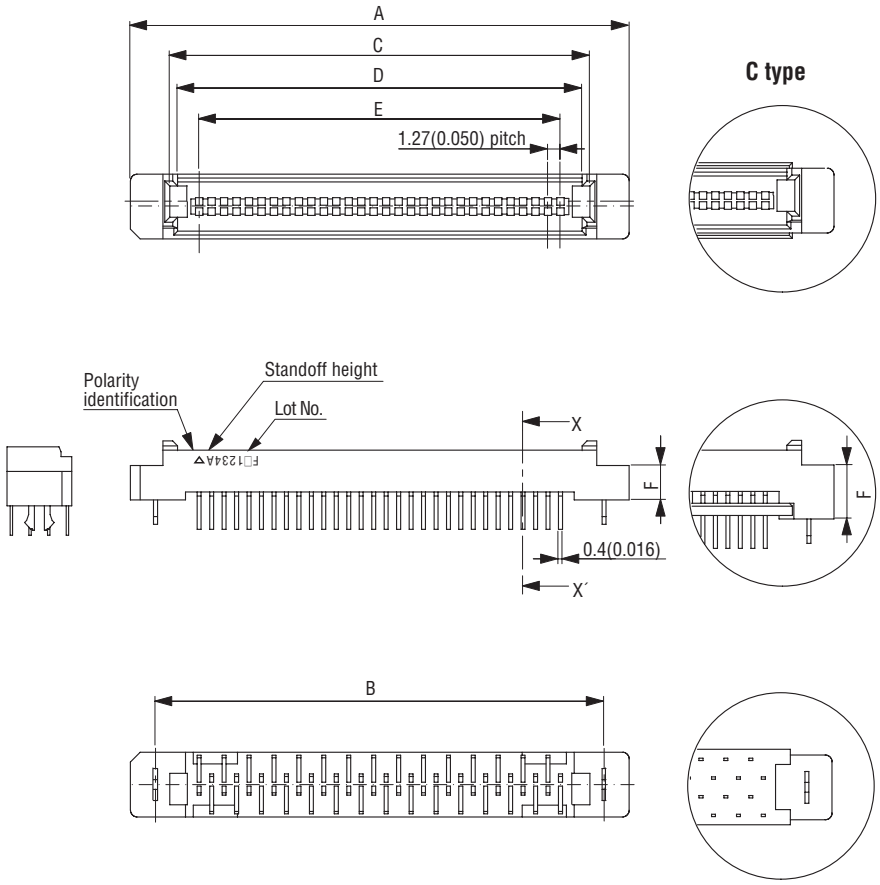

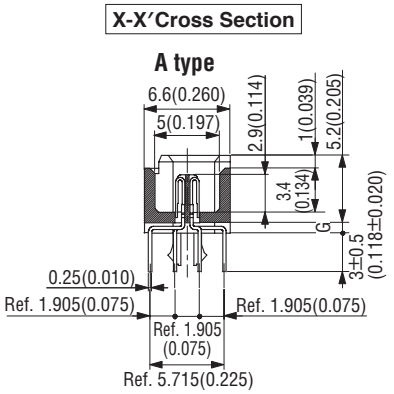

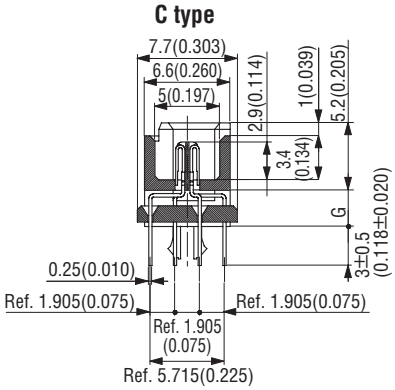

Packaging style
Pipe

Product Table / Dimensions

No. of contacts	Part Number	A	B	C	D	E	Number of packaging
20	8911-020-178S□-□-F	25.43 (1.001)	20.32 (0.800)	17.43 (0.686)	15.83 (0.623)	11.43 (0.450)	20
30	8911-030-178S□-□-F	31.78 (1.251)	26.67 (1.050)	23.78 (0.936)	22.18 (0.873)	17.78 (0.700)	16
40	8911-040-178S□-□-F	38.13 (1.501)	33.02 (1.300)	30.13 (1.186)	28.53 (1.123)	24.13 (0.950)	13
50	8911-050-178S□-□-F	44.48 (1.751)	39.37 (1.550)	36.48 (1.436)	34.88 (1.373)	30.48 (1.200)	11
60	8911-060-178S□-□-F	50.83 (2.001)	45.72 (1.800)	42.83 (1.686)	41.23 (1.623)	36.83 (1.450)	10
80	8911-080-178S□-□-F	63.53 (2.501)	58.42 (2.300)	55.53 (2.186)	53.93 (2.123)	49.53 (1.950)	7
100	8911-100-178S□-□-F	76.23 (3.001)	71.12 (2.800)	68.23 (2.686)	66.63 (2.623)	62.23 (2.450)	6
120	8911-120-178S□-□-F	88.93 (3.501)	83.82 (3.300)	80.93 (3.186)	79.33 (3.123)	74.93 (2.950)	5

Type	F	G
—A	3.5 (0.138)	0.8 (0.031)
—C	5.5 (0.217)	2.8 (0.110)

8913-□□□-178S□-□-F (Plug, Without flanges and hooks, Straight)

Unit : mm(inch)

Printed Circuit Board Layout (Component Side View)

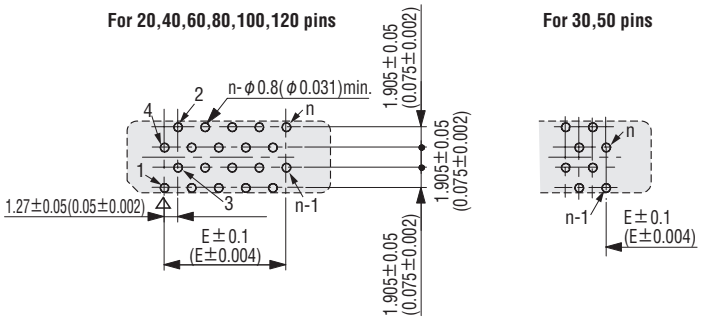

Recommended PCB Thickness t=1.6±0.19 (0.063±0.007)

▽=Polarity identification "n" is number of contacts.

A type

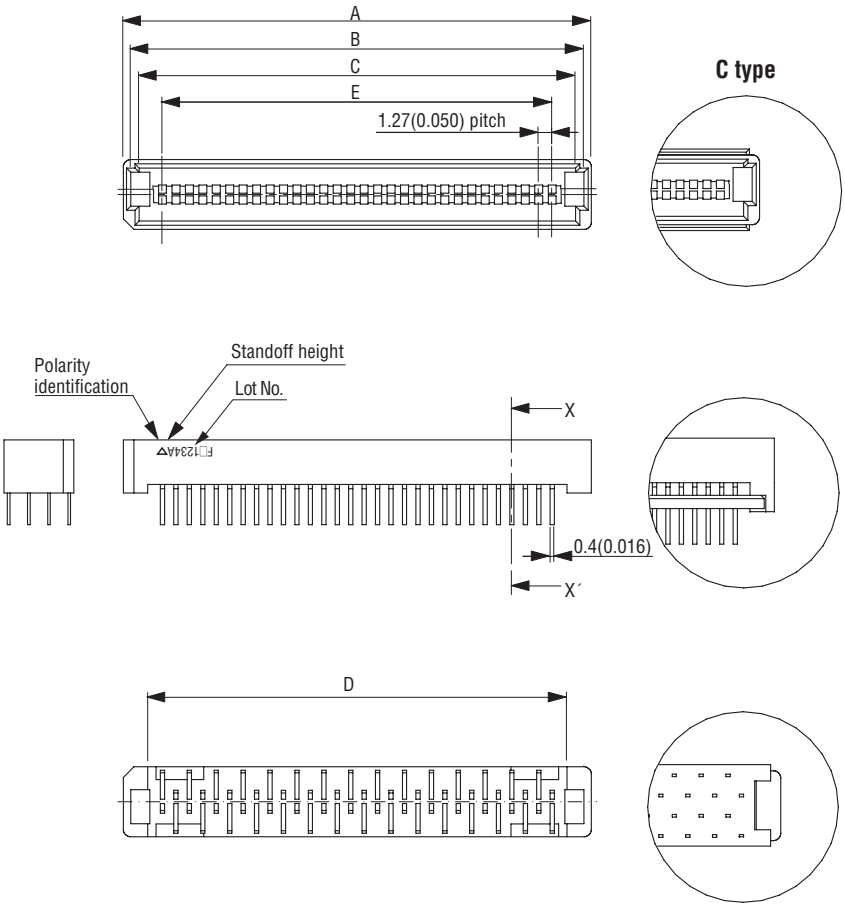

X-X′Cross Section

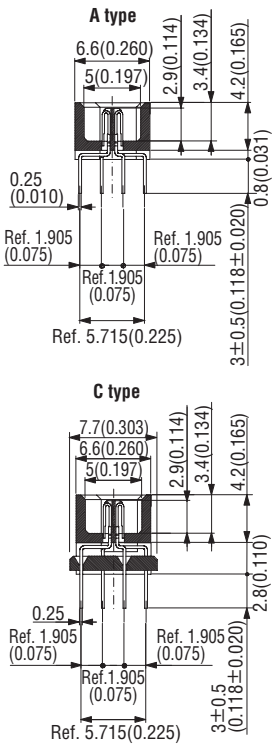

Packaging style
Pipe

Product Table / Dimensions

No. of contacts	Part Number	A	B	C	D	E	Number of packaging
20	8913-020-178S□-□-F	18.83 (0.741)	17.43 (0.686)	15.83 (0.623)	14.23 (0.560)	11.43 (0.450)	27
30	8913-030-178S□-□-F	25.18 (0.991)	23.78 (0.936)	22.18 (0.873)	20.58 (0.810)	17.78 (0.700)	20
40	8913-040-178S□-□-F	31.53 (1.241)	30.13 (1.186)	28.53 (1.123)	26.93 (1.060)	24.13 (0.950)	16
50	8913-050-178S□-□-F	37.88 (1.491)	36.48 (1.436)	34.88 (1.373)	33.28 (1.310)	30.48 (1.200)	13
60	8913-060-178S□-□-F	44.23 (1.741)	42.83 (1.686)	41.23 (1.623)	39.63 (1.560)	36.83 (1.450)	11
80	8913-080-178S□-□-F	56.93 (2.241)	55.53 (2.186)	53.93 (2.123)	52.33 (2.060)	49.53 (1.950)	8
100	8913-100-178S□-□-F	69.63 (2.741)	68.23 (2.686)	66.63 (2.623)	65.03 (2.560)	62.23 (2.450)	7
120	8913-120-178S□-□-F	82.33 (3.241)	80.93 (3.186)	79.33 (3.123)	77.73 (3.060)	74.93 (2.950)	6

B.C.E. S.r.l. Via Regina Pacis, 54/c - I 41049 Sassuolo (MO) Tel.: (+39) 0536 811616 - Fax.: (+39) 0536 811500 e-mail: bce@bce.it - Website: www.bce.it

8911-□□□-178L□-F (Plug, With flanges and hooks, Right angle)

Unit : mm(inch)

Printed Circuit Board Layout (Component Side View)

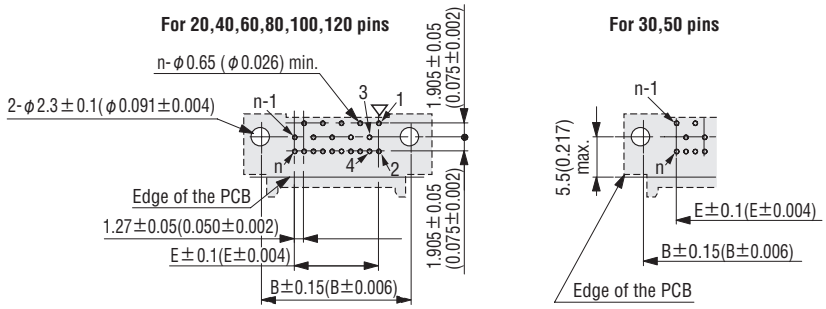

Recommended PCB Thickness t=1.6±0.19 (0.063±0.007) ▽=Polarity identification "n" is number of contacts.

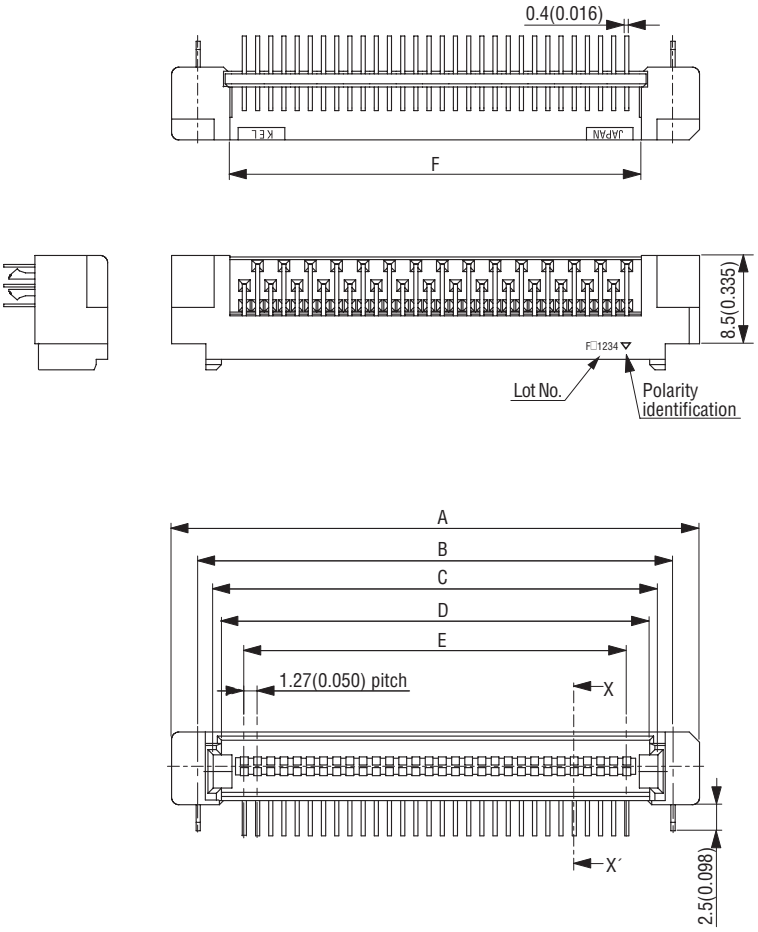

X-X′Cross Section

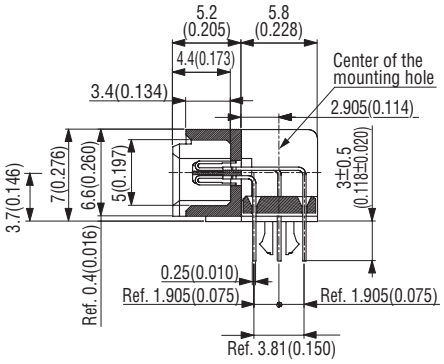

Packaging style
Pipe

Product Table / Dimensions

No. of contacts	Part Number	A	B	C	D	E	F	Number of packaging
20	8911-020-178L□-F	25.43 (1.001)	20.32 (0.800)	17.43 (0.686)	15.83 (0.623)	11.43 (0.450)	14.23 (0.560)	20
30	8911-030-178L□-F	31.78 (1.251)	26.67 (1.050)	23.78 (0.936)	22.18 (0.873)	17.78 (0.700)	20.58 (0.810)	16
40	8911-040-178L□-F	38.13 (1.501)	33.02 (1.300)	30.13 (1.186)	28.53 (1.123)	24.13 (0.950)	26.93 (1.060)	13
50	8911-050-178L□-F	44.48 (1.751)	39.37 (1.550)	36.48 (1.436)	34.88 (1.373)	30.48 (1.200)	33.28 (1.310)	11
60	8911-060-178L□-F	50.83 (2.001)	45.72 (1.800)	42.83 (1.686)	41.23 (1.623)	36.83 (1.450)	39.63 (1.560)	10
80	8911-080-178L□-F	63.53 (2.501)	58.42 (2.300)	55.53 (2.186)	53.93 (2.123)	49.53 (1.950)	52.33 (2.060)	8
100	8911-100-178L□-F	76.23 (3.001)	71.12 (2.800)	68.23 (2.686)	66.63 (2.623)	62.23 (2.450)	65.03 (2.560)	6
120	8911-120-178L□-F	88.93 (3.501)	83.82 (3.300)	80.93 (3.186)	79.33 (3.123)	74.93 (2.950)	77.73 (3.060)	5

8903N-FS SERIES

1.27mm PITCH LOW PROFILE CONNECTOR / FLEXIBLE STRAIGHT TYPE

RoHS Compliant

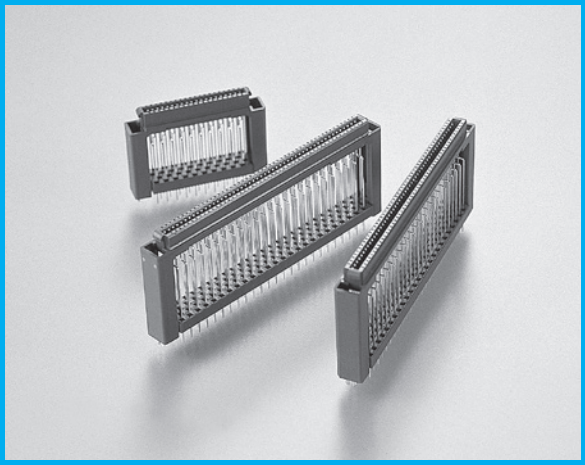

FEATURES

- Standard stacked heights are 20, 22, 24, 26, and 30mm(0.787", 0.866", 0.945", 1.024", 1.102", 1.181").
- Other stacked heights from 20mm (0.787´´) to 32mm(1.260´´) are available.
- 8903N-FS series will mate with 8913/8930E/8931E series.
- Highly reliable contact design with independent and synchronized spring.
- Low insertion force and withdrawal force.
- Insulator protects the contacts from damage or breakage.
- Wide variations in the number of contacts (40, 50, 60, 68, 80, and 100 pins) are offered.
- Audible "click" assures users of complete mating.

ORDER CODE

8903N - □□□ FS □ - □ - F

① ② ③ ④ ⑤ ⑥

*Please order in multiples of the quantity per package.

①	【Type】 8903N : Receptacle
②	【Number of contacts】 040 : 40pin 050 : 50pin 060 : 60pin 068 : 68pin 080 : 80pin 100 : 100pin
③	【Contact tail style】 FS : Flexible Straight
④	【Plating of contact area】 Omit : Au 0.05 μ m (Standard) D : Au 0.25 μ m(Upon request)
⑤	【Stacked height】 T : 20mm(0.787") U : 22mm(0.866") V : 24mm(0.945") W : 26mm(1.024") Y : 28mm(1.102") Z : 30mm(1.181")
⑥	【RoHS】 F : RoHS Compliant

If you would like semi-customized products, please contact your local KEL sales office.

SPECIFICATIONS

Material and plating	
Insulator material	Glass-filled PBT (UL94V-0),Brown
Contact material	Copper alloy
Contact plating	(Contact area) Gold over Nickel (Terminal area) Tin copper over Nickel
Retention clip material	Copper alloy
Retention clip plating	Tin copper over Nickel

Electrical Characteristics	
Current rating	0.5A per contact
Contact resistance	40mΩ max.
Dielectric withstanding voltage	650V AC for 1 minute
Insulation resistance	1,000MΩ min. at 500V DC
Operating temperature	-55°C to +85°C

8903N-FS Series Stacked Mating Matrix

Order Code	8903N-□□□FS□-T-F	8903N-□□□FS□-U-F	8903N-□□□FS□-V-F	8903N-□□□FS□-W-F	8903N-□□□FS□-Y-F	8903N-□□□FS□-Z-F
8913-□□□-178S□-A-F	20 (0.787)	22 (0.866)	24(0.945)	26(1.024)	28(1.102)	30(1.181)
8913-□□□-178S□-C-F	22 (0.866)	24(0.945)	26(1.024)	28(1.102)	30(1.181)	32(1.260)
8913-□□□-178MS□-A-F	20 (0.787)	22 (0.866)	24(0.945)	26(1.024)	28(1.102)	30(1.181)
8930E-□□□-178MS-F	20.1 (0.791)	22.1 (0.870)	24.1(0.949)	26.1(1.028)	28.1(1.106)	30.1(1.185)
8931E-□□□-178S-F	20 (0.787)	22 (0.866)	24(0.945)	26(1.024)	28(1.102)	30(1.181)

8903N-□□□FS□-□-F (Receptacle, Flexible straight)

Unit : mm(inch)

Printed Circuit Board Layout (Component Side View)

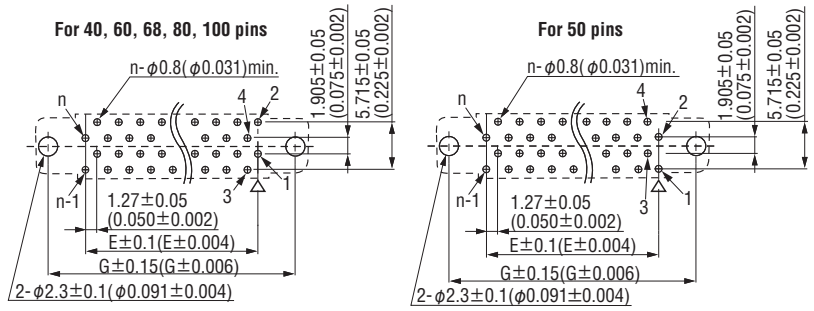

Recommended PCB Thickness $t=1.6^{+0.2}_{-0.1}$ $(0.063^{+0.008}_{-0.004})$ ▽=Polarity identification
"n" is number of contacts.

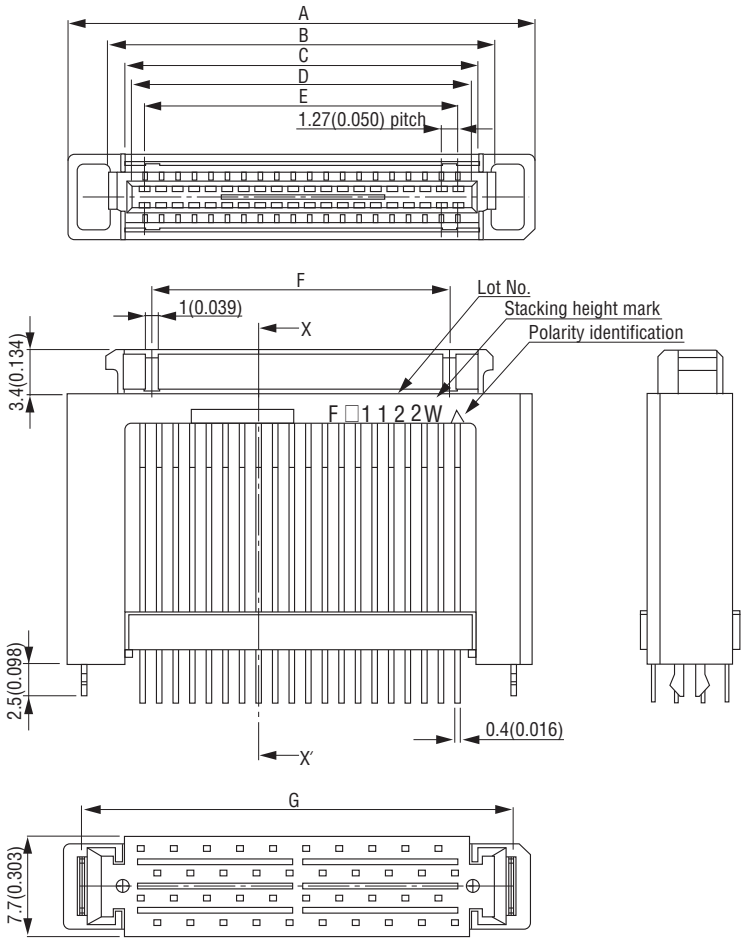

X-X′Cross Section

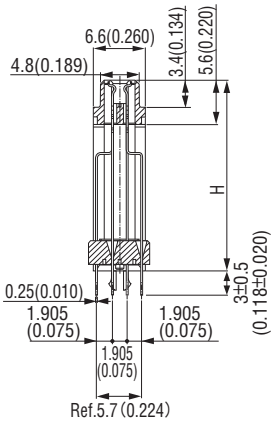

Product Table / Connector Height

Part Number	Stacked height	H
8903N-□□□FS□-T-F	20 (0.787)	18.4 (0.724)
8903N-□□□FS□-U-F	22 (0.866)	20.4 (0.803)
8903N-□□□FS□-V-F	24 (0.945)	22.4 (0.882)
8903N-□□□FS□-W-F	26 (1.024)	24.4 (0.961)
8903N-□□□FS□-Y-F	28 (1.102)	26.4 (1.039)
8903N-□□□FS□-Z-F	30 (1.181)	28.4 (1.118)

Packaging style
Pipe

Product Table / Dimensions

No. of contacts	Part Number	A	B	C	D	E	F	G	Number of packaging
40	8903N-040FS□-□-F	35.90 (1.413)	29.73 (1.170)	27.23 (1.072)	26.13 (1.029)	24.13 (0.950)	22.86 (0.900)	33.02 (1.300)	13
50	8903N-050FS□-□-F	42.25 (1.663)	36.08 (1.420)	33.58 (1.322)	32.48 (1.279)	30.48 (1.200)	29.21 (1.150)	39.37 (1.550)	11
60	8903N-060FS□-□-F	48.60 (1.913)	42.43 (1.670)	39.93 (1.572)	38.83 (1.529)	36.83 (1.450)	35.56 (1.400)	45.72 (1.800)	10
68	8903N-068FS□-□-F	53.68 (2.113)	47.51 (1.870)	45.01 (1.772)	43.91 (1.729)	41.91 (1.650)	40.64 (1.600)	50.80 (2.000)	9
80	8903N-080FS□-□-F	61.30 (2.413)	55.13 (2.170)	52.63 (2.072)	51.53 (2.029)	49.53 (1.950)	48.26 (1.900)	58.42 (2.300)	8
100	8903N-100FS□-□-F	74.00 (2.913)	67.83 (2.670)	65.33 (2.572)	64.23 (2.529)	62.23 (2.450)	60.96 (2.400)	71.12 (2.800)	6

8800 SERIES

1.27mm PITCH CONNECTOR

RoHS Compliant

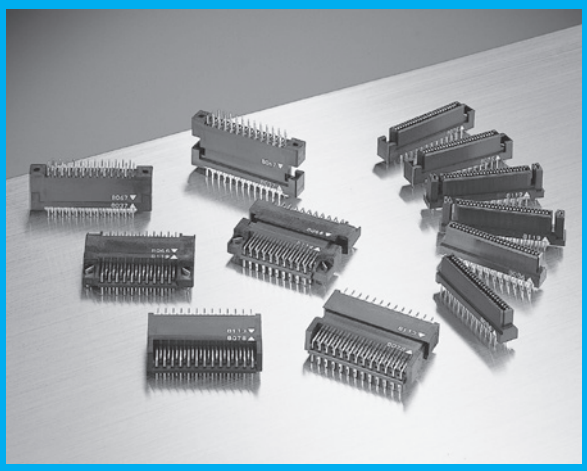

FEATURES

- With a completely-independent two-point contact system, a stable contact pressure is maintained at all times.
- Low insertion and withdrawal force.
- Plug and Receptacle contacts share common tooling which means increased productivity and greater product diversity.
- Contact structure equipped with self-cleaning mechanism.
- Insulator designed to prevent mis-insertion and protect the contacts from damage.

ORDER CODE

880□-□□□-170□□-F

① ② ③ ④ ⑤ ⑥

*Please order in multiples of the quantity per package.

①	【Type】 Receptacle **8800 :** With flanges and without hooks **8801 :** With flanges and hooks **8802 :** Without flanges **8803 :** With power contacts
②	【Number of contacts】 **020 :** 20pin **026 :** 26pin **030 :** 30pin **032 :** 32pin **034 :** 34pin **040 :** 40pin **050 :** 50pin **052 :** 52pin **060 :** 60pin **068 :** 68pin **080 :** 80pin **100 :** 100pin
③	【Contact name】 **170**
④	【Contact tail style】 **S :** Straight **L :** Right angle
⑤	【Plating of contact area】 **Omit :** Au 0.05 μ m (Standard) **D :** Au 0.25 μ m (Upon request)
⑥	【RoHS】 **F :** RoHS Compliant

If you would like semi-customized products, please contact your local KEL sales office.

ORDER CODE

881□-□□□-170□□-F

① ② ③ ④ ⑤ ⑥

*Please order in multiples of the quantity per package.

①	【Type】 Plug **8810 :** With flanges and without hooks **8811 :** With flanges and hooks **8812 :** Without flanges **8813 :** With power contacts
②	【Number of contacts】 **020 :** 20pin **026 :** 26pin **030 :** 30pin **032 :** 32pin **034 :** 34pin **040 :** 40pin **050 :** 50pin **052 :** 52pin **060 :** 60pin **068 :** 68pin **080 :** 80pin **100 :** 100pin
③	【Contact name】 **170**
④	【Contact tail style】 **S :** Straight **L :** Right angle
⑤	【Plating of contact area】 **Omit :** Au 0.05 μ m (Standard) **D :** Au 0.25 μ m (Upon request)
⑥	【RoHS】 **F :** RoHS Compliant

If you would like semi-customized products, please contact your local KEL sales office.

SPECIFICATIONS

Material and plating		Electrical Characteristics	
Insulator material	Glass-filled Nylon 66 (UL94V-0),Black	Current rating	Signal contact ; 0.5A per contact Power contact (8803/8813 Series) ;2A per contact
		Contact resistance	25mΩ max.
Contact material	Copper alloy	Dielectric withstanding voltage	650V AC for 1 minute
		Insulation resistance	1,000MΩ min. at 500V DC
		Insertion force (Typical example)	18.6N max./ 20 pin, 37.2N max./ 40 pin, 55.9N max./ 60 pin, 93.1N max./ 100 pin
Contact plating	(Contact area) Gold over Nickel (Terminal area) Tin copper over Nickel	Withdrawal force (Typical example)	2.9N min./ 20 pin, 7.8N min./ 40 pin, 11.8N min./ 60 pin, 19.6N min./ 100 pin
		Operating temperature	-55°C to +85°C

* 1A per terminal is possible under certain conditions limiting the number of contacts to be used. For more details, please contact your local KEL sales office.

B.C.E. S.r.l. Via Regina Pacis, 54/c - I 41049 Sassuolo (MO) Tel.: (+39) 0536 811616 - Fax.: (+39) 0536 811500 e-mail: bce@bce.it - Website: www.bce.it

Mating Drawing

Unit : mm(inch)

Horizontal, Vertical and Stacked mating options available as illustrated.

◆Horizontal Mating

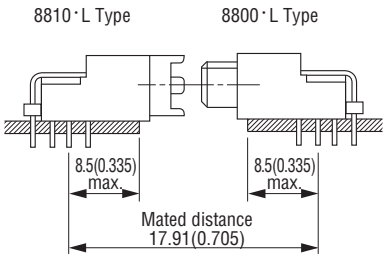

◆Stacked Mating

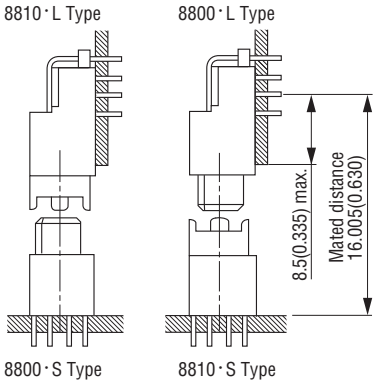

◆Vertical Mating

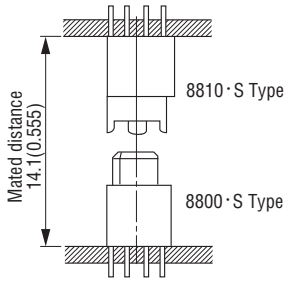

8800/8801-□□□-170S□-F (Receptacle, With flanges, Straight)

Unit : mm(inch)

Printed Circuit Board Layout (Component Side View)

For 20,32,40,52,60,68,80,100 pins

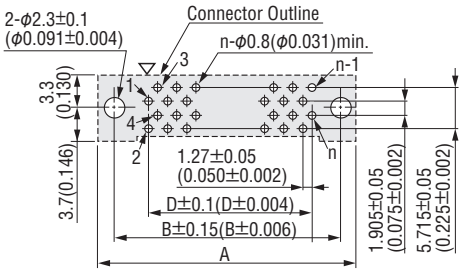

For 26,30,34,50 pins

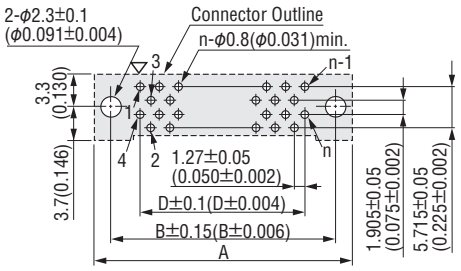

Recommended PCB Thickness $t = 1.6^{+0.2}_{-0.1}$ $(0.063^{+0.008}_{-0.004})$

▽=Polarity identification "n" is number of contacts.

8801series

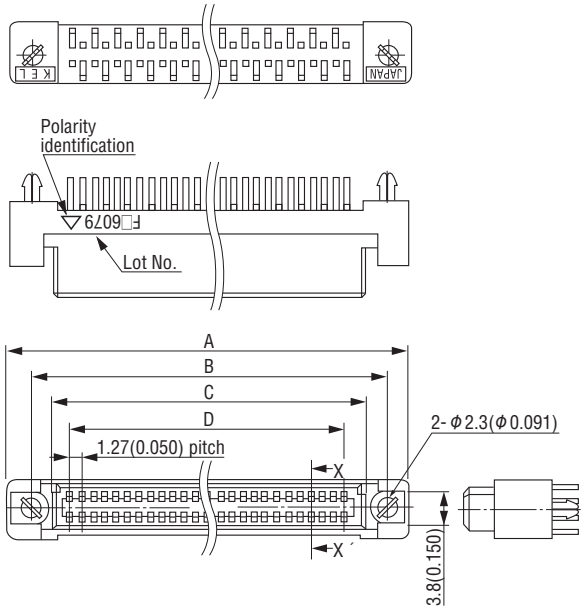

8800series

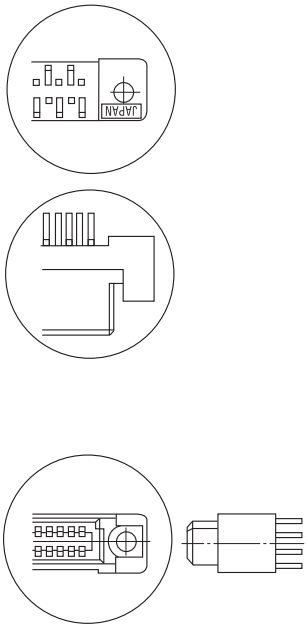

X-X' Cross Section

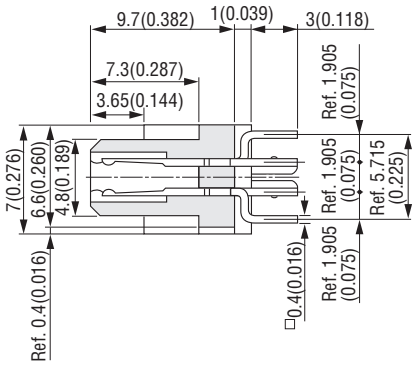

Packaging style
Pipe

Product Table / Dimensions

No. of contacts	Part Number	A	B	C	D	Number of packaging
20	8800/8801-020-170S□-F	25.43 (1.001)	20.32 (0.800)	15.43 (0.607)	11.43 (0.450)	20
26	8800/8801-026-170S□-F	29.24 (1.151)	24.13 (0.950)	19.24 (0.757)	15.24 (0.600)	17
30	8800/8801-030-170S□-F	31.78 (1.251)	26.67 (1.050)	21.78 (0.857)	17.78 (0.700)	16
32	8800/8801-032-170S□-F	33.05 (1.301)	27.94 (1.100)	23.05 (0.907)	19.05 (0.750)	15
34	8800/8801-034-170S□-F	34.32 (1.351)	29.21 (1.150)	24.32 (0.957)	20.32 (0.800)	14
40	8800/8801-040-170S□-F	38.13 (1.501)	33.02 (1.300)	28.13 (1.107)	24.13 (0.950)	13
50	8800/8801-050-170S□-F	44.48 (1.751)	39.37 (1.550)	34.48 (1.357)	30.48 (1.200)	11
52	8800/8801-052-170S□-F	45.75 (1.801)	40.64 (1.600)	35.75 (1.407)	31.75 (1.250)	11
60	8800/8801-060-170S□-F	50.83 (2.001)	45.72 (1.800)	40.83 (1.607)	36.83 (1.450)	10
68	8800/8801-068-170S□-F	55.91 (2.201)	50.80 (2.000)	45.91 (1.807)	41.91 (1.650)	9
80	8800/8801-080-170S□-F	63.53 (2.501)	58.42 (2.300)	53.53 (2.107)	49.53 (1.950)	8
100	8800/8801-100-170S□-F	76.23 (3.001)	71.12 (2.800)	66.23 (2.607)	62.23 (2.450)	6

8802-□□□-170S□-F (Receptacle, Without flanges, Straight)

Unit : mm(inch)

Printed Circuit Board Layout (Component Side View)

For 20,32,40,52,60,68,80,100 pins

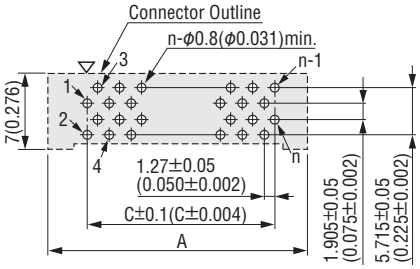

For 26,30,34,50 pins

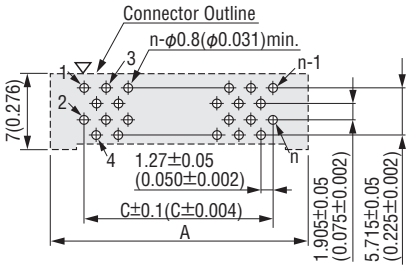

Recommended PCB Thickness $t = 1.6^{+0.2}_{-0.1}$ $(0.063^{+0.008}_{-0.004})$

▽=Polarity identification "n" is number of contacts.

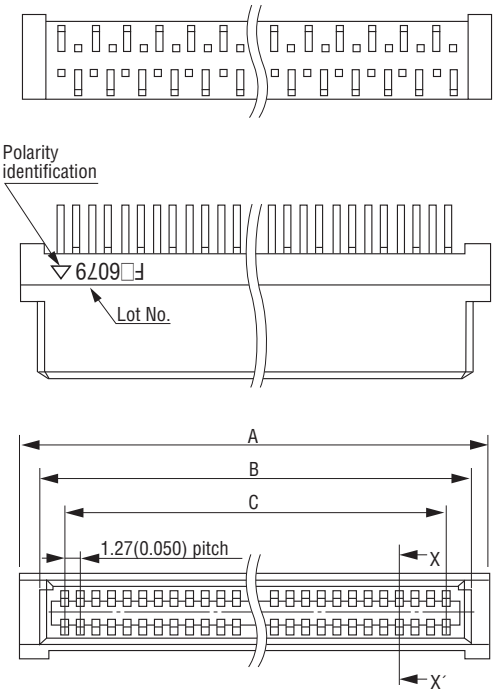

X-X′Cross Section

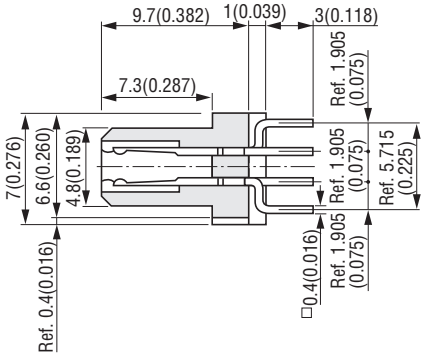

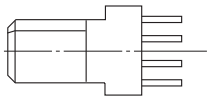

Packaging style
Pipe

Product Table / Dimensions

No. of contacts	Part Number	A	B	C	Number of packaging
20	8802-020-170S□-F	17.83 (0.702)	15.43 (0.607)	11.43 (0.450)	28
26	8802-026-170S□-F	21.64 (0.852)	19.24 (0.757)	15.24 (0.600)	23
30	8802-030-170S□-F	24.18 (0.952)	21.78 (0.857)	17.78 (0.700)	21
32	8802-032-170S□-F	25.45 (1.002)	23.05 (0.907)	19.05 (0.750)	20
34	8802-034-170S□-F	26.72 (1.052)	24.32 (0.957)	20.32 (0.800)	19
40	8802-040-170S□-F	30.53 (1.202)	28.13 (1.107)	24.13 (0.950)	16
50	8802-050-170S□-F	36.88 (1.452)	34.48 (1.357)	30.48 (1.200)	13
52	8802-052-170S□-F	38.15 (1.502)	35.75 (1.407)	31.75 (1.250)	13
60	8802-060-170S□-F	43.23 (1.702)	40.83 (1.607)	36.83 (1.450)	11
68	8802-068-170S□-F	48.31 (1.902)	45.91 (1.807)	41.91 (1.650)	10
80	8802-080-170S□-F	55.93 (2.202)	53.53 (2.107)	49.53 (1.950)	9
100	8802-100-170S□-F	68.63 (2.702)	66.23 (2.607)	62.23 (2.450)	7

B.C.E. S.r.l. Via Regina Pacis, 54/c - I 41049 Sassuolo (MO) Tel.: (+39) 0536 811616 - Fax.: (+39) 0536 811500 e-mail: bce@bce.it - Website: www.bce.it

8800/8801-□□□-170L□-F (Receptacle, With flanges, Right angle)

Unit : mm(inch)

Printed Circuit Board Layout (Component Side View)

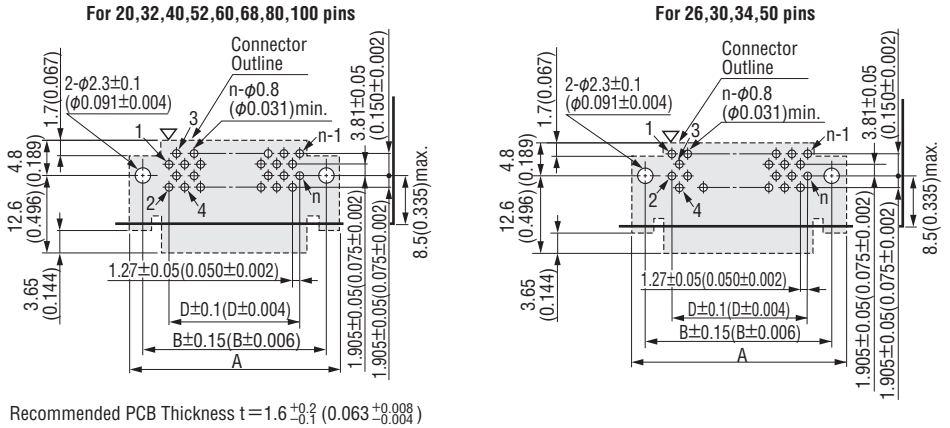

Recommended PCB Thickness $t = 1.6^{+0.2}_{-0.1}$ $(0.063^{+0.008}_{-0.004})$

▽=Polarity identification "n" is number of contacts.

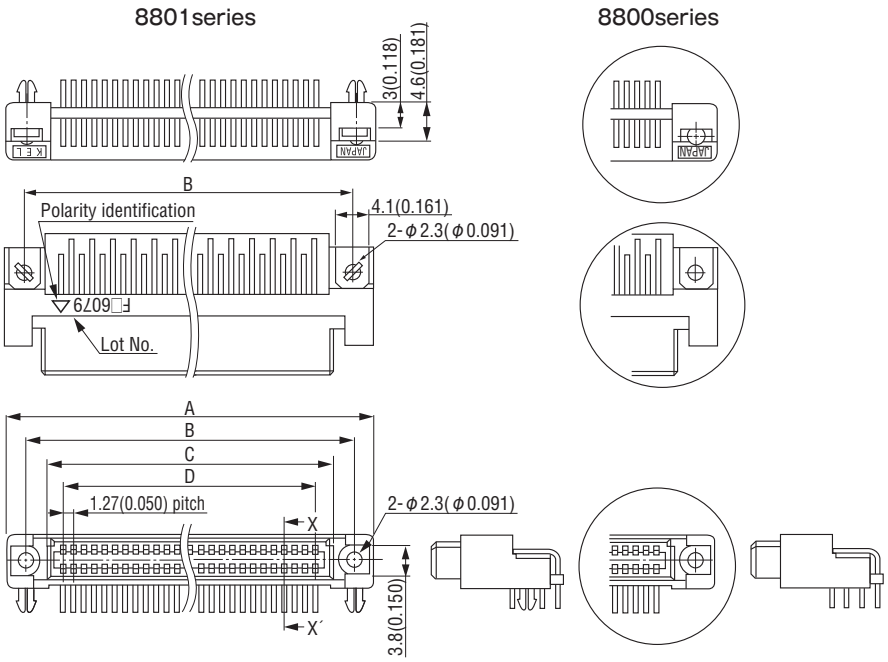

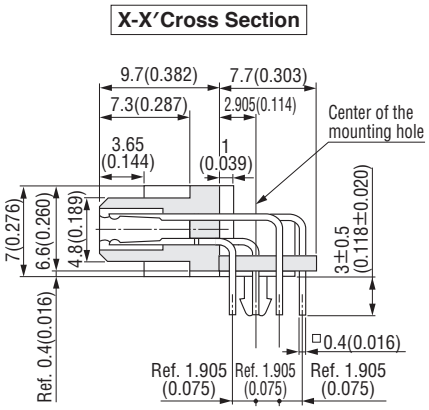

Packaging style
Pipe

Product Table / Dimensions

No. of contacts	Part Number	A	B	C	D	Number of packaging
20	8800/8801-020-170L□-F	25.43 (1.001)	20.32 (0.800)	15.43 (0.607)	11.43 (0.450)	20
26	8800/8801-026-170L□-F	29.24 (1.151)	24.13 (0.950)	19.24 (0.757)	15.24 (0.600)	17
30	8800/8801-030-170L□-F	31.78 (1.251)	26.67 (1.050)	21.78 (0.857)	17.78 (0.700)	16
32	8800/8801-032-170L□-F	33.05 (1.301)	27.94 (1.100)	23.05 (0.907)	19.05 (0.750)	15
34	8800/8801-034-170L□-F	34.32 (1.351)	29.21 (1.150)	24.32 (0.957)	20.32 (0.800)	14
40	8800/8801-040-170L□-F	38.13 (1.501)	33.02 (1.300)	28.13 (1.107)	24.13 (0.950)	13
50	8800/8801-050-170L□-F	44.48 (1.751)	39.37 (1.550)	34.48 (1.357)	30.48 (1.200)	11
52	8800/8801-052-170L□-F	45.75 (1.801)	40.64 (1.600)	35.75 (1.407)	31.75 (1.250)	11
60	8800/8801-060-170L□-F	50.83 (2.001)	45.72 (1.800)	40.83 (1.607)	36.83 (1.450)	10
68	8800/8801-068-170L□-F	55.91 (2.201)	50.80 (2.000)	45.91 (1.807)	41.91 (1.650)	9
80	8800/8801-080-170L□-F	63.53 (2.501)	58.42 (2.300)	53.53 (2.107)	49.53 (1.950)	8
100	8800/8801-100-170L□-F	76.23 (3.001)	71.12 (2.800)	66.23 (2.607)	62.23 (2.450)	6

8802-□□□-170L□-F (Receptacle, Without flanges, Right angle)

Unit : mm(inch)

Printed Circuit Board Layout (Component Side View)

For 20,32,40,52,60,68,80,100 pins

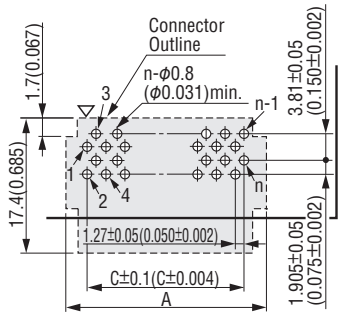

For 26,30,34,50 pins

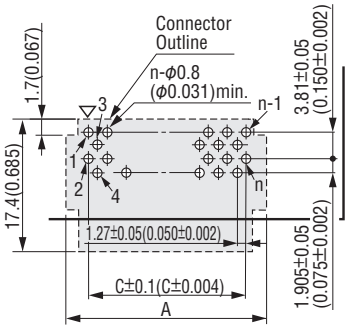

Recommended PCB Thickness $t = 1.6^{+0.2}_{-0.1}$ ($0.063^{+0.008}_{-0.004}$)

▽=Polarity identification "n" is number of contacts.

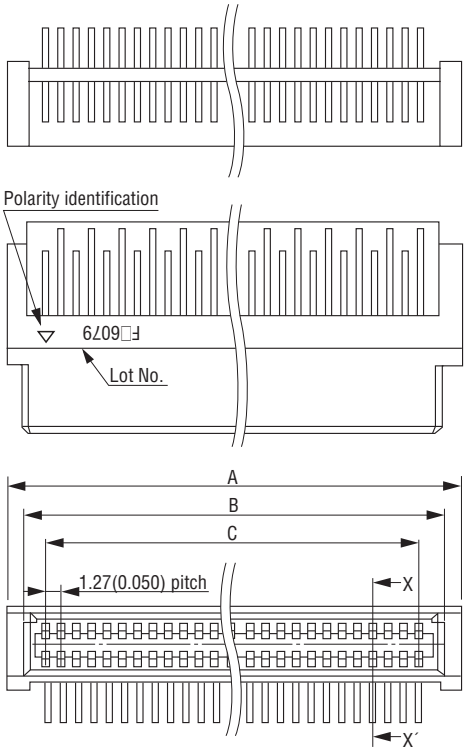

X-X′Cross Section

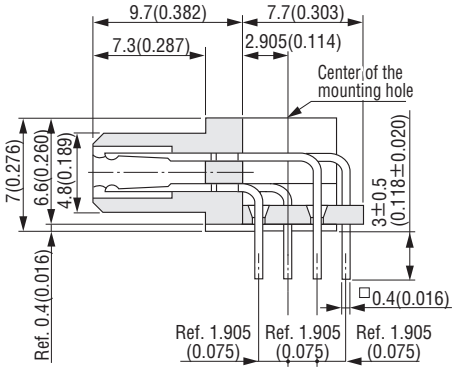

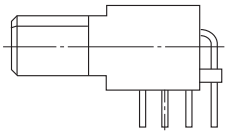

Packaging style
Pipe

Product Table / Dimensions

No. of contacts	Part Number	A	B	C	Number of packaging
20	8802-020-170L□-F	17.83 (0.702)	15.43 (0.607)	11.43 (0.450)	28
26	8802-026-170L□-F	21.64 (0.852)	19.24 (0.757)	15.24 (0.600)	23
30	8802-030-170L□-F	24.18 (0.952)	21.78 (0.857)	17.78 (0.700)	21
32	8802-032-170L□-F	25.45 (1.002)	23.05 (0.907)	19.05 (0.750)	20
34	8802-034-170L□-F	26.72 (1.052)	24.32 (0.957)	20.32 (0.800)	19
40	8802-040-170L□-F	30.53 (1.202)	28.13 (1.107)	24.13 (0.950)	16
50	8802-050-170L□-F	36.88 (1.452)	34.48 (1.357)	30.48 (1.200)	13
52	8802-052-170L□-F	38.15 (1.502)	35.75 (1.407)	31.75 (1.250)	13
60	8802-060-170L□-F	43.23 (1.702)	40.83 (1.607)	36.83 (1.450)	11
68	8802-068-170L□-F	48.31 (1.902)	45.91 (1.807)	41.91 (1.650)	10
80	8802-080-170L□-F	55.93 (2.202)	53.53 (2.107)	49.53 (1.950)	9
100	8802-100-170L□-F	68.63 (2.702)	66.23 (2.607)	62.23 (2.450)	7

8810/8811-□□□-170S□-F (Plug, With flanges, Straight)

Unit : mm(inch)

Printed Circuit Board Layout (Component Side View)

For 20,32,40,52,60,68,80,100 pins

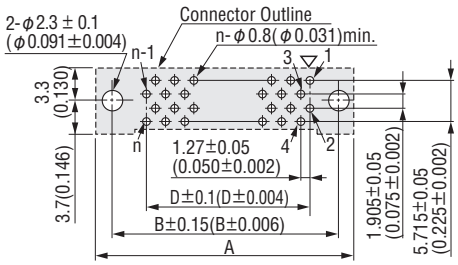

For 26,30,34,50 pins

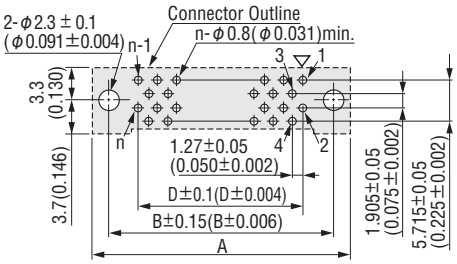

Recommended PCB Thickness $t = 1.6^{+0.2}_{-0.1}$ $(0.063^{+0.008}_{-0.004})$

▽=Polarity identification "n" is number of contacts.

8811series

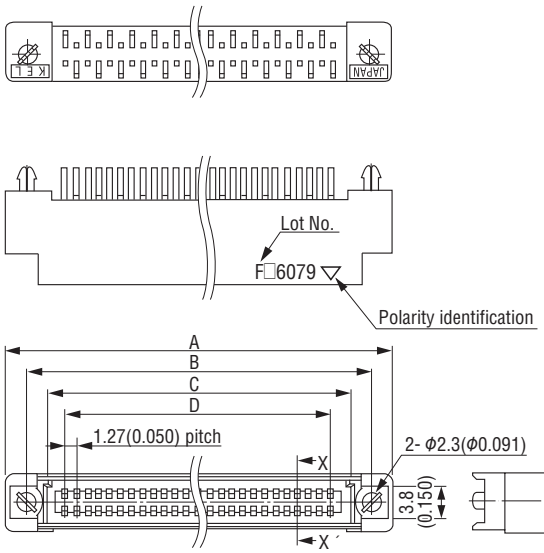

8810series

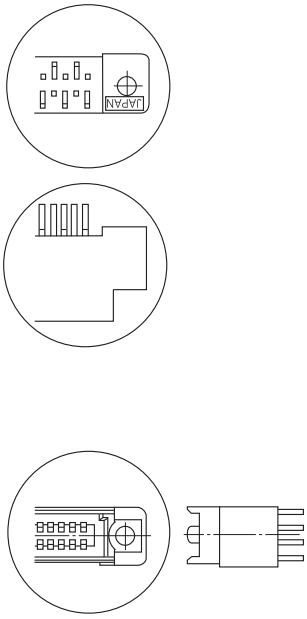

X-X′Cross Section

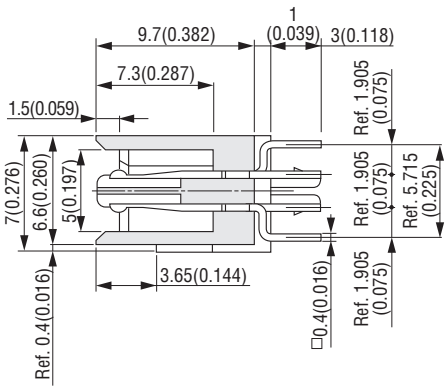

Packaging style
Pipe

Product Table / Dimensions

No. of contacts	Part Number	A	B	C	D	Number of packaging
20	8810/8811-020-170S□-F	25.43 (1.001)	20.32 (0.800)	15.83 (0.623)	11.43 (0.450)	20
26	8810/8811-026-170S□-F	29.24 (1.151)	24.13 (0.950)	19.64 (0.773)	15.24 (0.600)	17
30	8810/8811-030-170S□-F	31.78 (1.251)	26.67 (1.050)	22.18 (0.873)	17.78 (0.700)	16
32	8810/8811-032-170S□-F	33.05 (1.301)	27.94 (1.100)	23.45 (0.923)	19.05 (0.750)	15
34	8810/8811-034-170S□-F	34.32 (1.351)	29.21 (1.150)	24.72 (0.973)	20.32 (0.800)	14
40	8810/8811-040-170S□-F	38.13 (1.501)	33.02 (1.300)	28.53 (1.123)	24.13 (0.950)	13
50	8810/8811-050-170S□-F	44.48 (1.751)	39.37 (1.550)	34.88 (1.373)	30.48 (1.200)	11
52	8810/8811-052-170S□-F	45.75 (1.801)	40.64 (1.600)	36.15 (1.423)	31.75 (1.250)	11
60	8810/8811-060-170S□-F	50.83 (2.001)	45.72 (1.800)	41.23 (1.623)	36.83 (1.450)	10
68	8810/8811-068-170S□-F	55.91 (2.201)	50.80 (2.000)	46.31 (1.823)	41.91 (1.650)	9
80	8810/8811-080-170S□-F	63.53 (2.501)	58.42 (2.300)	53.93 (2.123)	49.53 (1.950)	8
100	8810/8811-100-170S□-F	76.23 (3.001)	71.12 (2.800)	66.63 (2.623)	62.23 (2.450)	6

8812-□□□-170S□-F (Plug, Without flanges, Straight)

Unit : mm(inch)

Printed Circuit Board Layout (Component Side View)

For 20,32,40,52,60,68,80,100 pins

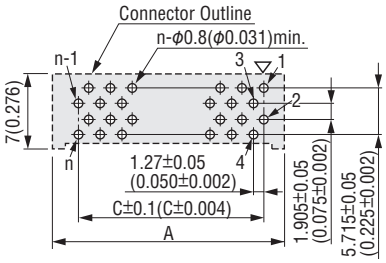

For 26,30,34,50 pins

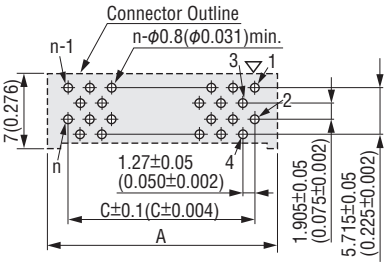

Recommended PCB Thickness $t = 1.6^{+0.2}_{-0.1}$ $(0.063^{+0.008}_{-0.004})$

▽=Polarity identification "n" is number of contacts.

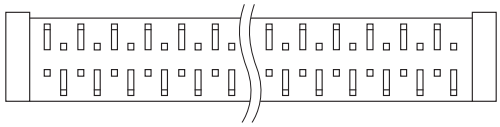

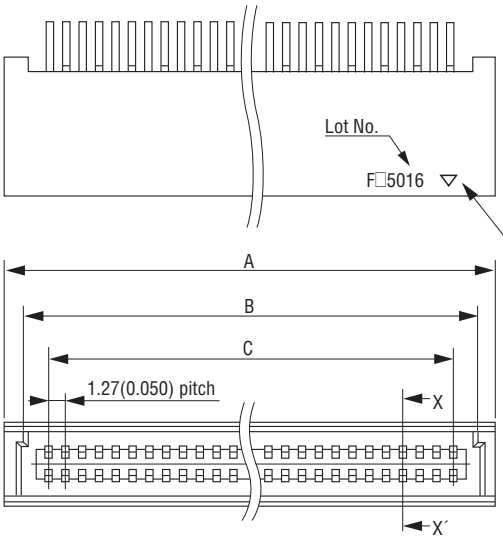

X-X′Cross Section

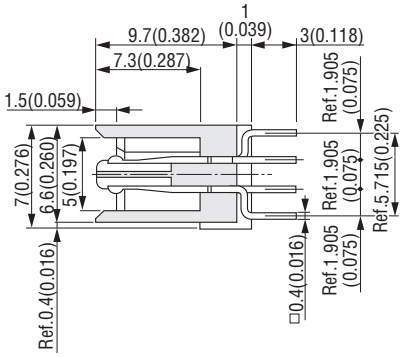

Packaging style
Pipe

Product Table / Dimensions

No. of contacts	Part Number	A	B	C	Number of packaging
20	8812-020-170S□-F	17.83 (0.702)	15.83 (0.623)	11.43 (0.450)	28
26	8812-026-170S□-F	21.64 (0.852)	19.64 (0.773)	15.24 (0.600)	23
30	8812-030-170S□-F	24.18 (0.952)	22.18 (0.873)	17.78 (0.700)	21
32	8812-032-170S□-F	25.45 (1.002)	23.45 (0.923)	19.05 (0.750)	20
34	8812-034-170S□-F	26.72 (1.052)	24.72 (0.973)	20.32 (0.800)	19
40	8812-040-170S□-F	30.53 (1.202)	28.53 (1.123)	24.13 (0.950)	16
50	8812-050-170S□-F	36.88 (1.452)	34.88 (1.373)	30.48 (1.200)	13
52	8812-052-170S□-F	38.15 (1.502)	36.15 (1.423)	31.75 (1.250)	13
60	8812-060-170S□-F	43.23 (1.702)	41.23 (1.623)	36.83 (1.450)	11
68	8812-068-170S□-F	48.31 (1.902)	46.31 (1.823)	41.91 (1.650)	10
80	8812-080-170S□-F	55.93 (2.202)	53.93 (2.123)	49.53 (1.950)	9
100	8812-100-170S□-F	68.63 (2.702)	66.63 (2.623)	62.23 (2.450)	7

8810/8811-□□□-170L□-F (Plug, With flanges, Right angle)

Unit : mm(inch)

Printed Circuit Board Layout (Component Side View)

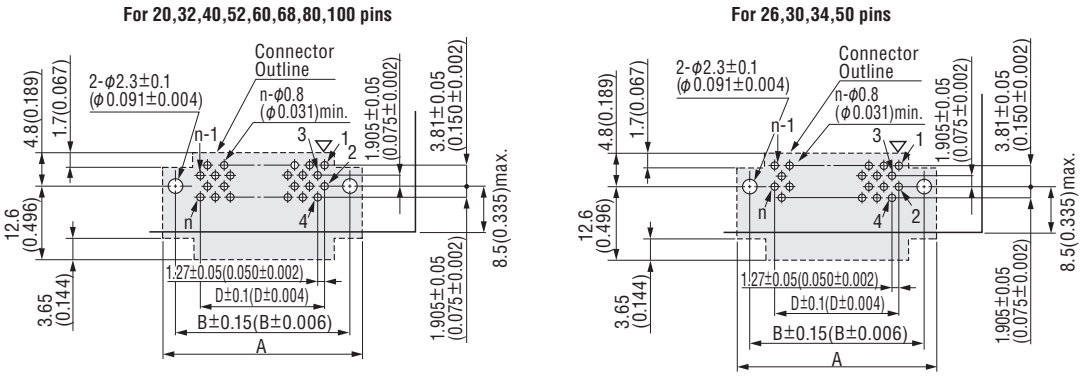

Recommended PCB Thickness $t = 1.6^{+0.2}_{-0.1}$ $(0.063^{+0.008}_{-0.004})$ ▽=Polarity identification "n" is number of contacts.

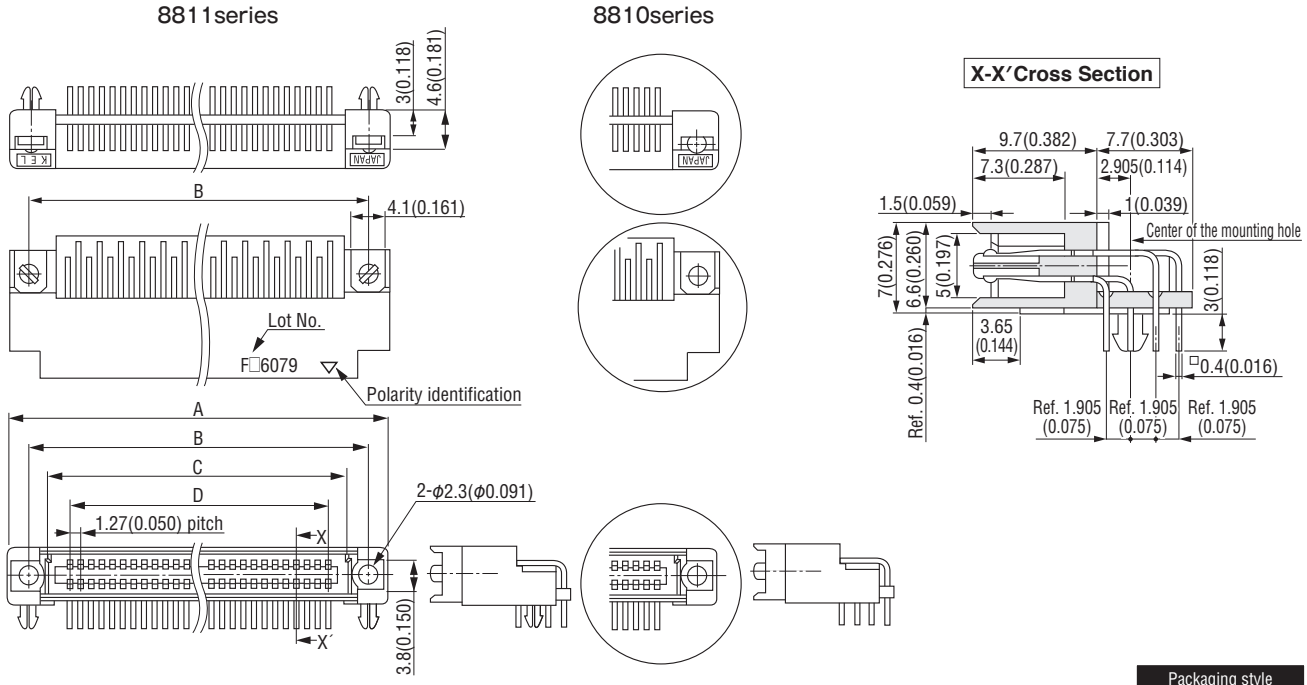

Packaging style
Pipe

Product Table / Dimensions

No. of contacts	Part Number	A	B	C	D	Number of packaging
20	8810/8811-020-170L□-F	25.43 (1.001)	20.32 (0.800)	15.83 (0.623)	11.43 (0.450)	20
26	8810/8811-026-170L□-F	29.24 (1.151)	24.13 (0.950)	19.64 (0.773)	15.24 (0.600)	17
30	8810/8811-030-170L□-F	31.78 (1.251)	26.67 (1.050)	22.18 (0.873)	17.78 (0.700)	16
32	8810/8811-032-170L□-F	33.05 (1.301)	27.94 (1.100)	23.45 (0.923)	19.05 (0.750)	15
34	8810/8811-034-170L□-F	34.32 (1.351)	29.21 (1.150)	24.72 (0.973)	20.32 (0.800)	14
40	8810/8811-040-170L□-F	38.13 (1.501)	33.02 (1.300)	28.53 (1.123)	24.13 (0.950)	13
50	8810/8811-050-170L□-F	44.48 (1.751)	39.37 (1.550)	34.88 (1.373)	30.48 (1.200)	11
52	8810/8811-052-170L□-F	45.75 (1.801)	40.64 (1.600)	36.15 (1.423)	31.75 (1.250)	11
60	8810/8811-060-170L□-F	50.83 (2.001)	45.72 (1.800)	41.23 (1.623)	36.83 (1.450)	10
68	8810/8811-068-170L□-F	55.91 (2.201)	50.80 (2.000)	46.31 (1.823)	41.91 (1.650)	9
80	8810/8811-080-170L□-F	63.53 (2.501)	58.42 (2.300)	53.93 (2.123)	49.53 (1.950)	8
100	8810/8811-100-170L□-F	76.23 (3.001)	71.12 (2.800)	66.63 (2.623)	62.23 (2.450)	6

8812-□□□-170L□-F (Plug, Without flanges, Right angle)

Unit : mm(inch)

Printed Circuit Board Layout (Component Side View)

For 20,32,40,52,60,68,80,100 pins

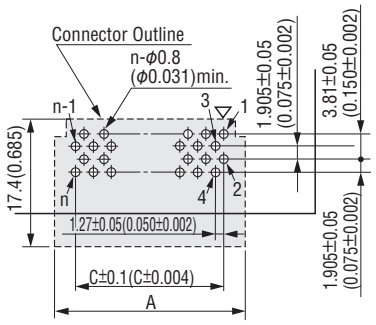

For 26,30,34,50 pins

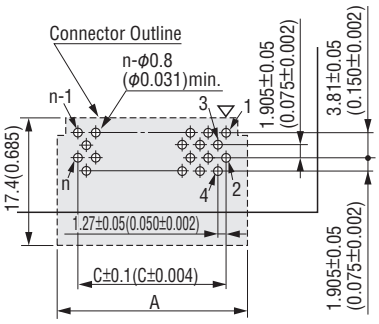

Recommended PCB Thickness $t = 1.6^{+0.2}_{-0.1}$ $(0.063^{+0.008}_{-0.004})$ ▽=Polarity identification "n" is number of contacts.

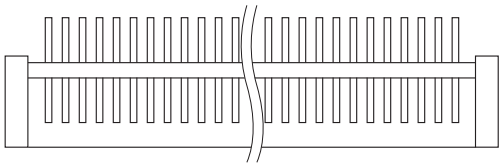

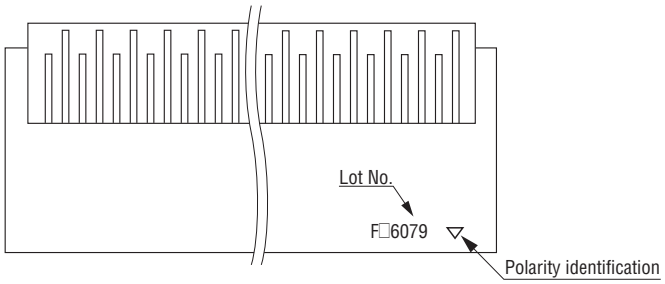

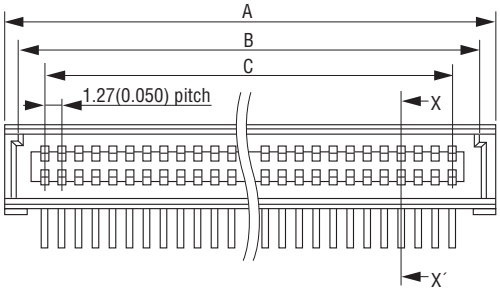

X-X′Cross Section

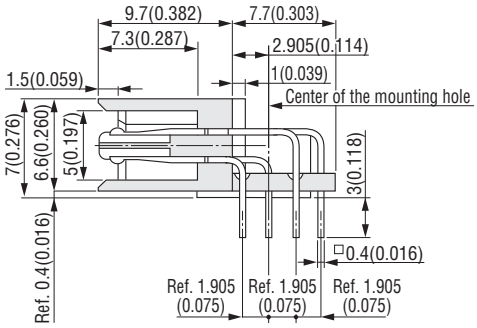

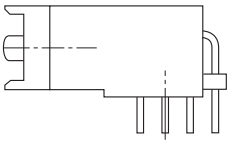

Packaging style
Pipe

Product Table / Dimensions

No. of contacts	Part Number	A	B	C	Number of packaging
20	8812-020-170L□-F	17.83 (0.702)	15.83 (0.623)	11.43 (0.450)	28
26	8812-026-170L□-F	21.64 (0.852)	19.64 (0.773)	15.24 (0.600)	23
30	8812-030-170L□-F	24.18 (0.952)	22.18 (0.873)	17.78 (0.700)	21
32	8812-032-170L□-F	25.45 (1.002)	23.45 (0.923)	19.05 (0.750)	20
34	8812-034-170L□-F	26.72 (1.052)	24.72 (0.973)	20.32 (0.800)	19
40	8812-040-170L□-F	30.53 (1.202)	28.53 (1.123)	24.13 (0.950)	16
50	8812-050-170L□-F	36.88 (1.452)	34.88 (1.373)	30.48 (1.200)	13
52	8812-052-170L□-F	38.15 (1.502)	36.15 (1.423)	31.75 (1.250)	13
60	8812-060-170L□-F	43.23 (1.702)	41.23 (1.623)	36.83 (1.450)	11
68	8812-068-170L□-F	48.31 (1.902)	46.31 (1.823)	41.91 (1.650)	10
80	8812-080-170L□-F	55.93 (2.202)	53.93 (2.123)	49.53 (1.950)	9
100	8812-100-170L□-F	68.63 (2.702)	66.63 (2.623)	62.23 (2.450)	7

B.C.E. S.r.l. Via Regina Pacis, 54/c - I 41049 Sassuolo (MO) Tel.: (+39) 0536 811616 - Fax.: (+39) 0536 811500 e-mail: bce@bce.it - Website: www.bce.it

8803-□□□-170S□-F (Receptacle, With power contacts, Straight)

Unit : mm(inch)

Printed Circuit Board Layout (Component Side View)

For 20,32,40,52,60,68,80,100 pins

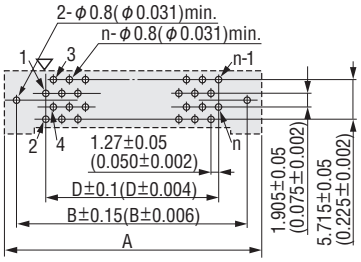

For 26,30,34,50 pins

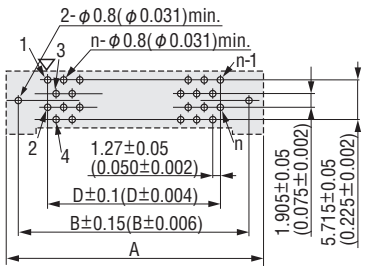

Recommended PCB Thickness $t = 1.6^{+0.2}_{-0.1}$ $(0.063^{+0.008}_{-0.004})$

▽=Polarity identification "n" is number of contacts.

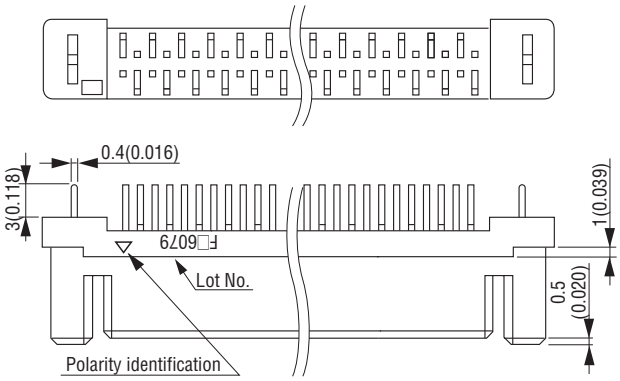

X-X′Cross Section

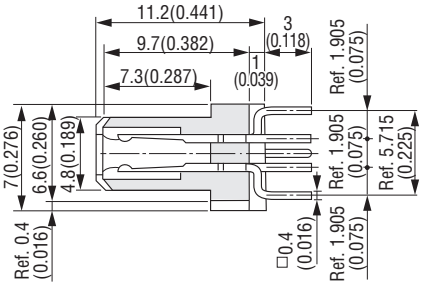

Y-Y′Cross Section

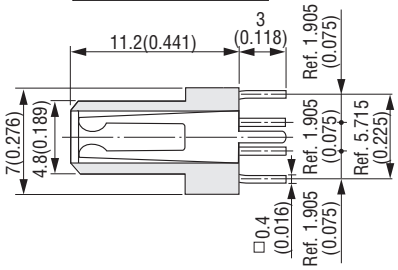

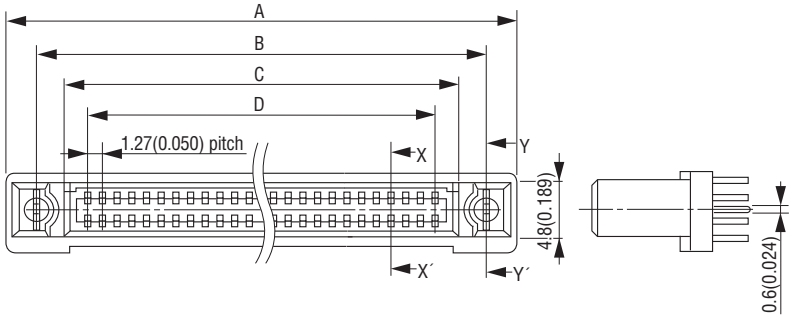

Packaging style
Pipe

Product Table / Dimensions

No. of contacts	Part Number	A	B	C	D	Number of packaging
20	8803-020-170S□-F	25.43 (1.001)	20.32 (0.800)	15.43 (0.607)	11.43 (0.450)	20
26	8803-026-170S□-F	29.24 (1.151)	24.13 (0.950)	19.24 (0.757)	15.24 (0.600)	17
30	8803-030-170S□-F	31.78 (1.251)	26.67 (1.050)	21.78 (0.857)	17.78 (0.700)	16
32	8803-032-170S□-F	33.05 (1.301)	27.94 (1.100)	23.05 (0.907)	19.05 (0.750)	15
34	8803-034-170S□-F	34.32 (1.351)	29.21 (1.150)	24.32 (0.957)	20.32 (0.800)	14
40	8803-040-170S□-F	38.13 (1.501)	33.02 (1.300)	28.13 (1.107)	24.13 (0.950)	13
50	8803-050-170S□-F	44.48 (1.751)	39.37 (1.550)	34.48 (1.357)	30.48 (1.200)	11
52	8803-052-170S□-F	45.75 (1.801)	40.64 (1.593)	35.75 (1.407)	31.75 (1.250)	11
60	8803-060-170S□-F	50.83 (2.001)	45.72 (1.800)	40.83 (1.607)	36.83 (1.450)	10
68	8803-068-170S□-F	55.91 (2.201)	50.80 (2.000)	45.91 (1.807)	41.91 (1.650)	9
80	8803-080-170S□-F	63.53 (2.501)	58.42 (2.300)	53.53 (2.107)	49.53 (1.950)	8
100	8803-100-170S□-F	76.23 (3.001)	71.12 (2.800)	66.23 (2.607)	62.23 (2.450)	6

8813-□□□-170S□-F (Plug, With power contacts, Straight)

Unit : mm(inch)

Printed Circuit Board Layout (Component Side View)

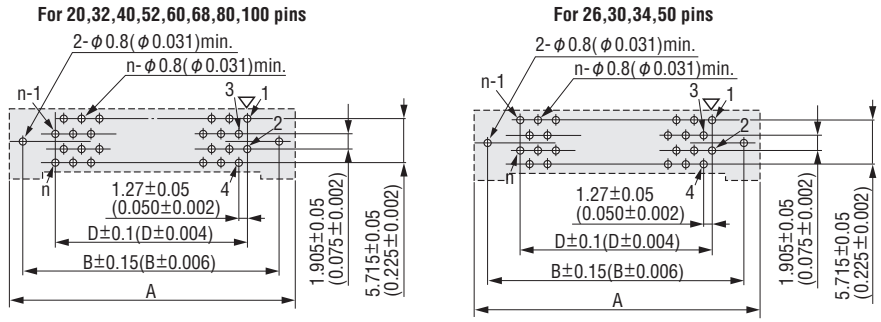

Recommended PCB Thickness $t = 1.6^{+0.2}_{-0.1}$ $(0.063^{+0.008}_{-0.004})$

▽=Polarity identification "n" is number of contacts.

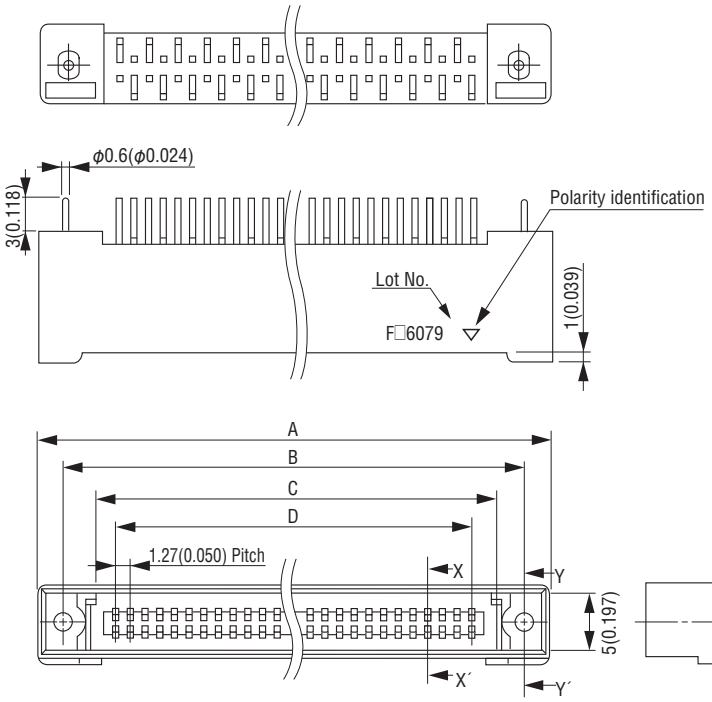

X-X′Cross Section

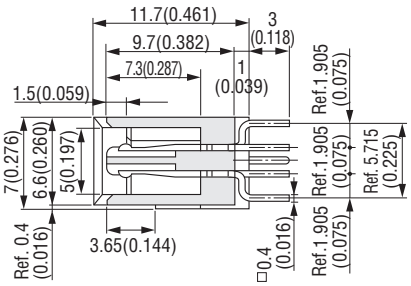

Y-Y′Cross Section

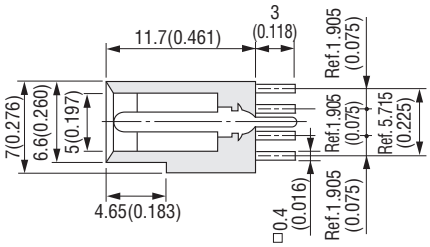

Packaging style
Pipe

Product Table / Dimensions

No. of contacts	Part Number	A	B	C	D	Number of packaging
20	8813-020-170S□-F	25.43 (1.001)	20.32 (0.800)	15.83 (0.623)	11.43 (0.450)	20
26	8813-026-170S□-F	29.24 (1.151)	24.13 (0.950)	19.64 (0.773)	15.24 (0.600)	17
30	8813-030-170S□-F	31.78 (1.251)	26.67 (1.050)	22.18 (0.873)	17.78 (0.700)	16
32	8813-032-170S□-F	33.05 (1.301)	27.94 (1.100)	23.45 (0.923)	19.05 (0.750)	15
34	8813-034-170S□-F	34.32 (1.351)	29.21 (1.150)	24.72 (0.973)	20.32 (0.800)	14
40	8813-040-170S□-F	38.13 (1.501)	33.02 (1.300)	28.53 (1.123)	24.13 (0.950)	13
50	8813-050-170S□-F	44.48 (1.751)	39.37 (1.550)	34.88 (1.373)	30.48 (1.200)	11
52	8813-052-170S□-F	45.75 (1.801)	40.64 (1.593)	36.15 (1.423)	31.75 (1.250)	11
60	8813-060-170S□-F	50.83 (2.001)	45.72 (1.800)	41.23 (1.623)	36.83 (1.450)	10
68	8813-068-170S□-F	55.91 (2.201)	50.80 (2.000)	46.31 (1.823)	41.91 (1.650)	9
80	8813-080-170S□-F	63.53 (2.501)	58.42 (2.300)	53.93 (2.123)	49.53 (1.950)	8
100	8813-100-170S□-F	76.23 (3.001)	71.12 (2.800)	66.63 (2.623)	62.23 (2.450)	6

8803-□□□-170L□-F (Receptacle, With power contacts, Right angle)

Unit : mm(inch)

Printed Circuit Board Layout (Component Side View)

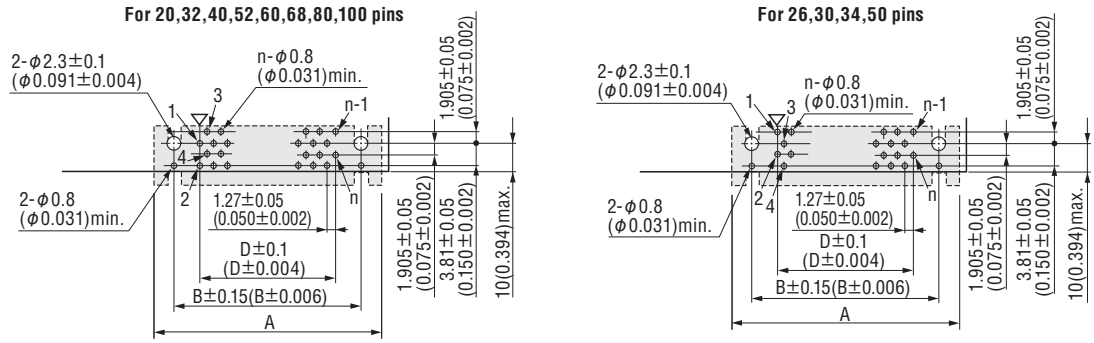

Recommended PCB Thickness $t = 1.6^{+0.2}_{-0.1}$ $(0.063^{+0.008}_{-0.004})$

▽=Polarity identification "n" is number of contacts.

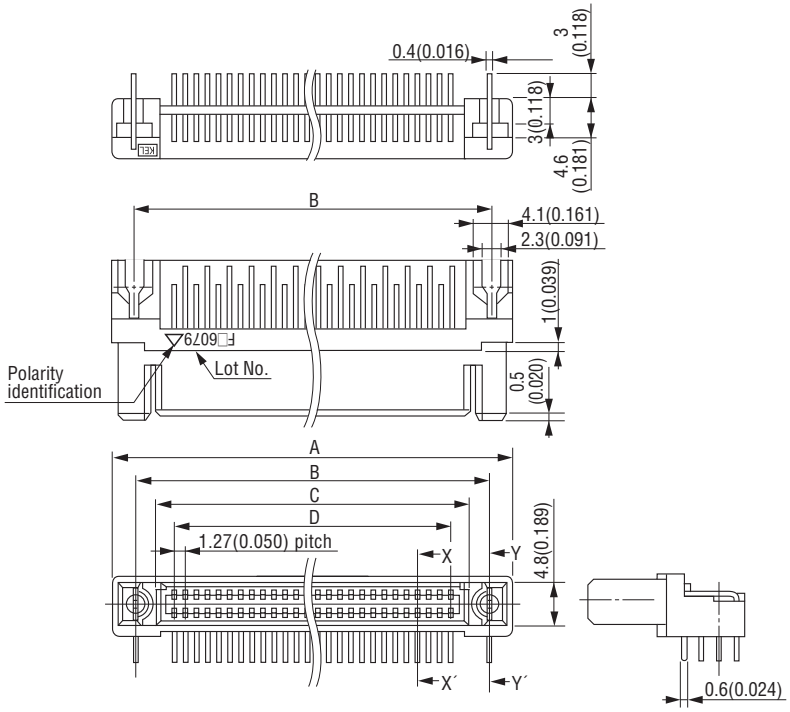

X-X′Cross Section

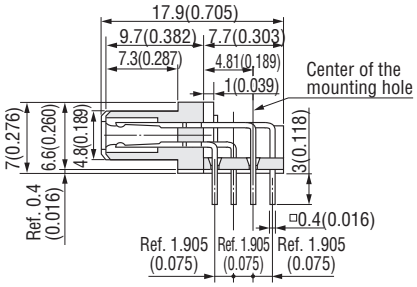

Y-Y′Cross Section

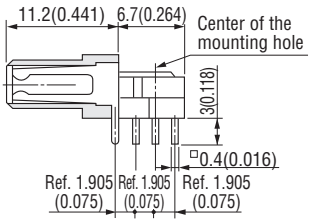

Packaging style
Pipe

Product Table / Dimensions

No. of contacts	Part Number	A	B	C	D	Number of packaging
20	8803-020-170L□-F	25.43 (1.001)	20.32 (0.800)	15.43 (0.607)	11.43 (0.450)	20
26	8803-026-170L□-F	29.24 (1.151)	24.13 (0.950)	19.24 (0.757)	15.24 (0.600)	17
30	8803-030-170L□-F	31.78 (1.251)	26.67 (1.050)	21.78 (0.857)	17.78 (0.700)	16
32	8803-032-170L□-F	33.05 (1.301)	27.94 (1.100)	23.05 (0.907)	19.05 (0.750)	15
34	8803-034-170L□-F	34.32 (1.351)	29.21 (1.150)	24.32 (0.957)	20.32 (0.800)	14
40	8803-040-170L□-F	38.13 (1.501)	33.02 (1.300)	28.13 (1.107)	24.13 (0.950)	13
50	8803-050-170L□-F	44.48 (1.751)	39.37 (1.550)	34.48 (1.357)	30.48 (1.200)	11
52	8803-052-170L□-F	45.75 (1.801)	40.64 (1.593)	35.75 (1.407)	31.75 (1.250)	11
60	8803-060-170L□-F	50.83 (2.001)	45.72 (1.800)	40.83 (1.607)	36.83 (1.450)	10
68	8803-068-170L□-F	55.91 (2.201)	50.80 (2.000)	45.91 (1.807)	41.91 (1.650)	9
80	8803-080-170L□-F	63.53 (2.501)	58.42 (2.300)	53.53 (2.107)	49.53 (1.950)	8
100	8803-100-170L□-F	76.23 (3.001)	71.12 (2.800)	66.23 (2.607)	62.23 (2.450)	6

8813-□□□-170L□-F (Plug, With power contacts, Right angle)

Unit : mm(inch)

Printed Circuit Board Layout (Component Side View)

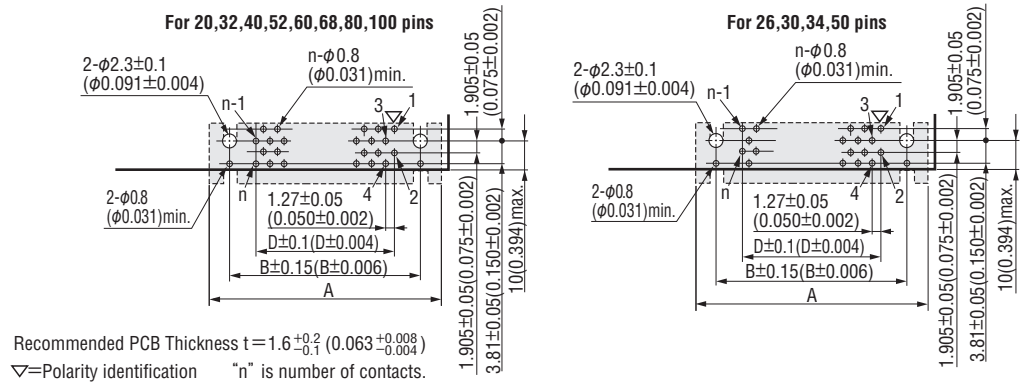

Recommended PCB Thickness $t = 1.6^{+0.2}_{-0.1}$ $(0.063^{+0.008}_{-0.004})$

▽=Polarity identification "n" is number of contacts.

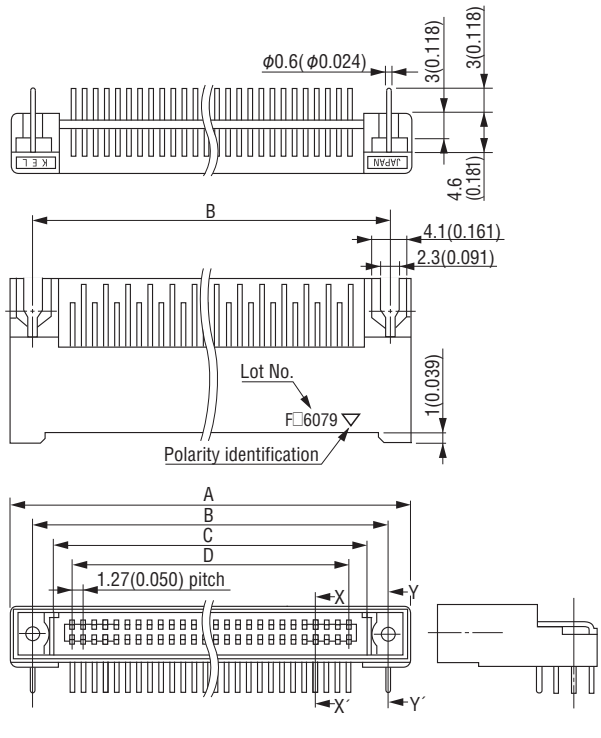

X-X′ Cross Section

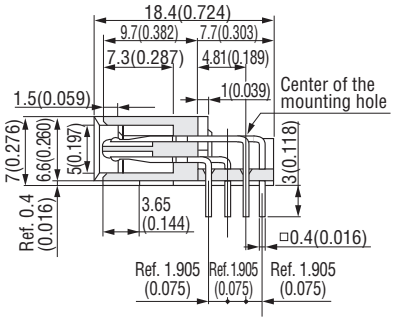

Y-Y′ Cross Section

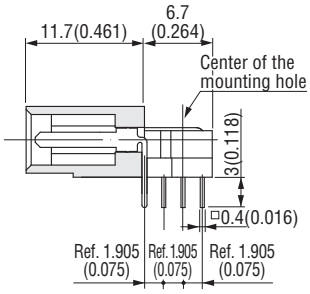

Packaging style
Pipe

Product Table / Dimensions

No. of contacts	Part Number	A	B	C	D	Number of packaging
20	8813-020-170L□-F	25.43 (1.001)	20.32 (0.800)	15.83 (0.623)	11.43 (0.450)	20
26	8813-026-170L□-F	29.24 (1.151)	24.13 (0.950)	19.64 (0.773)	15.24 (0.600)	17
30	8813-030-170L□-F	31.78 (1.251)	26.67 (1.050)	22.18 (0.873)	17.78 (0.700)	16
32	8813-032-170L□-F	33.05 (1.301)	27.94 (1.100)	23.45 (0.923)	19.05 (0.750)	15
34	8813-034-170L□-F	34.32 (1.351)	29.21 (1.150)	24.72 (0.973)	20.32 (0.800)	14
40	8813-040-170L□-F	38.13 (1.501)	33.02 (1.300)	28.53 (1.123)	24.13 (0.950)	13
50	8813-050-170L□-F	44.48 (1.751)	39.37 (1.550)	34.88 (1.373)	30.48 (1.200)	11
52	8813-052-170L□-F	45.75 (1.801)	40.64 (1.593)	36.15 (1.423)	31.75 (1.250)	11
60	8813-060-170L□-F	50.83 (2.001)	45.72 (1.800)	41.23 (1.623)	36.83 (1.450)	10
68	8813-068-170L□-F	55.91 (2.201)	50.80 (2.000)	46.31 (1.823)	41.91 (1.650)	9
80	8813-080-170L□-F	63.53 (2.501)	58.42 (2.300)	53.93 (2.123)	49.53 (1.950)	8
100	8813-100-170L□-F	76.23 (3.001)	71.12 (2.800)	66.63 (2.623)	62.23 (2.450)	6

Pin Assignment

Unit : mm(inch)

◆Horizontal Mating

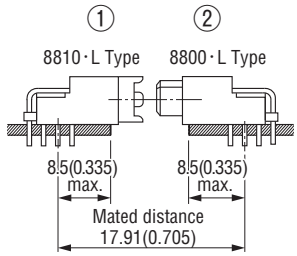

(Component Side View)

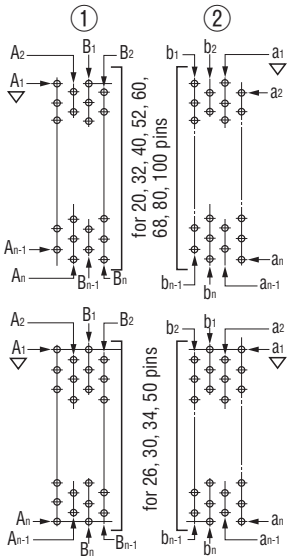

◆Vertical mating

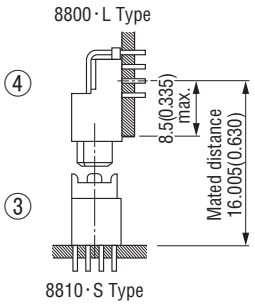

(Component Side View)

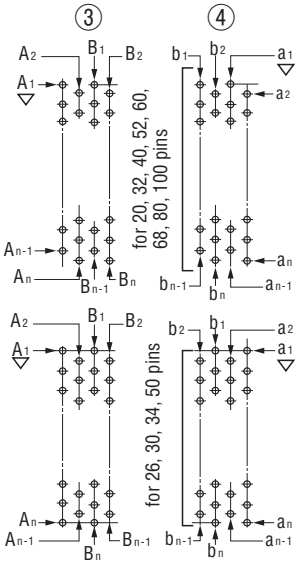

◆Stacked mating

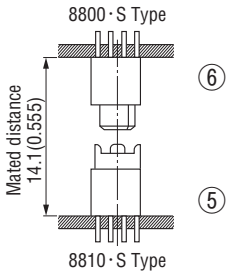

(Component Side View)

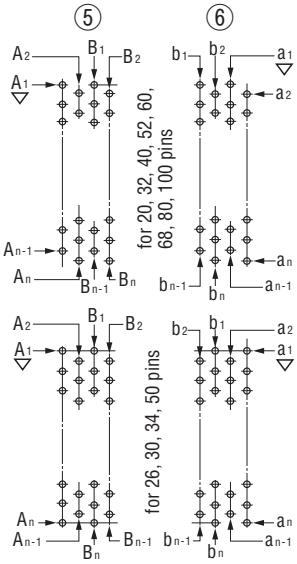

▽=Polarity identification

8832E-FS SERIES

1.27mm PITCH CONNECTOR / FLEXIBLE STRAIGHT TYPE

RoHS Compliant

FEATURES

- Standard stacked heights are 20, 24 and 30mm. (0.787´´, 0.945´´, 0.181´´)
- Other stacked heights from 18mm (0.709´´) to 30mm(1.181´´) are available.
- 8832E Series will mate with 8800/8801/8802 Series.
- With a completely-independent two-point contact system, a stable contact pressure is maintained at all times.
- Low insertion force and withdrawal force.

Note) Does not mate with 8822E/8825E.

ORDER CODE

8832E-□□□ FS □-□-F

① ② ③ ④ ⑤ ⑥

*Please order in multiples of the quantity per package.

①	【Type】 8832E : Plug
②	【Number of contacts】 020 : 20pin 030 : 30pin 040 : 40pin 050 : 50pin 060 : 60pin 080 : 80pin 100 : 100pin
③	【Contact tail style】 FS : Flexible straight
④	【Plating of contact area】 Omit : Au 0.05 μ m (Standard) D : Au 0.25 μ m (Upon request)
⑤	【Stacked height】 N : 20mm(0.787'') T : 24mm(0945'') Z : 30mm(1.181'')
⑥	【RoHS】 F : RoHS Compliant

If you would like semi-customized products, please contact your local KEL sales office.

SPECIFICATIONS

Material and plating		Electrical Characteristics	
Insulator material	Glass-filled Nylon 66 (UL94V-0),Black Spacer with alignment plate Glass-filled Nylon 46 (UL 94V-0), Black	Current rating	0.5A per contact
		Contact resistance	25mΩ max.
		Dielectric withstanding voltage	650V AC for 1 minute
Contact material	Copper alloy	Insulation resistance	1,000MΩ min. at 500V DC
		Insertion force (Typical example)	18.6N max./ 20 pin, 37.2N max./ 40 pin, 55.9N max./ 60 pin, 93.1N max./ 100 pin
Contact plating	(Contact area) Gold over Nickel (Terminal area) Tin copper over Nickel	Withdrawal force (Typical example)	2.9N min./ 20 pin, 7.8N min./ 40 pin, 11.8N min./ 60 pin, 19.6N min./ 100 pin
		Operating temperature	-55°C to +85°C

Mating Drawing

Unit : mm(inch)

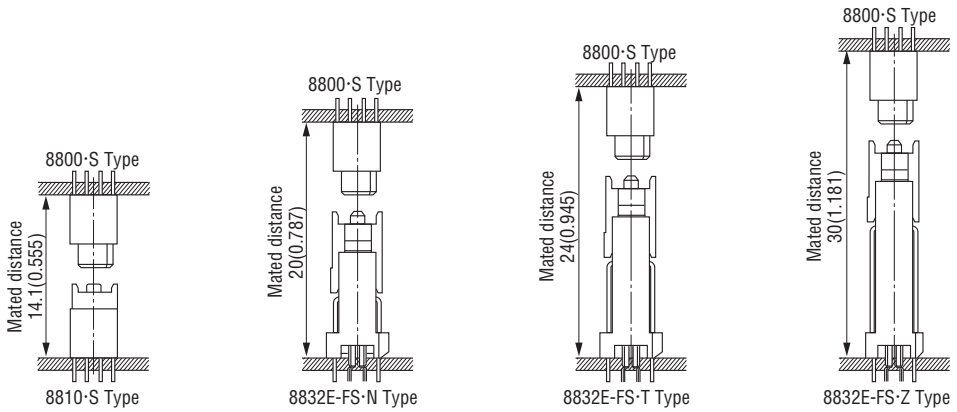

8832E-□□□FS□-□-F (Plug, Flexible straight)

Unit : mm(inch)

Printed Circuit Board Layout (Component Side View)

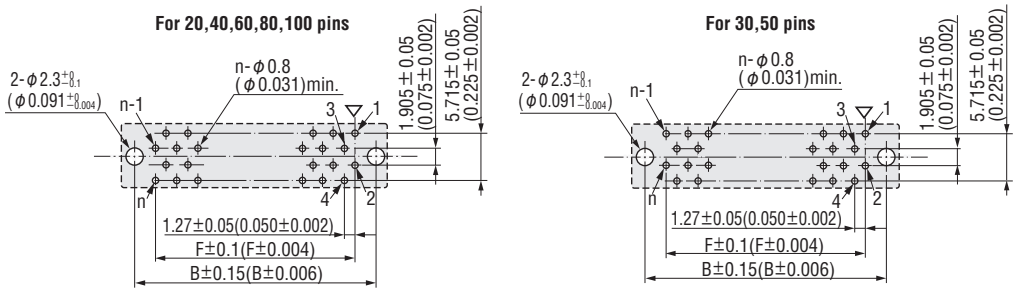

Recommended PCB Thickness $t = 1.6^{+0.2}_{-0.1}$ $(0.063^{+0.008}_{-0.004})$

▽=Polarity identification "n" is number of contacts.

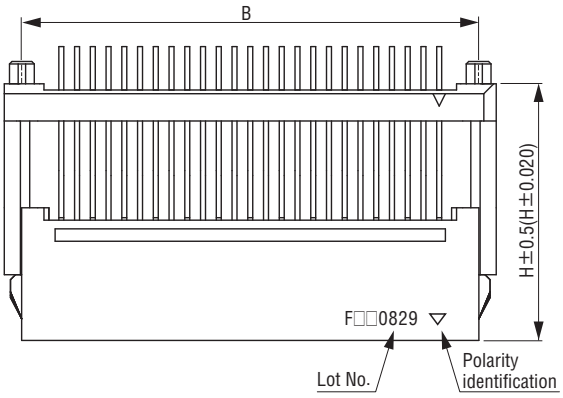

X-X′Cross Section

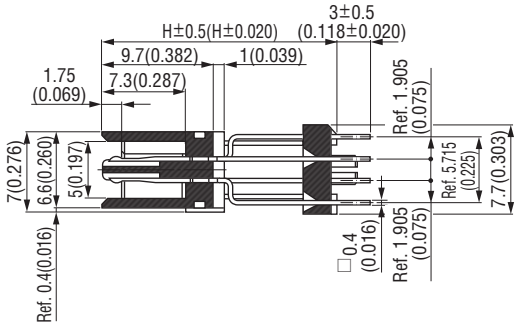

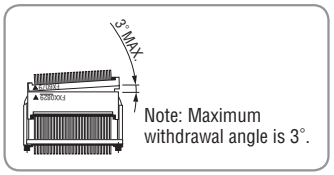

Note: Maximum withdrawal angle is 3°.

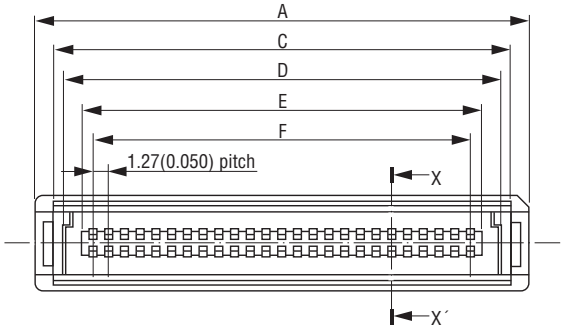

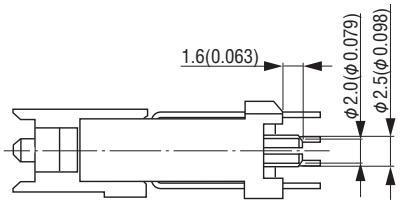

Packing style
Pipe

Product Table / Dimensions

No. of contact	Part Number	A	B	C	D	E	F	Number of packaging
20	8832E-020 FS□-□-F	20.63 (0.812)	17.78 (0.700)	17.83 (0.702)	15.83 (0.623)	13.13 (0.517)	11.43 (0.450)	24
30	8832E-030 FS□-□-F	26.98 (1.062)	24.13 (0.950)	24.18 (0.952)	22.18 (0.873)	19.48 (0.767)	17.78 (0.700)	18
40	8832E-040 FS□-□-F	33.33 (1.312)	30.48 (1.200)	30.53 (1.202)	28.53 (1.123)	25.83 (1.017)	24.13 (0.950)	15
50	8832E-050 FS□-□-F	39.68 (1.562)	36.83 (1.450)	36.88 (1.452)	34.88 (1.373)	32.18 (1.267)	30.48 (1.200)	12
60	8832E-060 FS□-□-F	46.03 (1.812)	43.18 (1.700)	43.23 (1.702)	41.23 (1.623)	38.53 (1.517)	36.83 (1.450)	11
80	8832E-080 FS□-□-F	58.73 (2.312)	55.88 (2.200)	55.93 (2.202)	53.93 (2.123)	51.23 (2.017)	49.53 (1.950)	8
100	8832E-100 FS□-□-F	71.43 (2.812)	68.58 (2.700)	68.63 (2.702)	66.63 (2.623)	63.93 (2.517)	62.23 (2.450)	7

Stacked height

Part Number	Stacked height	H
8832E-□□□FS□-N-F	20 (0.787)	16.6 (0.654)
8832E-□□□FS□-T-F	24 (0.945)	20.6 (0.811)
8832E-□□□FS□-Z-F	30 (1.181)	26.6 (1.047)

8806/8807 SERIES

1.27mm PITCH CONNECTOR / MULTI-PIN TYPE

RoHS Compliant

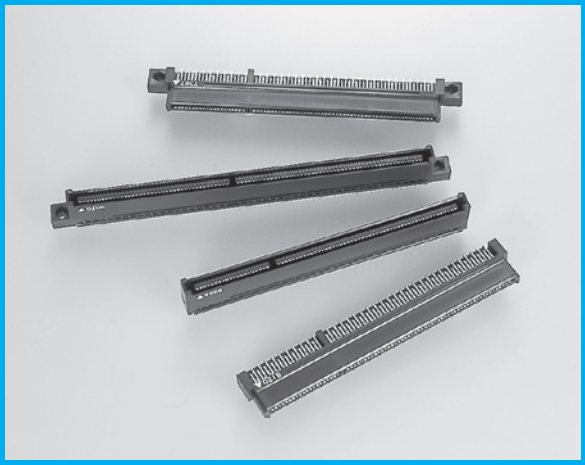

FEATURES

- With a completely-independent two-point contact system, a stable contact pressure is maintained at all times.
- Low insertion force and withdrawal force.
- With a guide mechanism, smooth mating can be achieved.
- Wide variations in the number of contacts (120, 140, 160, 180 and 200 pins) are available.
- For 200 pin connector, both insertion and withdrawl force are low at 134.4N and 64.7N respectively.

ORDER CODE

880□-□□□-170□□-F

① ② ③ ④ ⑤ ⑥

*Please order in multiples of the quantity per package.

①	【Type】 Receptacle **8806 :** With flanges and without hooks **8807 :** Without flanges and with hooks
②	【Number of contacts】 **120 :** 120pin **140 :** 140pin **160 :** 160pin **180 :** 180pin **200 :** 200pin
③	【Contact name】 **170**
④	【Contact tail style】 **S :** Straight **L :** Right angle
⑤	【Plating of contact area】 **Omit :** Au 0.05 μ m (Standard) **D :** Au 0.25 μ m(Upon request)
⑥	【RoHS】 **F :** RoHS Compliant

If you would like semi-customized products, please contact your local KEL sales office.

ORDER CODE

881□-□□□-170□□-F

① ② ③ ④ ⑤ ⑥

*Please order in multiples of the quantity per package.

①	【Type】 Plug **8816 :** With flanges and without hooks **8817 :** Without flanges and with hooks
②	【Number of contacts】 **120 :** 120pin **140 :** 140pin **160 :** 160pin **180 :** 180pin **200 :** 200pin
③	【Contact name】 **170**
④	【Contact tail style】 **S :** Straight **L :** Right angle
⑤	【Plating of contact area】 **Omit :** Au 0.05 μ m (Standard) **D :** Au 0.25 μ m(Upon request)
⑥	【RoHS】 **F :** RoHS Compliant

If you would like semi-customized products, please contact your local KEL sales office.

SPECIFICATIONS

Material and plating	
Insulator material	Glass-filled Nylon 66 (UL94V-0),Black
Contact material	Copper alloy
Contact plating	(Contact area) Gold over Nickel (Terminal area) Tin copper over Nickel
Retention clip material	Copper alloy
Retention clip plating	Tin copper over Nickel

Electrical Characteristics	
Current rating	0.5A per contact
Contact resistance	25mΩ max.
Dielectric withstanding voltage	650V AC for 1 minute
Insulation resistance	1,000MΩ min. at 500V DC
Operating temperature	-55°C to +85°C

*The flexing of boards in vertical and stacked mating can occur. Boards must be reinforced sufficiently to prevent gaps from occurring between mated connectors, such gaps can occur near the center of a mated pair of long connectors and can effect connector reliability.
Please take measures to address this and contact your local KEL sales office for more information.

B.C.E. S.r.l. Via Regina Pacis, 54/c - I 41049 Sassuolo (MO) Tel.: (+39) 0536 811616 - Fax.: (+39) 0536 811500 e-mail: bce@bce.it - Website: www.bce.it

Mating Drawing

Unit : mm(inch)

◆Horizontal Mating

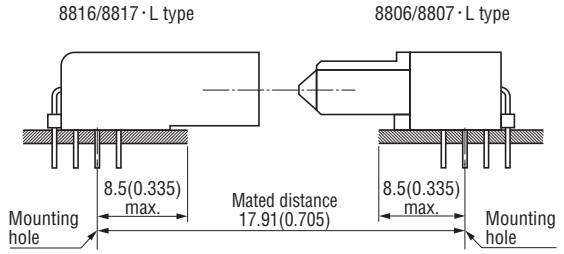

◆Stacked Mating

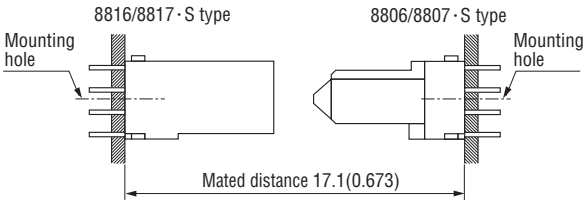

◆Vertical Mating

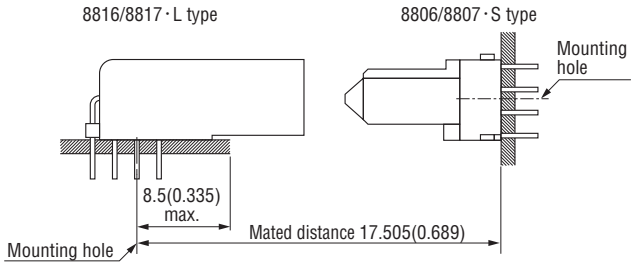

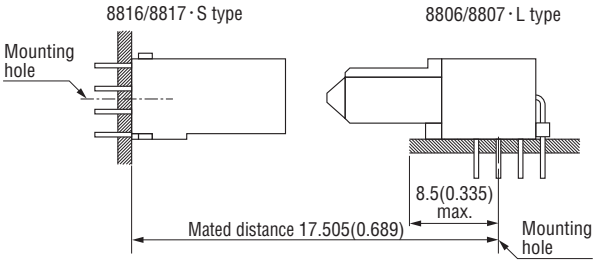

8806-□□□-170S□-F (Receptacle, With flanges, Straight)

Unit : mm(inch)

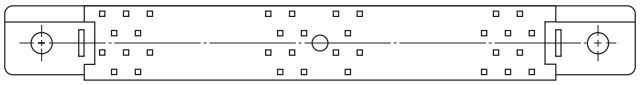

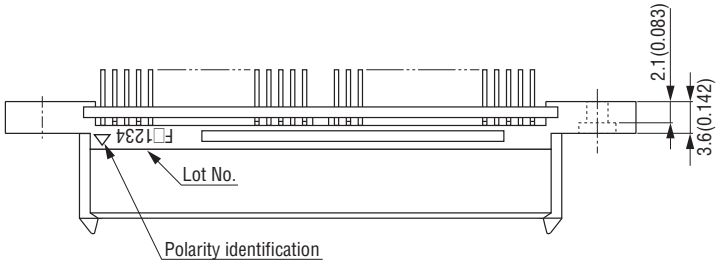

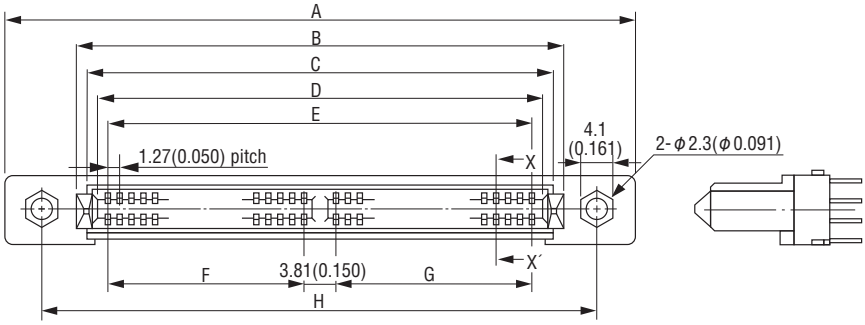

Printed Circuit Board Layout (Component Side View)

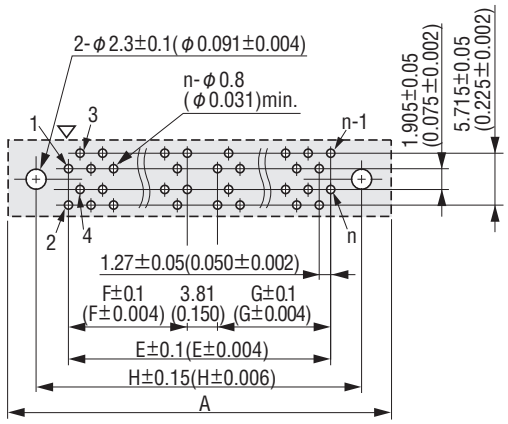

Recommended PCB Thickness $t = 1.6^{+0.2}_{-0.1}$ $(0.063^{+0.008}_{-0.004})$

▽=Polarity identification "n" is number of contacts.

X-X′Cross Section

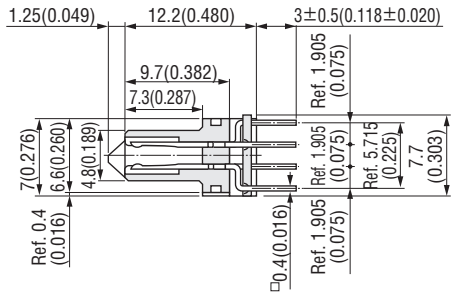

Packing style
Pipe

Product Table / Dimensions

No. of contact	Part Number	A	B	C	D	E	F	G	H	Number of packaging
120	8806-120-170S□-F	99.2 (3.906)	84.1 (3.311)	81.47 (3.207)	79.47 (3.129)	77.47 (3.050)	24.13 (0.950)	49.53 (1.950)	91.44 (3.600)	5
140	8806-140-170S□-F	111.9 (4.406)	96.8 (3.811)	94.17 (3.707)	92.17 (3.629)	90.17 (3.550)	24.13 (0.950)	62.23 (2.450)	104.14 (4.100)	4
160	8806-160-170S□-F	124.6 (4.906)	109.5 (4.311)	106.87 (4.207)	104.87 (4.129)	102.87 (4.050)	36.83 (1.450)	62.23 (2.450)	116.84 (4.600)	4
180	8806-180-170S□-F	137.3 (5.406)	122.2 (4.811)	119.57 (4.707)	117.57 (4.629)	115.57 (4.550)	49.53 (1.950)	62.23 (2.450)	129.54 (5.100)	3
200	8806-200-170S□-F	150.0 (5.906)	134.9 (5.311)	132.27 (5.207)	130.27 (5.129)	128.27 (5.050)	62.23 (2.450)	62.23 (2.450)	142.24 (5.600)	3

These connectors do not have a symmetrical board layout pattern. The 120 pin connectors have 80 pins on one side and 40 pins on the other. All other pin counts have 100 pins on one side and the balance on the other side.

8807-□□□-170S□-F (Receptacle, Without flanges, With hooks, Straight)

Unit : mm(inch)

Printed Circuit Board Layout (Component Side View)

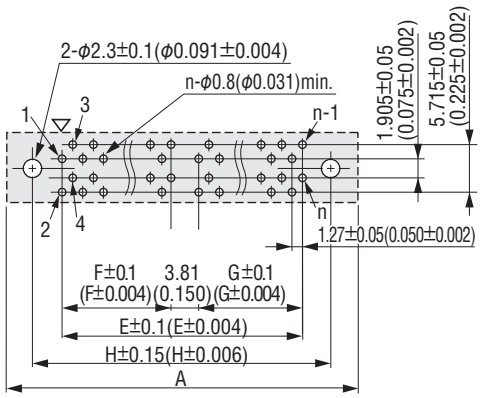

Recommended PCB Thickness $t = 1.6^{+0.2}_{-0.1}$ ($0.063^{+0.008}_{-0.004}$)

▽=Polarity identification "n" is number of contacts.

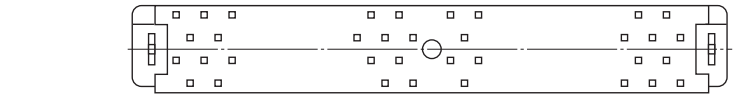

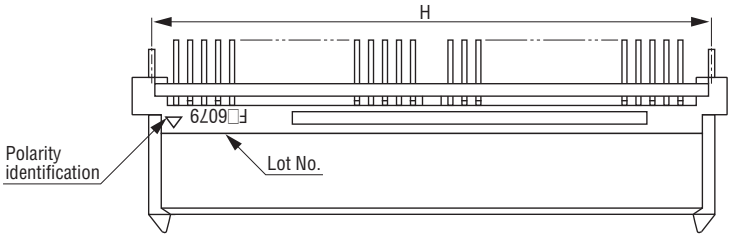

X-X′Cross Section

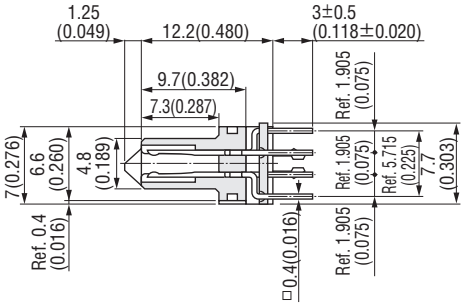

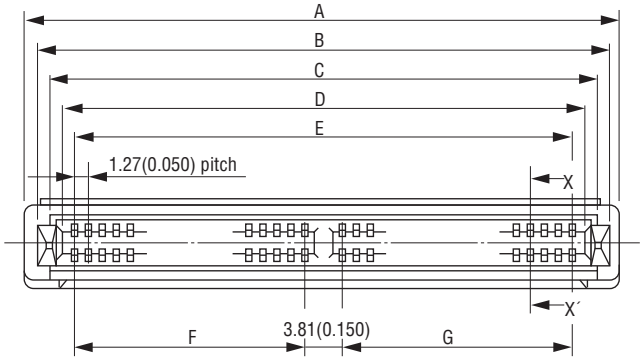

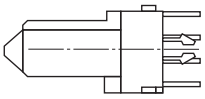

Packing style
Pipe

Product Table / Dimensions

No. of contact	Part Number	A	B	C	D	E	F	G	H	Number of packaging
120	8807-120-170S□-F	86.5 (3.406)	84.1 (3.311)	81.47 (3.207)	79.47 (3.129)	77.47 (3.050)	24.13 (0.950)	49.53 (1.950)	83.82 (3.300)	5
140	8807-140-170S□-F	99.2 (3.906)	96.8 (3.811)	94.17 (3.707)	92.17 (3.629)	90.17 (3.550)	24.13 (0.950)	62.23 (2.450)	96.52 (3.800)	5
160	8807-160-170S□-F	111.9 (4.406)	109.5 (4.311)	106.87 (4.207)	104.87 (4.129)	102.87 (4.050)	36.83 (1.450)	62.23 (2.450)	109.22 (4.300)	4
180	8807-180-170S□-F	124.6 (4.906)	122.2 (4.811)	119.57 (4.707)	117.57 (4.629)	115.57 (4.550)	49.53 (1.950)	62.23 (2.450)	121.92 (4.800)	4
200	8807-200-170S□-F	137.3 (5.406)	134.9 (5.311)	132.27 (5.207)	130.27 (5.129)	128.27 (5.050)	62.23 (2.450)	62.23 (2.450)	134.62 (5.300)	3

These connectors do not have a symmetrical board layout pattern. The 120 pin connectors have 80 pins on one side and 40 pins on the other. All other pin counts have 100 pins on one side and the balance on the other side.

B.C.E. S.r.l. Via Regina Pacis, 54/c - I 41049 Sassuolo (MO) Tel.: (+39) 0536 811616 - Fax.: (+39) 0536 811500 e-mail: bce@bce.it - Website: www.bce.it

8816-□□□-170S□-F (Plug, With flanges, Straight)

Unit : mm(inch)

Printed Circuit Board Layout (Component Side View)

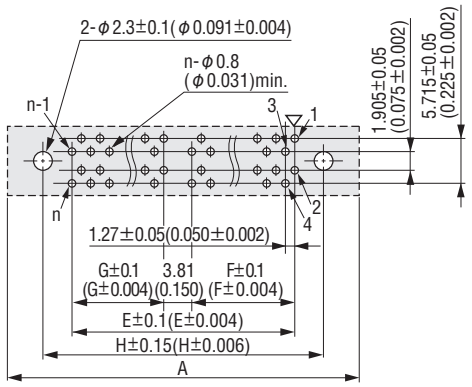

Recommended PCB Thickness $t = 1.6^{+0.2}_{-0.1}$ $(0.063^{+0.008}_{-0.004})$

▽=Polarity identification "n" is number of contacts.

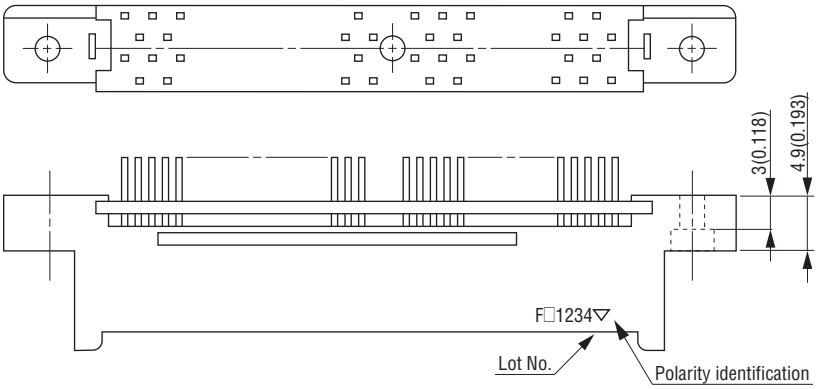

X-X′Cross Section

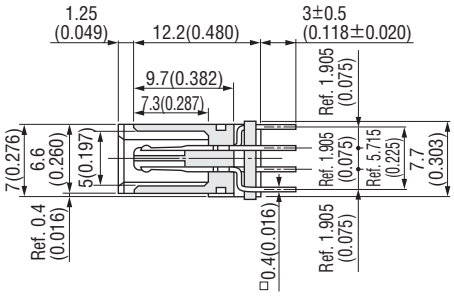

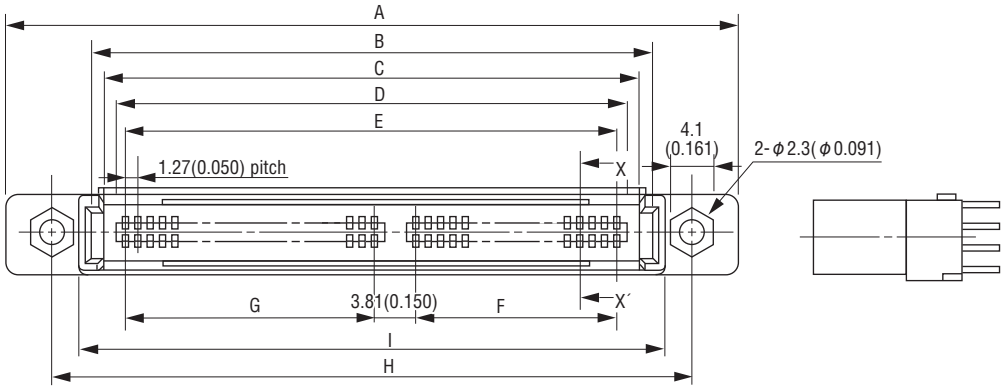

Packing style
Pipe

Product Table / Dimensions

No. of contact	Part Number	A	B	C	D	E	F	G	H	I	Number of packaging
120	8816-120-170S□-F	99.2 (3.906)	84.5 (3.327)	81.87 (3.223)	79.17 (3.117)	77.47 (3.050)	24.13 (0.950)	49.53 (1.950)	91.44 (3.600)	86.5 (3.406)	5
140	8816-140-170S□-F	111.9 (4.406)	97.2 (3.827)	94.57 (3.723)	91.87 (3.617)	90.17 (3.550)	24.13 (0.950)	62.23 (2.450)	104.14 (4.100)	99.2 (3.906)	4
160	8816-160-170S□-F	124.6 (4.906)	109.9 (4.327)	107.27 (4.223)	104.57 (4.117)	102.87 (4.050)	36.83 (1.450)	62.23 (2.450)	116.84 (4.600)	111.9 (4.406)	4
180	8816-180-170S□-F	137.3 (5.406)	122.6 (4.827)	119.97 (4.723)	117.27 (4.617)	115.57 (4.550)	49.53 (1.950)	62.23 (2.450)	129.54 (5.100)	124.6 (4.906)	3
200	8816-200-170S□-F	150.0 (5.906)	135.3 (5.327)	132.67 (5.223)	129.97 (5.117)	128.27 (5.050)	62.23 (2.450)	62.23 (2.450)	142.24 (5.600)	137.3 (5.406)	3

These connectors do not have a symmetrical board layout pattern. The 120 pin connectors have 80 pins on one side and 40 pins on the other. All other pin counts have 100 pins on one side and the balance on the other side.

B.C.E. S.r.l. Via Regina Pacis, 54/c - I 41049 Sassuolo (MO) Tel.: (+39) 0536 811616 - Fax.: (+39) 0536 811500 e-mail: bce@bce.it - Website: www.bce.it

8817-□□□-170S□-F (Plug, Without flanges, With hooks, Straight)

Unit : mm(inch)

Printed Circuit Board Layout (Component Side View)

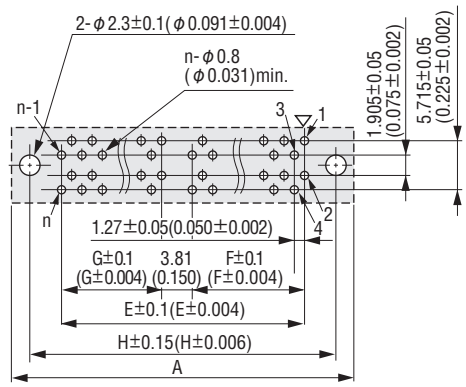

Recommended PCB Thickness $t = 1.6^{+0.2}_{-0.1}$ $(0.063^{+0.008}_{-0.004})$

▽=Polarity identification "n" is number of contacts.

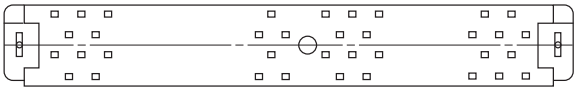

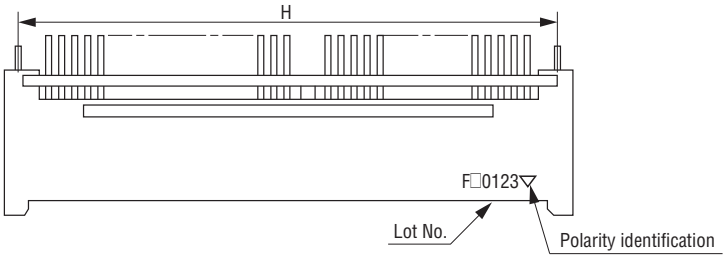

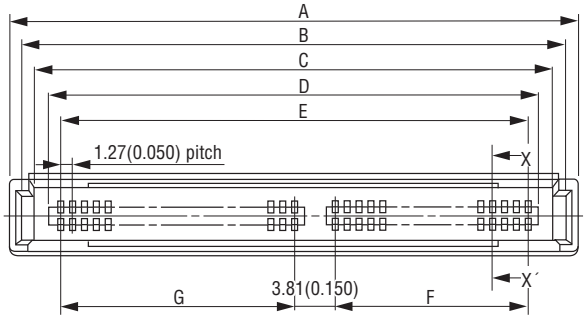

For 160, 180, 200 pins

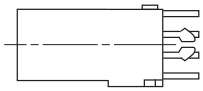

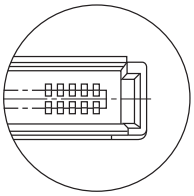

For 120, 140 pins

X-X′Cross Section

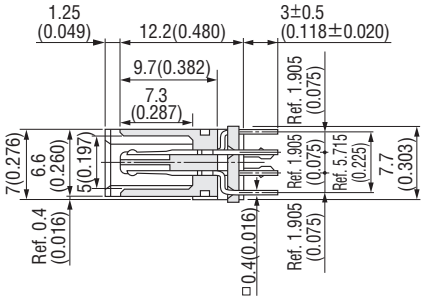

Packing style
Pipe

Product Table / Dimensions

No. of contact	Part Number	A	B	C	D	E	F	G	H	Number of packaging
120	8817-120-170S□-F	86.5 (3.406)	84.5 (3.327)	81.87 (3.223)	79.17 (3.117)	77.47 (3.050)	24.13 (0.950)	49.53 (1.950)	83.82 (3.300)	5
140	8817-140-170S□-F	99.2 (3.906)	97.2 (3.827)	94.57 (3.723)	91.87 (3.617)	90.17 (3.550)	24.13 (0.950)	62.23 (2.450)	96.52 (3.800)	5
160	8817-160-170S□-F	111.9 (4.406)	109.9 (4.327)	107.27 (4.223)	104.57 (4.117)	102.87 (4.050)	36.83 (1.450)	62.23 (2.450)	109.22 (4.300)	4
180	8817-180-170S□-F	124.6 (4.906)	122.6 (4.827)	119.97 (4.723)	117.27 (4.617)	115.57 (4.550)	49.53 (1.950)	62.23 (2.450)	121.92 (4.800)	4
200	8817-200-170S□-F	137.3 (5.406)	135.3 (5.327	132.67 (5.223)	129.97 (5.117)	128.27 (5.050)	62.23 (2.450)	62.23 (2.450)	134.62 (5.300)	3

These connectors do not have a symmetrical board layout pattern. The 120 pin connectors have 80 pins on one side and 40 pins on the other. All other pin counts have 100 pins on one side and the balance on the other side.

8806-□□□-170L□-F (Receptacle, With flanges, Right angle)

Unit : mm(inch)

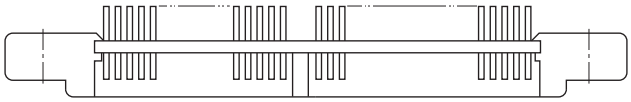

Printed Circuit Board Layout (Component Side View)

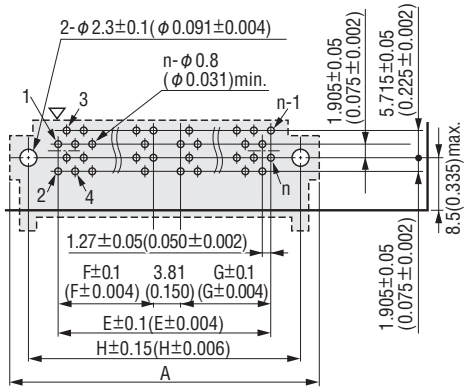

Recommended PCB Thickness $t = 1.6^{+0.2}_{-0.1}$ $(0.063^{+0.008}_{-0.004})$

▽=Polarity identification "n" is number of contacts.

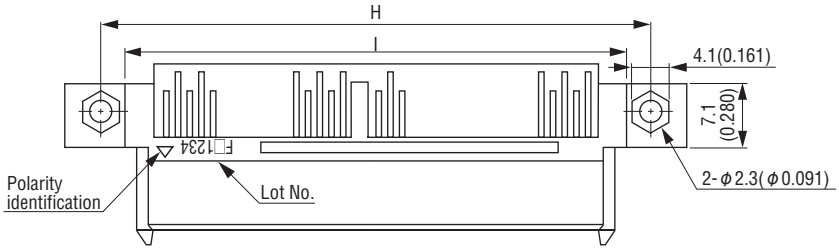

X-X′Cross Section

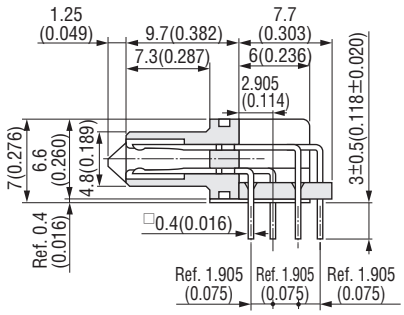

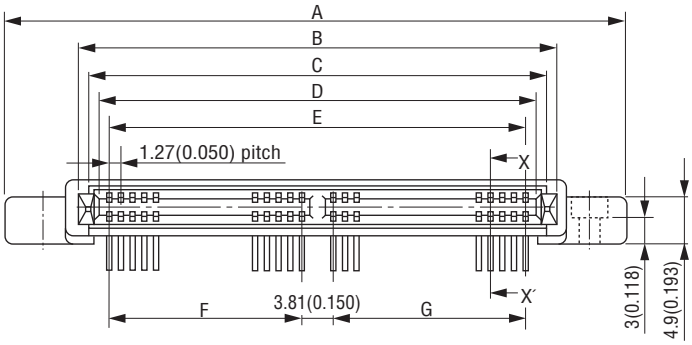

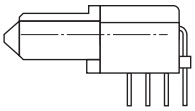

Packing style
Pipe

Product Table / Dimensions

No. of contact	Part Number	A	B	C	D	E	F	G	H	I	Number of packaging
120	8806-120-170L□-F	99.2 (3.906)	84.1 (3.311)	81.47 (3.207)	79.47 (3.129)	77.47 (3.050)	24.13 (0.950)	49.53 (1.950)	91.44 (3.600)	86.5 (3.406)	5
140	8806-140-170L□-F	111.9 (4.406)	96.8 (3.811)	94.17 (3.707)	92.17 (3.629)	90.17 (3.550)	24.13 (0.950)	62.23 (2.450)	104.14 (4.100)	99.2 (3.906)	4
160	8806-160-170L□-F	124.6 (4.906)	109.5 (4.311)	106.87 (4.207)	104.87 (4.129)	102.87 (4.050)	36.83 (1.450)	62.23 (2.450)	116.84 (4.600)	111.9 (4.406)	4
180	8806-180-170L□-F	137.3 (5.406)	122.2 (4.811)	119.57 (4.707)	117.57 (4.629)	115.57 (4.550)	49.53 (1.950)	62.23 (2.450)	129.54 (5.100)	124.6 (4.906)	3
200	8806-200-170L□-F	150.0 (5.906)	134.9 (5.311)	132.27 (5.207)	130.27 (5.129)	128.27 (5.050)	62.23 (2.450)	62.23 (2.450)	142.24 (5.600)	137.3 (5.406)	3

These connectors do not have a symmetrical board layout pattern. The 120 pin connectors have 80 pins on one side and 40 pins on the other. All other pin counts have 100 pins on one side and the balance on the other side.

B.C.E. S.r.l. Via Regina Pacis, 54/c - I 41049 Sassuolo (MO) Tel.: (+39) 0536 811616 - Fax.: (+39) 0536 811500 e-mail: bce@bce.it - Website: www.bce.it

8807-□□□-170L□-F (Receptacle, Without flanges, With hooks, Right angle)

Unit : mm(inch)

Printed Circuit Board Layout (Component Side View)

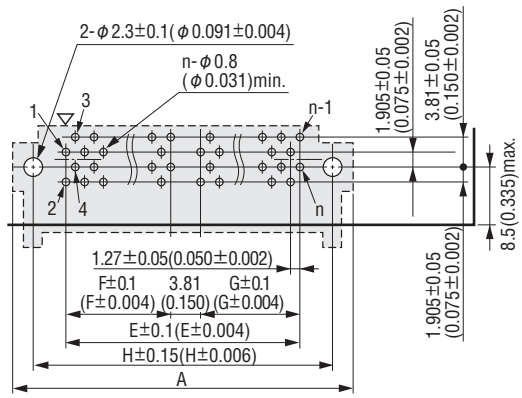

Recommended PCB Thickness $t = 1.6^{+0.2}_{-0.1}$ $(0.063^{+0.008}_{-0.004})$

▽=Polarity identification "n" is number of contacts.

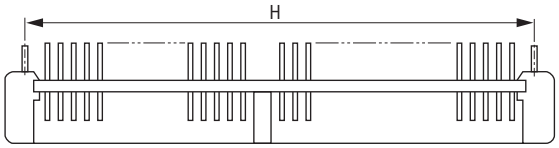

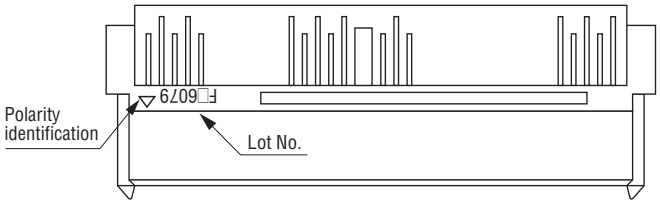

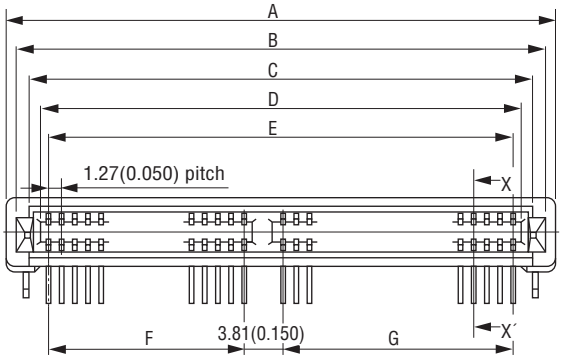

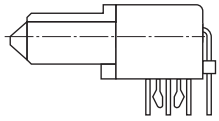

X-X′Cross Section

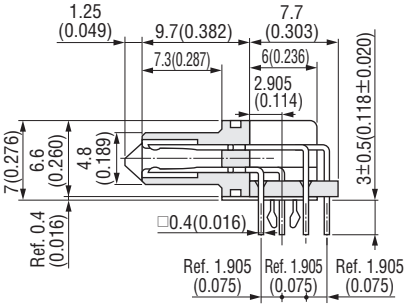

Packing style
Pipe

Product Table / Dimensions

No. of contact	Part Number	A	B	C	D	E	F	G	H	Number of packaging
120	8807-120-170L□-F	86.5 (3.406)	84.1 (3.311)	81.47 (3.207)	79.47 (3.129)	77.47 (3.050)	24.13 (0.950)	49.53 (1.950)	83.82 (3.300)	5
140	8807-140-170L□-F	99.2 (3.906)	96.8 (3.811)	94.17 (3.707)	92.17 (3.629)	90.17 (3.550)	24.13 (0.950)	62.23 (2.450)	96.52 (3.800)	5
160	8807-160-170L□-F	111.9 (4.406)	109.5 (4.311)	106.87 (4.207)	104.87 (4.129)	102.87 (4.050)	36.83 (1.450)	62.23 (2.450)	109.22 (4.300)	4
180	8807-180-170L□-F	124.6 (4.906)	122.2 (4.811)	119.57 (4.707)	117.57 (4.629)	115.57 (4.550)	49.53 (1.950)	62.23 (2.450)	121.92 (4.800)	3
200	8807-200-170L□-F	137.3 (5.406)	134.9 (5.311)	132.27 (5.207)	130.27 (5.129)	128.27 (5.050)	62.23 (2.450)	62.23 (2.450)	134.62 (5.300)	3

These connectors do not have a symmetrical board layout pattern. The 120 pin connectors have 80 pins on one side and 40 pins on the other. All other pin counts have 100 pins on one side and the balance on the other side.

8816-□□□-170L□-F (Plug, With flanges, Right angle)

Unit : mm(inch)

Printed Circuit Board Layout (Component Side View)

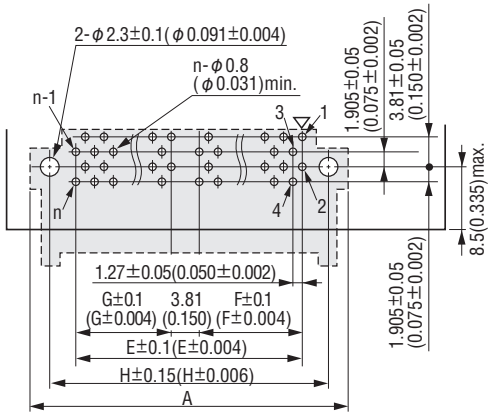

Recommended PCB Thickness $t = 1.6^{+0.2}_{-0.1}$ $(0.063^{+0.008}_{-0.004})$

▽=Polarity identification "n" is number of contacts.

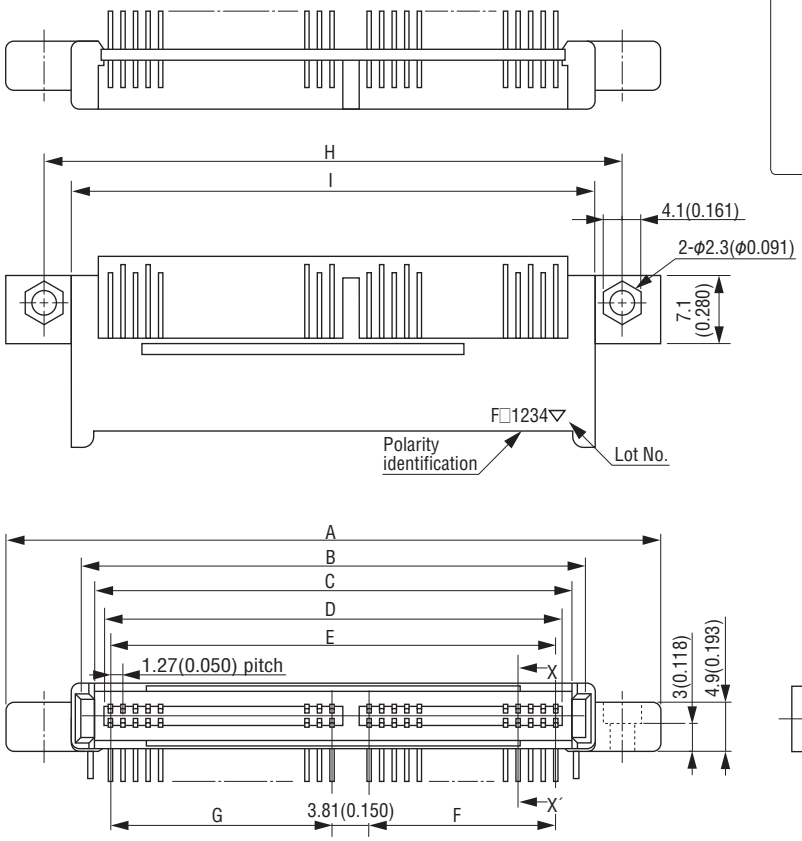

X-X′Cross Section

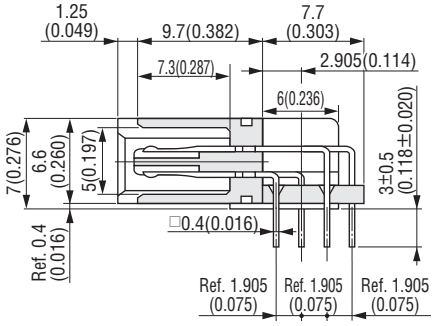

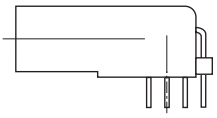

Packing style
Pipe

Product Table / Dimensions

No. of contact	Part Number	A	B	C	D	E	F	G	H	I	Number of packaging
120	8816-120-170L□-F	99.2 (3.906)	84.5 (3.327)	81.87 (3.223)	79.17 (3.117)	77.47 (3.050)	24.13 (0.950)	49.53 (1.950)	91.44 (3.600)	86.5 (3.406)	5
140	8816-140-170L□-F	111.9 (4.406)	97.2 (3.827)	94.57 (3.723)	91.87 (3.617)	90.17 (3.550)	24.13 (0.950)	62.23 (2.450)	104.14 (4.100)	99.2 (3.906)	4
160	8816-160-170L□-F	124.6 (4.906)	109.9 (4.327)	107.27 (4.223)	104.57 (4.117)	102.87 (4.050)	36.83 (1.450)	62.23 (2.450)	116.84 (4.600)	111.9 (4.406)	4
180	8816-180-170L□-F	137.3 (5.406)	122.6 (4.827)	119.97 (4.723)	117.27 (4.617)	115.57 (4.550)	49.53 (1.950)	62.23 (2.450)	129.54 (5.100)	124.6 (4.906)	3
200	8816-200-170L□-F	150.0 (5.906)	135.3 (5.327)	132.67 (5.223)	129.97 (5.117)	128.27 (5.050)	62.23 (2.450)	62.23 (2.450)	142.24 (5.600)	137.3 (5.406)	3

These connectors do not have a symmetrical board layout pattern. The 120 pin connectors have 80 pins on one side and 40 pins on the other. All other pin counts have 100 pins on one side and the balance on the other side

8817-□□□-170L□-F (Plug, Without flanges, With hooks, Right angle)

Unit : mm(inch)

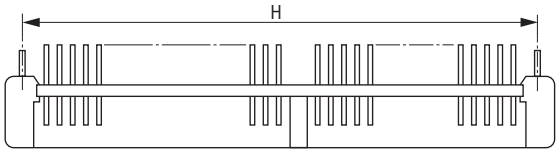

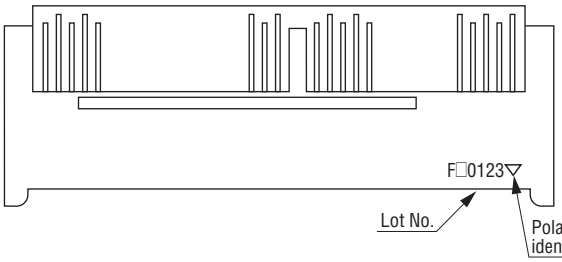

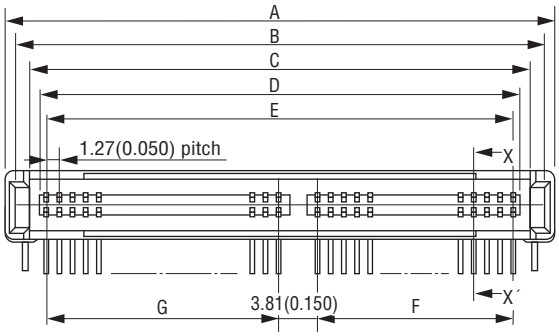

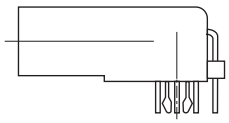

For 160, 180, 200 pins

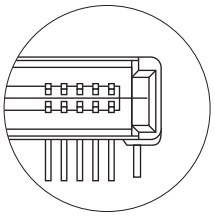

For 120, 140 pins

Printed Circuit Board Layout (Component Side View)

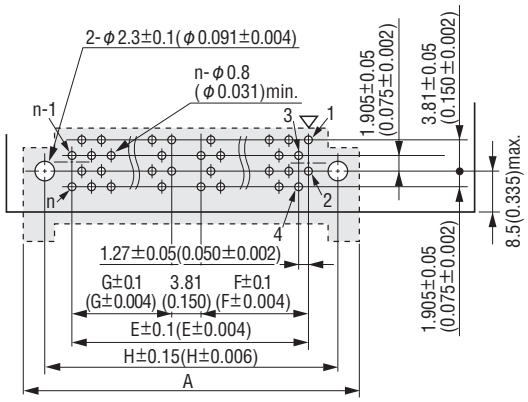

Recommended PCB Thickness $t = 1.6^{+0.2}_{-0.1}$ $(0.063^{+0.008}_{-0.004})$

▽=Polarity identification "n" is number of contacts.

X-X′Cross Section

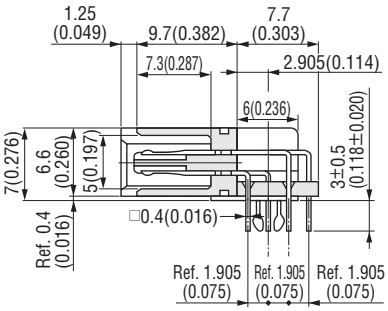

Packing style
Pipe

Product Table / Dimensions

No. of contact	Part Number	A	B	C	D	E	F	G	H	Number of packaging
120	8817-120-170L□-F	86.5 (3.406)	84.5 (3.327)	81.87 (3.223)	79.17 (3.117)	77.47 (3.050)	24.13 (0.950)	49.53 (1.950)	83.82 (3.300)	5
140	8817-140-170L□-F	99.2 (3.906)	97.2 (3.827)	94.57 (3.723)	91.87 (3.617)	90.17 (3.550)	24.13 (0.950)	62.23 (2.450)	96.52 (3.800)	5
160	8817-160-170L□-F	111.9 (4.406)	109.9 (4.327)	107.27 (4.223)	104.57 (4.117)	102.87 (4.050)	36.83 (1.450)	62.23 (2.450)	109.22 (4.300)	4
180	8817-180-170L□-F	124.6 (4.906)	122.6 (4.827)	119.97 (4.723)	117.27 (4.617)	115.57 (4.550)	49.53 (1.950)	62.23 (2.450)	121.92 (4.800)	4
200	8817-200-170L□-F	137.3 (5.406)	135.3 (5.327)	132.67 (5.223)	129.97 (5.117)	128.27 (5.050)	62.23 (2.450)	62.23 (2.450)	134.62 (5.300)	3

These connectors do not have a symmetrical board layout pattern. The 120 pin connectors have 80 pins on one side and 40 pins on the other. All other pin counts have 100 pins on one side and the balance on the other side.

B.C.E. S.r.l. Via Regina Pacis, 54/c - I 41049 Sassuolo (MO) Tel.: (+39) 0536 811616 - Fax.: (+39) 0536 811500 e-mail: bce@bce.it - Website: www.bce.it

8300／8400 SERIES

2.54mm PITCH CONNECTOR /CONFORMS TO STANDARD DIN

RoHS Compliant

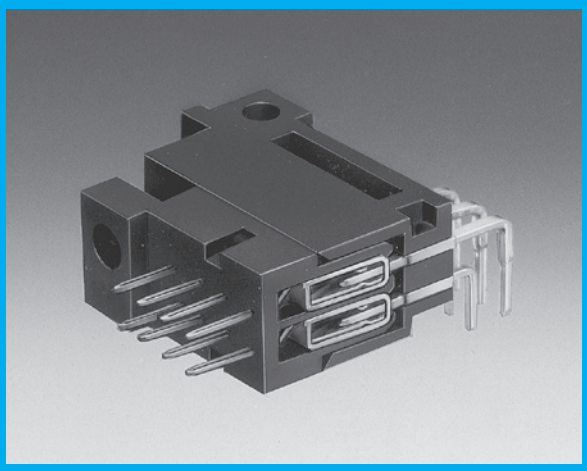

FEATURES

- A total price advantage over card edge connector.
- Mating is easy and reliable due to unique contact design.
- Numerous variations are available.
- Horizontal, Vertical and Stacked mating combinations.
- Conforms to DIN 41612 standard and IEC 603-2 standard.
- The insulator material of PBT(polybutylene terephthalate) resin has superior chemical resistance characteristics.

ORDER CODE

8□□0-□□□-28□□-□-N

① ② ③ ④ ⑤ ⑥

*Please order in multiples of the quantity per package.

① **【type】** Receptacle **8300 :** Standard DIN **8400 :** Inverse DIN **8330 :** Standard DIN (VA product) **8440 :** Inverse DIN (VA Product), Flush mounting

② **【Number of contacts】** (8300) **032 :** 32pin **048 :** 48pin **050 :** 50pin **064 :** 64pin **096 :** 96pin (8400) **064 :** 64pin **096 :** 96pin
(8330／8440) **032 :** 32pin **044 :** 44pin **048 :** 48pin **050 :** 50pin **064 :** 64pin **090 :** 90pin **096 :** 096pin **100 :** 100pin

③ **【Contact name】** (8300) **280 :** straight, Wire wrap **281 :** straight, DIP solder (8400) **282 :** Right angle, DIP solder
(8330) **283 :** Straight, DIP solder (8440) **284 :** Right angle, DIP solder

④ **【Plating contact area】** (8300／8400) **Omit :** 0.2 μm (Standard)
(8330／8440) **Omit :** 0.05 μ m (Standard) **F :** 0.2 μ m (Upon request) **A :** 0.3 μ m(Upon request)

⑤ **【Option】** (8330) **H :** With hooks

⑥ **【RoHS】** **N :** RoHS compliant

If you would like semi-customized products, please contact your local KEL sales office.

ORDER CODE

8□□1-□□□-29□□-□-N

① ② ③ ④ ⑤ ⑥

*Please order in multiples of the quantity per package.

① **【type】** Plug **8301 :** Standard DIN **8311 :** Standard DIN, Flush mounting **8401 :** Inverse DIN **8331 :** Standard DIN (VA product)
8341 : Standard DIN, Flush mounting (VA product) **8431 :** Inverse DIN (VA Product)

② **【Number of contacts】** (8301／8311) **032 :** 32pin **048 :** 48pin **050 :** 50pin **064 :** 64pin **096 :** 96pin (8401) **064 :** 64pin **096 :** 96pin
(8331／8341／8431) **032 :** 32pin **044 :** 44pin **048 :** 48pin **050 :** 50pin **064 :** 64pin **090 :** 90pin **096 :** 096pin **100 :** 100pin

③ **【Contact name】** (8301／8311) **290 :** Right angle, Dip solder (8401) **292 :** Straight, DIP solder
(8331／8341) **294 :** Right angle, DIP solder (8431) **294 :** Straight, DIP solder

④ **【Plating contact area】** (8301／8311／8401) **Omit :** 0.2 μ m (Standard)
(8331／8341／8431) **Omit :** 0.05 μ m (Standard) **F :** 0.2 μ m (Upon request) **A :** 0.3 μ m(Upon request)

⑤ **【Option】** (8331／8341) **H :** With hooks

⑥ **【RoHS】** **N :** RoHS compliant

If you would like semi-customized products, please contact your local KEL sales office.

SPECIFICATIONS

Material and plating	
Insulator material	Glass-filled PBT(UL94V-0) [8400 64pin] Glass-filled PET(UL94V-0)
Contact material	Copper alloy
Contact plating	(Contact area) Gold over Nickel (Terminal area) Tin copper over Nickel

Electrical Characteristics	
Current rating	[8300/8301/8311/8400/8401] 2A per contact [8330/8331/8341/8431/8440] 1A per contact
Contact resistance	20mΩ max.
Dielectric withstanding voltage	1000V AC for 1 minute.
Insulation resistance	10^6M min. 500V DC
Insertion force	1.18N × Number of contacts max. /pair
Withdrawal force	0.15N × Number of contacts min. /pair
Individual withdrawal force	0.15N min. (with 0.56mm thickness steel gage)
Contact retention	20N min.
Operating temperature	-55°C to +85°C

Product List

Pitch	type	Plug/ Receptacle	Contact tail style	Termination	Mounting style	Number of rows	Number of contacts	Series name
2.54mm (100mil)	DIN/IEC standard (Standard type)	Plug	Right angle	DIP solder	Standard	2	32、50、64	8301
						3	48、96	
						2	32、44、50、64、90、100	8331 (VA TYPE)
						3	48、96	
					Flush mounting	2	32、50、64	8311
						3	48、96	
						2	32、44、50、64、90、100	8341 (VA TYPE)
						3	48、96	
		Receptacle	Straight	DIP solder Wire wrap	Standard	2	32、50、64	8300
						3	48、96	
				DIP solder		2	32、44、50、64、90、100	8330 (VA TYPE)
						3	48、96	
	DIN/IEC standard (Inverse type)	Plug	Straight	DIP solder	——	2	64	8401
						3	96	
						2	32、44、50、64、90、100	8431 (VA TYPE)
						3	48、96	
		Receptacle	Right angle	DIP solder	Standard	2	64	8400
						3	96	
					Flush mounting	2	32、44、50、64、90、100	8440 (VA TYPE)
						3	48、96	

8300-□□□-$^{280}_{281}$-N (Receptacle, Straight, DIP Solder/Wire Wrap, 2 rows)

Unit : mm(inch)

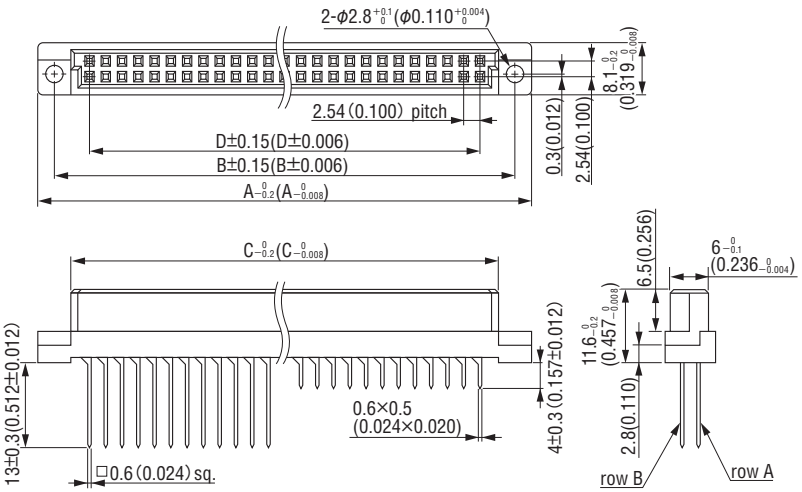

Type 280 (Wire Wrap)

Type 281 (DIP Solder)

Printed Circuit Board Layout (Component Side View)

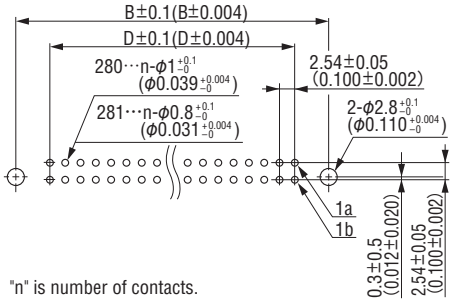

"n" is number of contacts.

Packaging style
Other

Product Table / Dimensions

No. of contacts	Part Number	A	B	C	D	Number of packaging
32	8300-032-$^{280}_{281}$-N	54.36 (2.140)	49.36 (1.943)	44.36 (1.746)	38.10 (1.500)	160
						320
50	8300-050-$^{280}_{281}$-N	77.22 (3.040)	72.22 (2.843)	67.22 (2.646)	60.96 (2.400)	110
						230
64	8300-064-$^{280}_{281}$-N	95.00 (3.740)	90.00 (3.543)	85.00 (3.346)	78.74 (3.100)	90
						180

8300-□□□-$^{280}_{281}$-N (Receptacle, Straight, DIP Solder/Wire Wrap, 3 rows)

Unit : mm(inch)

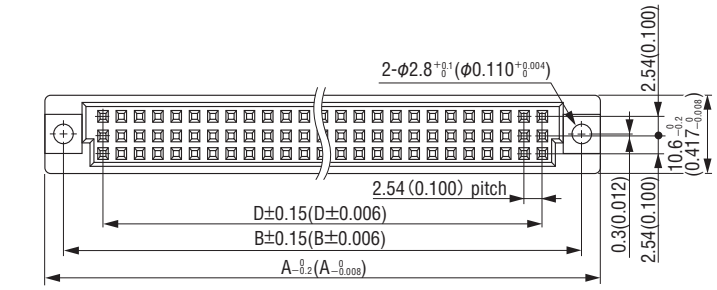

Printed Circuit Board Layout (Component Side View)

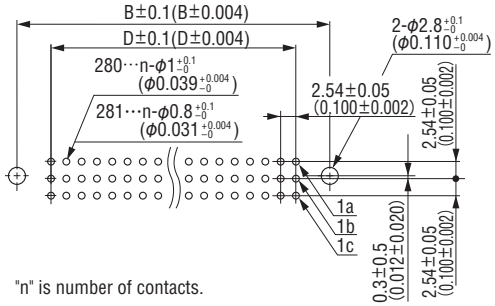

"n" is number of contacts.

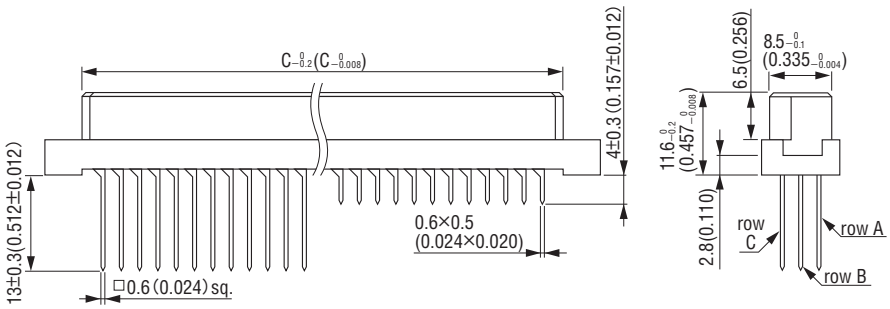

Type 280 (Wire Wrap)

Type 281 (DIP Solder)

Packaging style
Other

Product Table / Dimensions

No. of contacts	Part Number	A	B	C	D	Number of packaging
48	8300-048-$^{280}_{281}$-N	54.36 (2.140)	49.36 (1.943)	44.36 (1.746)	38.10 (1.500)	120
						240
96	8300-096-$^{280}_{281}$-N	95.00 (3.740)	90.00 (3.543)	85.00 (3.346)	78.74 (3.100)	70
						140

8400-064-282-N (Receptacle, Right angle, 2 rows)

Unit : mm(inch)

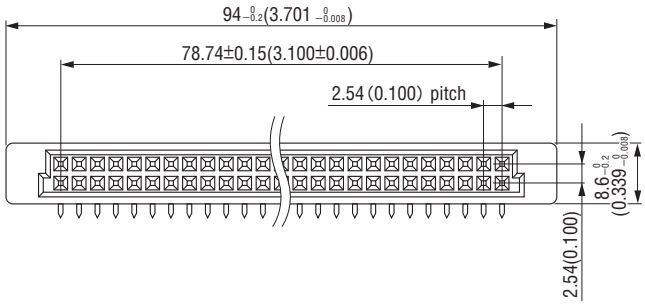

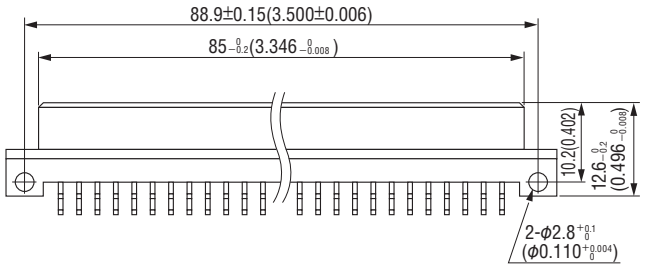

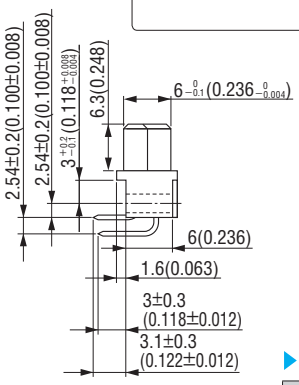

Printed Circuit Board Layout (Component Side View)

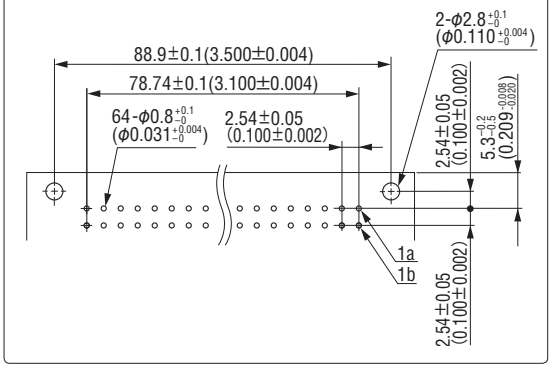

Packaging style
Other

Product Table

No. of contacts	Part Number	Number of packaging
64	8400-064-282-N	190

8400-096-282-N (Receptacle, Right angle, 3 rows)

Unit : mm(inch)

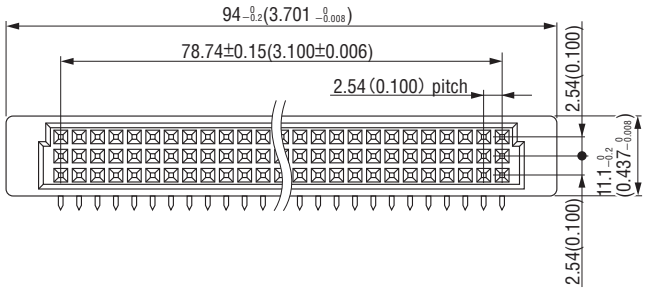

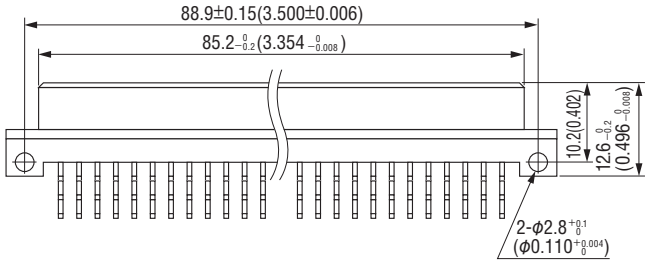

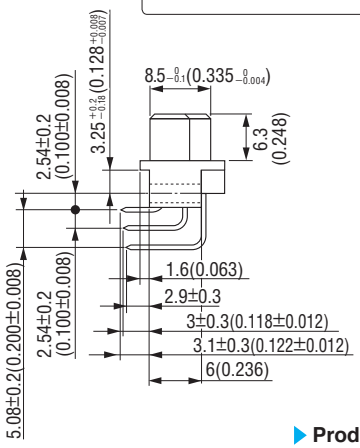

Printed Circuit Board Layout (Component Side View)

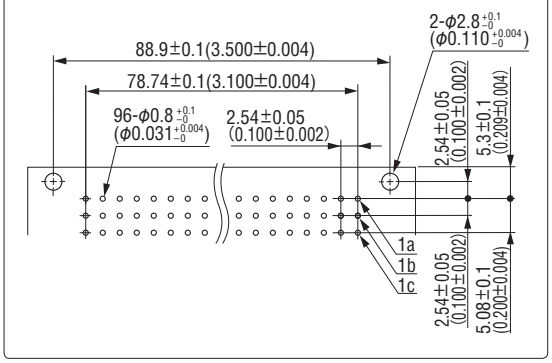

Packaging style
Other

Product Table

No. of contacts	Part Number	Number of packaging
96	8400-096-282-N	100

8330-□□□-283□-□-N (Receptacle, Straight, 2 rows)

Unit : mm(inch)

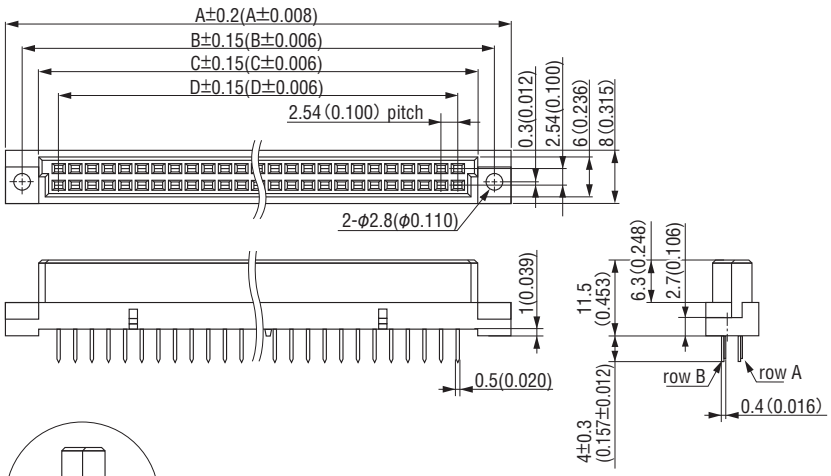

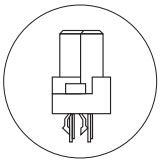

■ (Option) With hooks
Recommended PWB thickness :1.6mm(0.063'')

Printed Circuit Board Layout (Component Side View)

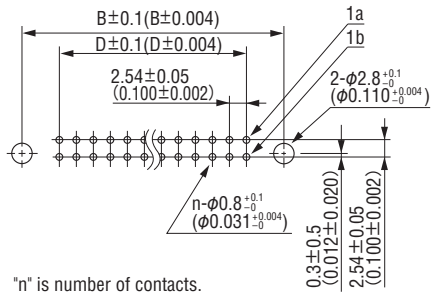

"n" is number of contacts.

Packaging style
Other

Product Table / Dimensions

No. of contacts	Part Number	A	B	C	D	Number of packaging
32	8330-032-283□-□-N	54.36 (2.140)	49.36 (1.943)	44.26 (1.743)	38.10 (1.500)	300
44	8330-044-283□-□-N	69.60 (2.740)	64.60 (2.543)	59.50 (2.343)	53.34 (2.100)	260
50	8330-050-283□-□-N	77.22 (3.040)	72.22 (2.843)	67.12 (2.643)	60.96 (2.400)	240
64	8330-064-283□-□-N	95.00 (3.740)	90.00 (3.543)	84.90 (3.343)	78.74 (3.100)	180
90	8330-090-283□-□-N	128.02 (5.040)	123.02 (4.843)	117.92 (4.643)	111.76 (4.400)	120
100	8330-100-283□-□-N	140.72 (5.540)	135.72 (5.343)	130.62 (5.143)	124.46 (4.900)	60

8330-□□□-283□-□-N (Receptacle, Straight, 3 rows)

Unit : mm(inch)

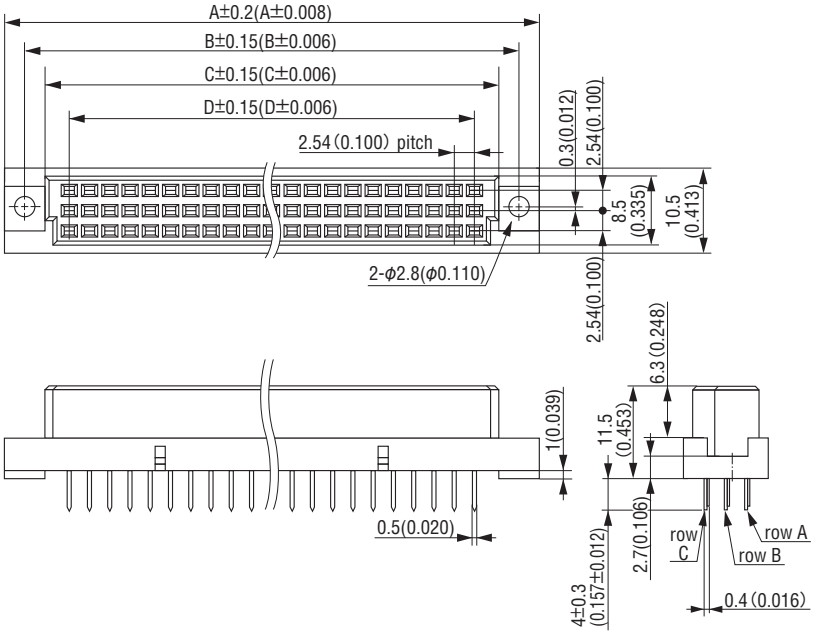

Printed Circuit Board Layout (Component Side View)

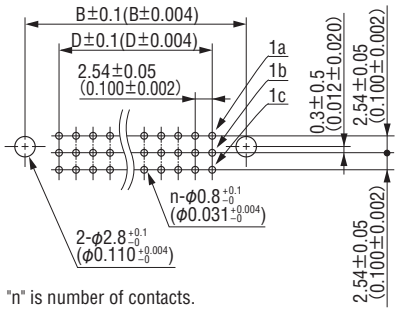

"n" is number of contacts.

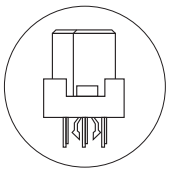

■ (Option) With hooks
Recommended PWB thickness :1.6mm(0.063'')

Packaging style
Other

Product Table / Dimensions

No. of contacts	Part Number	A	B	C	D	Number of packaging
48	8330-048-283□-□-N	54.36 (2.140)	49.36 (1.943)	44.26 (1.743)	38.10 (1.500)	240
96	8330-096-283□-□-N	95.00 (3.740)	90.00 (3.543)	84.90 (3.343)	78.74 (3.100)	70

8440-□□□-284□-N (Receptacle, Right angle, Flush mounting, 2 rows)

Unit : mm(inch)

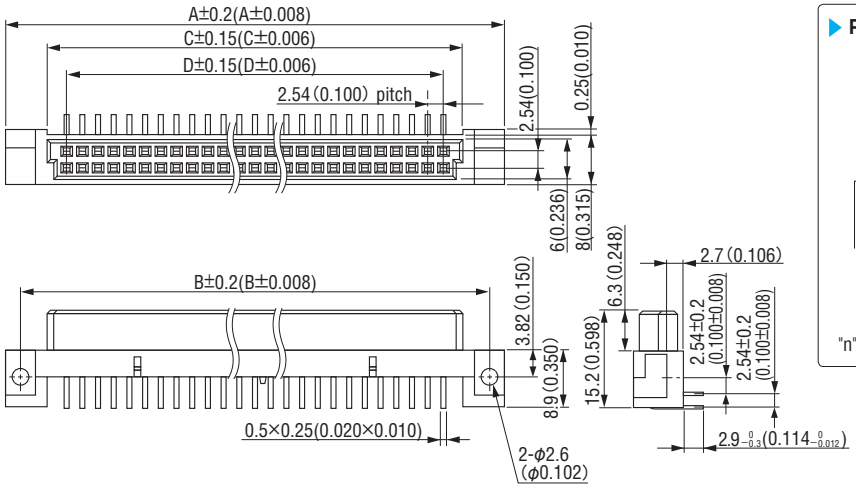

Printed Circuit Board Layout (Component Side View)

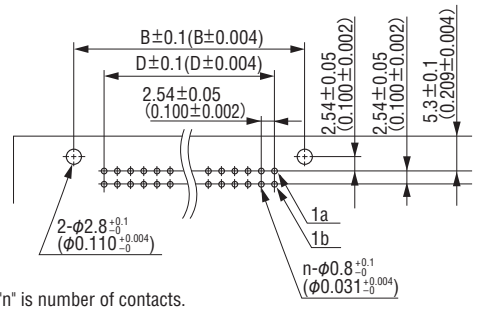

Packaging style
Other

Product Table / Dimensions

No. of contacts	Part Number	A	B	C	D	Number of packaging
32	8440-032-284□-N	58.34 (2.297)	53.34 (2.100)	44.26 (1.743)	38.10 (1.500)	300
44	8440-044-284□-N	73.58 (2.897)	68.58 (2.700)	59.50 (2.343)	53.34 (2.100)	225
50	8440-050-284□-N	81.20 (3.197)	76.20 (3.000)	67.12 (2.643)	60.96 (2.400)	225
64	8440-064-284□-N	98.98 (3.897)	93.98 (3.700)	84.90 (3.343)	78.74 (3.100)	170
90	8440-090-284□-N	132.00 (5.197)	127.00 (5.000)	117.92 (4.643)	111.76 (4.400)	110
100	8440-100-284□-N	144.70 (5.697)	139.70 (5.500)	130.62 (5.143)	124.46 (4.900)	115

8440-□□□-284□-N (Receptacle, Right angle, Flush mounting, 3 rows)

Unit : mm(inch)

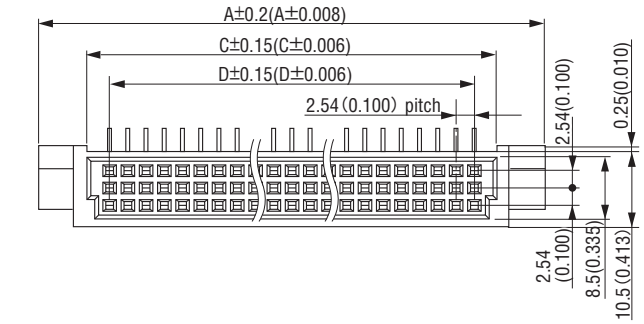

Printed Circuit Board Layout (Component Side View)

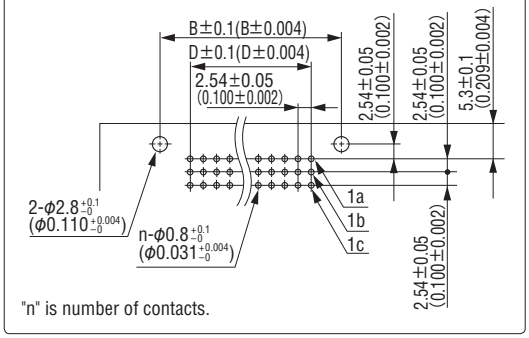

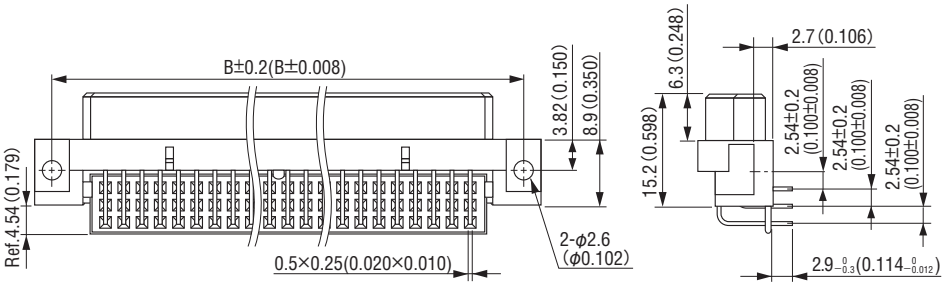

Packaging style
Other

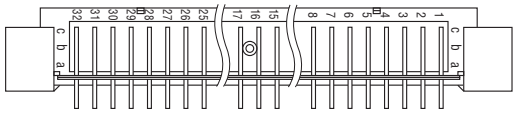

Product Table / Dimensions

No. of contacts	Part Number	A	B	C	D	Number of packaging
48	8440-048-284□-N	58.34 (2.297)	53.34 (2.100)	44.26 (1.743)	38.10 (1.500)	165
96	8440-096-284□-N	98.98 (3.897)	93.98 (3.700)	84.90 (3.343)	78.74 (3.100)	95

8301-□□□-290-N (Plug, Right angle, 2 rows)

Unit : mm(inch)

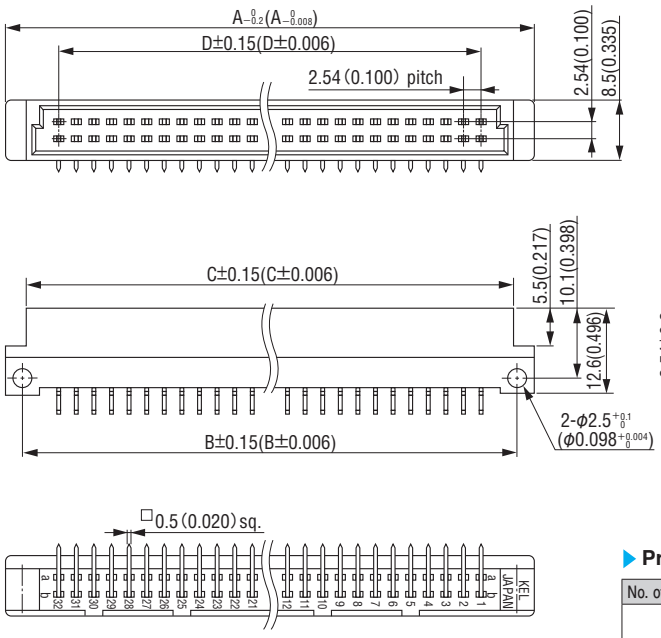

"n" is number of contacts.

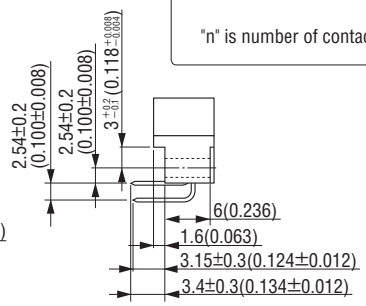

Printed Circuit Board Layout (Component Side View)

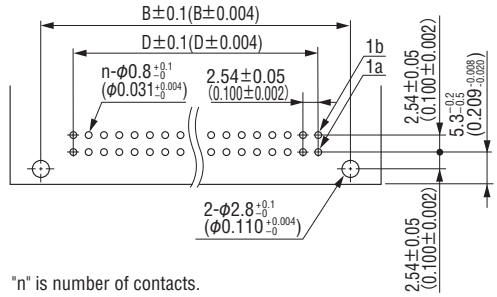

"n" is number of contacts.

Packaging style
Other

Product Table / Dimensions

No. of contacts	Part Number	A	B	C	D	Number of packaging
32	8301-032-290-N	53.26 (2.097)	48.26 (1.900)	46.86 (1.845)	38.10 (1.500)	280
50	8301-050-290-N	76.12 (2.997)	71.12 (2.800)	69.72 (2.745)	60.96 (2.400)	210
64	8301-064-290-N	93.90 (3.697)	88.90 (3.500)	87.50 (3.445)	78.74 (3.100)	165

8301-□□□-290-N (Plug, Right angle, 3 rows)

Unit : mm(inch)

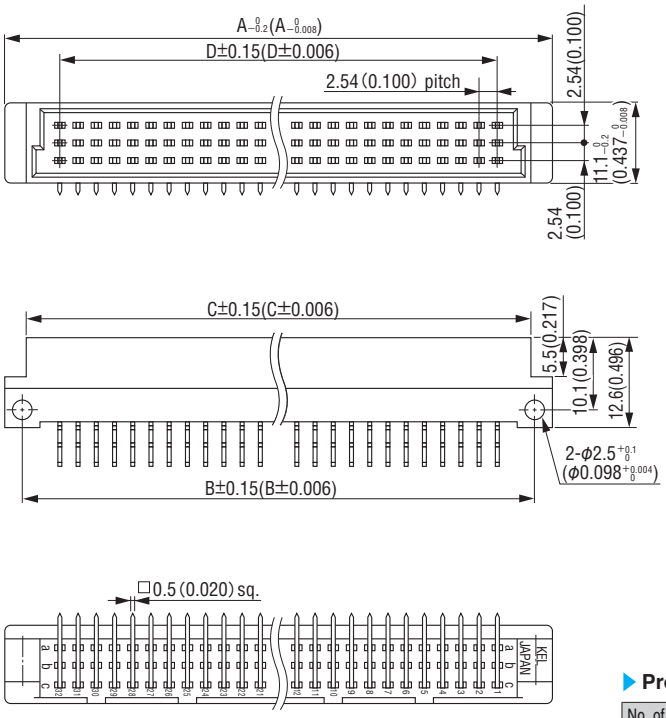

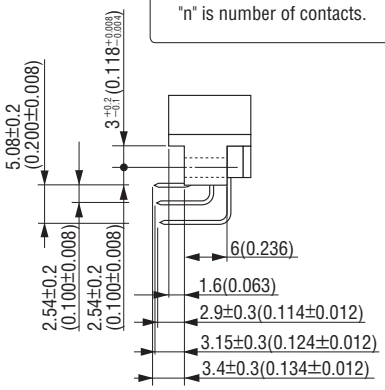

Printed Circuit Board Layout (Component Side View)

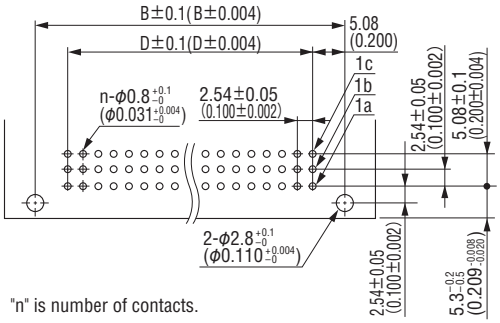

"n" is number of contacts.

Packaging style
Other

Product Table / Dimensions

No. of contacts	Part Number	A	B	C	D	Number of packaging
48	8301-048-290-N	53.26 (2.097)	48.26 (1.900)	46.86 (1.845)	38.10 (1.500)	180
96	8301-096-290-N	93.90 (3.697)	88.90 (3.500)	87.50 (3.445)	78.74 (3.100)	90

8311-□□□-290-N (Plug, Right angle, Flush mounting, 2 rows)

Unit : mm(inch)

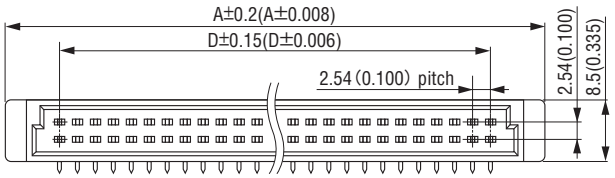

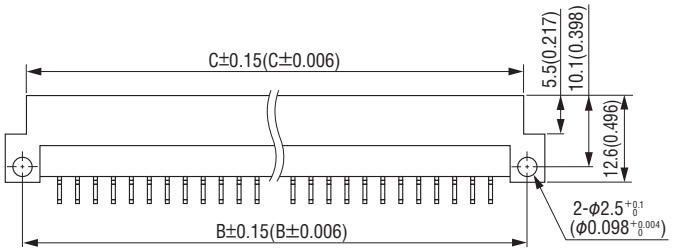

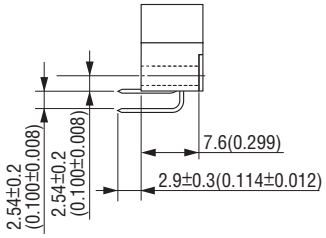

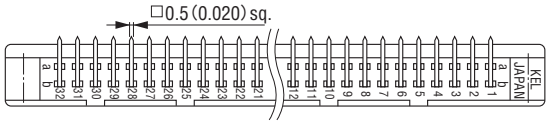

Printed Circuit Board Layout (Component Side View)

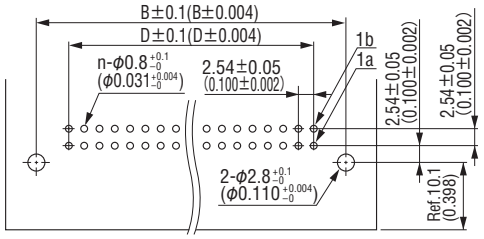

"n" is number of contacts.

Packaging style
Other

Product Table / Dimensions

No. of contacts	Part Number	A	B	C	D	Number of packaging
32	8311-032-290-N	53.26 (2.097)	48.26 (1.900)	46.86 (1.845)	38.10 (1.500)	280
50	8311-050-290-N	76.12 (2.997)	71.12 (2.800)	69.72 (2.745)	60.96 (2.400)	210
64	8311-064-290-N	93.90 (3.697)	88.90 (3.500)	87.50 (3.445)	78.74 (3.100)	165

8311-□□□-290-N (Plug, Right angle, Flush mounting, 3 rows)

Unit : mm(inch)

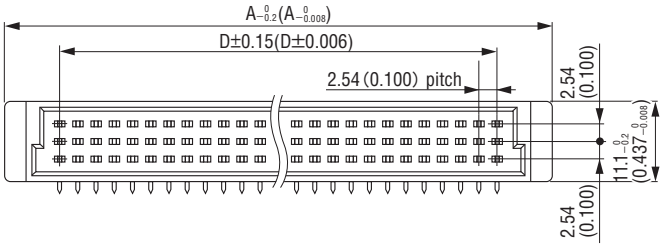

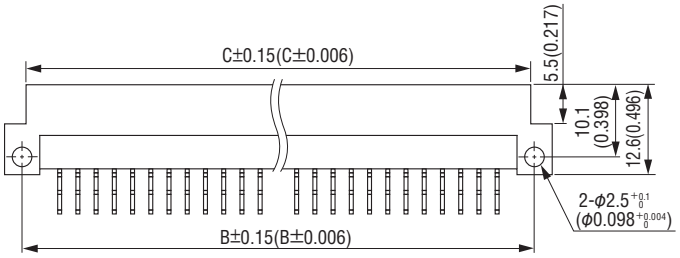

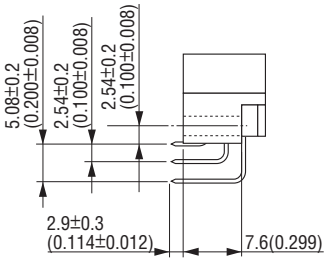

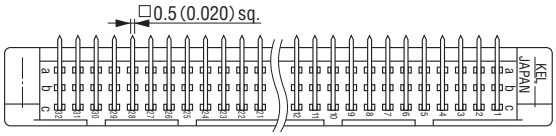

Printed Circuit Board Layout (Component Side View)

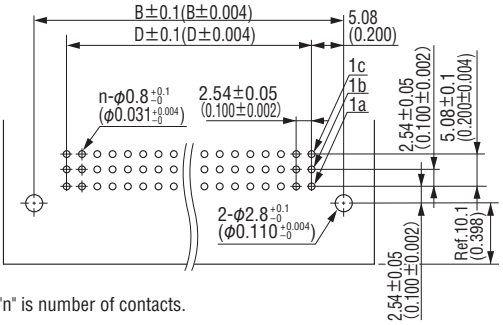

"n" is number of contacts.

Packaging style
Other

Product Table / Dimensions

No. of contacts	Part Number	A	B	C	D	Number of packaging
48	8311-048-290-N	53.26 (2.097)	48.26 (1.900)	46.86 (1.845)	38.10 (1.500)	180
96	8311-096-290-N	93.90 (3.697)	88.90 (3.500)	87.50 (3.445)	78.74 (3.100)	90

B.C.E. S.r.l. Via Regina Pacis, 54/c - I 41049 Sassuolo (MO) Tel.: (+39) 0536 811616 - Fax.: (+39) 0536 811500 e-mail: bce@bce.it - Website: www.bce.it

8401-064-292-N (Plug, Straight, 2 rows)

Unit : mm(inch)

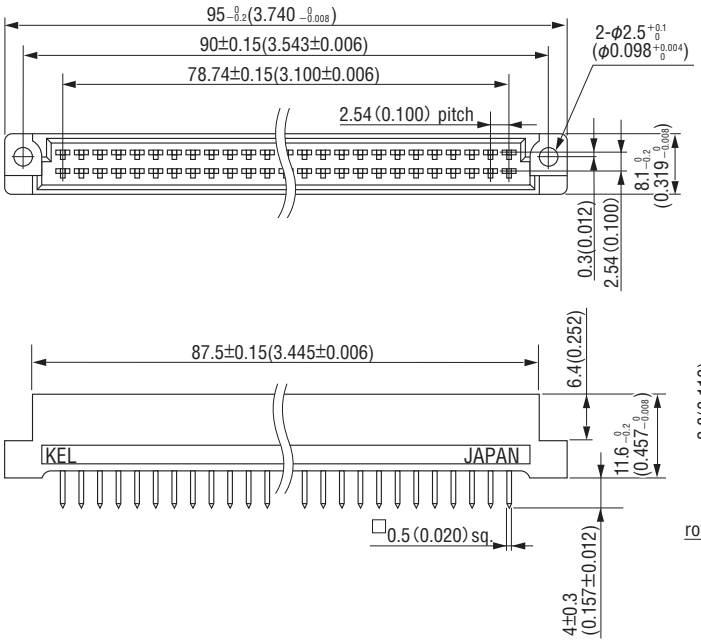

Printed Circuit Board Layout (Component Side View)

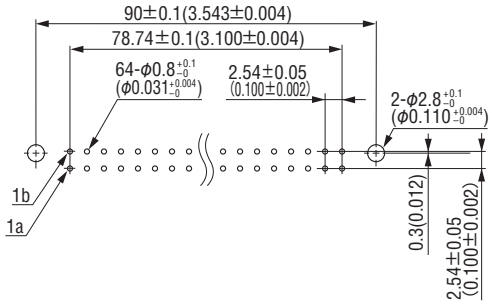

Packaging style
Other

Product Table

No. of contacts	Part Number	Number of packaging
64	8401-064-292-N	180

8401-096-292-N (Plug, Straight, 3 rows)

Unit : mm(inch)

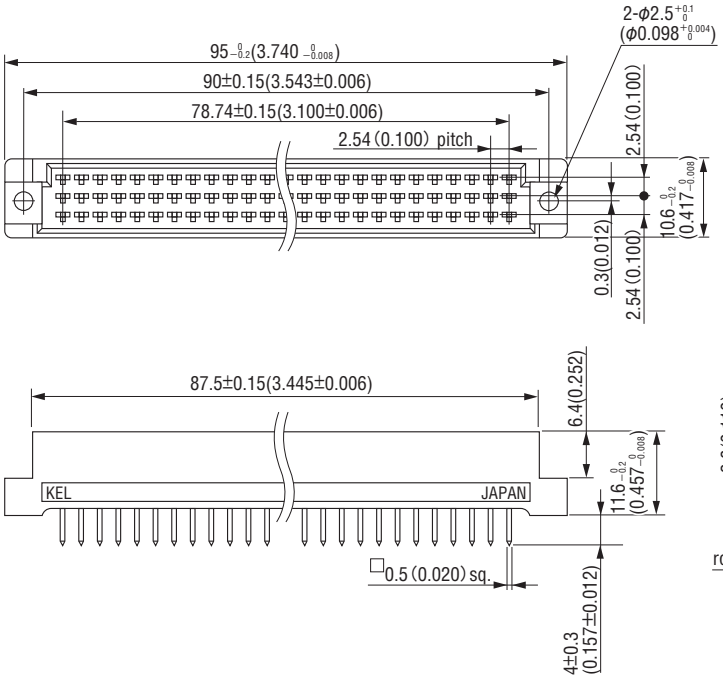

Printed Circuit Board Layout (Component Side View)

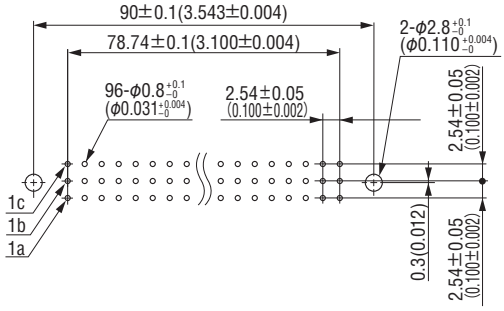

Packaging style
Other

Product Table

No. of contacts	Part Number	Number of packaging
96	8401-096-292-N	140

8331-□□□-294□-□-N (Plug, Right angle, 2 rows)

Unit : mm(inch)

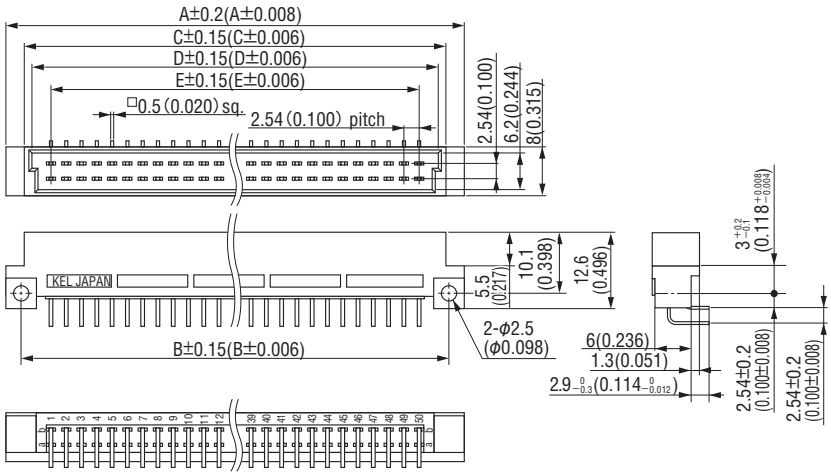

Printed Circuit Board Layout (Component Side View)

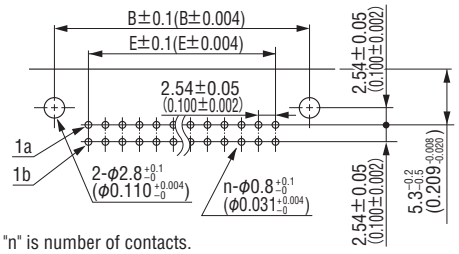

"n" is number of contacts.

Packaging style
Other

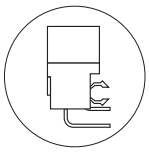

■ (Option) With hooks
Recommended PWB
thickness :1.6mm (0.063'')

Product Table / Dimensions

No. of contacts	Part Number	A	B	C	D	E	Number of packaging
32	8331-032-294□-□-N	53.26 (2.097)	48.26 (1.900)	46.86 (1.845)	38.10 (1.500)	38.10 (1.500)	300
44	8331-044-294□-□-N	68.50 (2.697)	63.50 (2.500)	62.10 (2.445)	59.90 (2.358)	53.34 (2.100)	260
50	8331-050-294□-□-N	76.12 (2.997)	71.12 (2.800)	69.72 (2.745)	67.52 (2.658)	60.96 (2.400)	240
64	8331-064-294□-□-N	93.90 (3.697)	88.90 (3.500)	87.50 (3.445)	85.30 (3.358)	78.74 (3.100)	180
90	8331-090-294□-□-N	126.92 (4.997)	121.92 (4.800)	120.52 (4.745)	118.32 (4.658)	111.76 (4.400)	130
100	8331-100-294□-□-N	139.62 (5.497)	134.62 (5.300)	133.22 (5.245)	131.02 (5.158)	124.46 (4.900)	120

8331-□□□-294□-□-N (Plug, Right angle, 3 rows)

Unit : mm(inch)

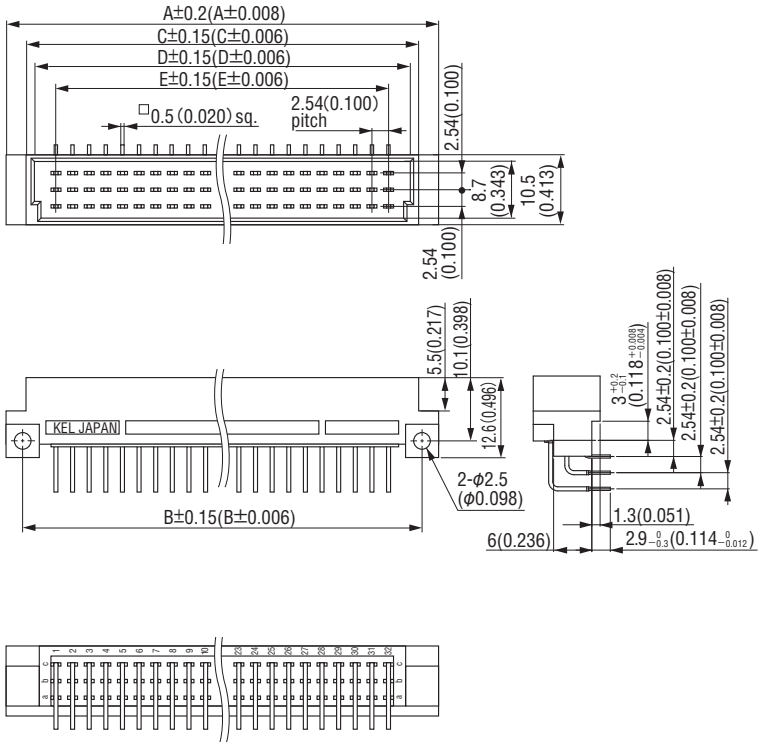

Printed Circuit Board Layout (Component Side View)

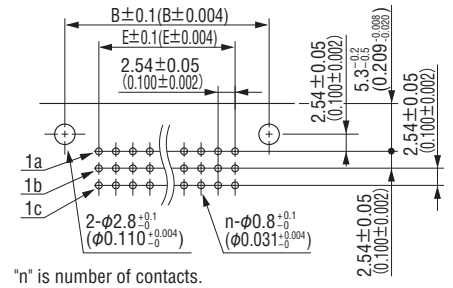

"n" is number of contacts.

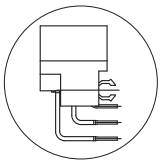

■ (Option) With hooks
Recommended PWB
thickness :1.6mm (0.063)

Packaging style
Other

Product Table / Dimensions

No. of contacts	Part Number	A	B	C	D	E	Number of packaging
48	8331-048-294□-□-N	53.26 (2.097)	48.26 (1.900)	46.86 (1.845)	44.66 (1.758)	38.10 (1.500)	180
96	8331-096-294□-□-N	93.90 (3.697)	88.90 (3.500)	87.50 (3.445)	85.30 (3.358)	78.74 (3.100)	100

8341-□□□-294□-□-N (Plug, Right angle, Flush mounting, 2 rows)

Unit : mm(inch)

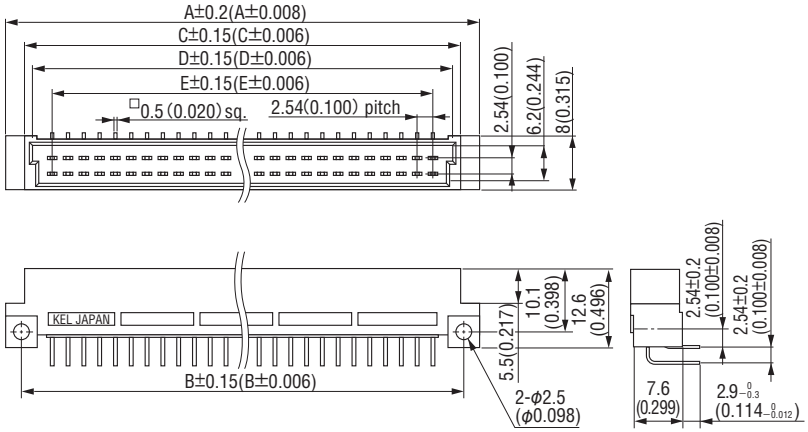

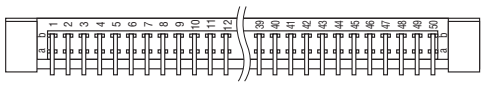

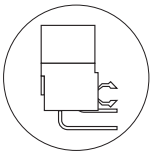

■ (Option) With hooks
Recommended PWB thickness :1.6mm(0.063")

Printed Circuit Board Layout (Component Side View)

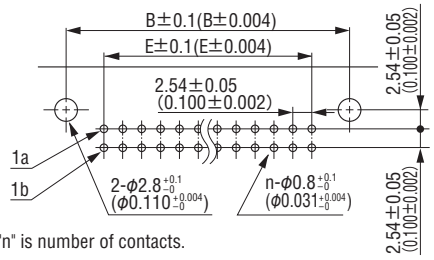

"n" is number of contacts.

Packaging style
Other

Product Table / Dimensions

No. of contacts	Part Number	A	B	C	D	E	Number of packaging
32	8341-032-294□-□-N	53.26 (2.097)	48.26 (1.900)	46.86 (1.845)	44.66 (1.758)	38.10 (1.500)	300
44	8341-044-294□-□-N	68.50 (2.697)	63.50 (2.500)	62.10 (2.445)	59.90 (2.358)	53.34 (2.100)	260
50	8341-050-294□-□-N	76.12 (2.997)	71.12 (2.800)	69.72 (2.745)	67.52 (2.658)	60.96 (2.400)	240
64	8341-064-294□-□-N	93.90 (3.697)	88.90 (3.500)	87.50 (3.445)	85.30 (3.358)	78.74 (3.100)	180
90	8341-090-294□-□-N	126.92 (4.997)	121.92 (4.800)	120.52 (4.745)	118.32 (4.658)	111.76 (4.400)	130
100	8341-100-294□-□-N	139.62 (5.497)	134.62 (5.300)	133.22 (5.245)	131.02 (5.158)	124.46 (4.900)	120

8341-□□□-294□-□-N (Plug, Right angle, Flush mounting, 3 rows)

Unit : mm(inch)

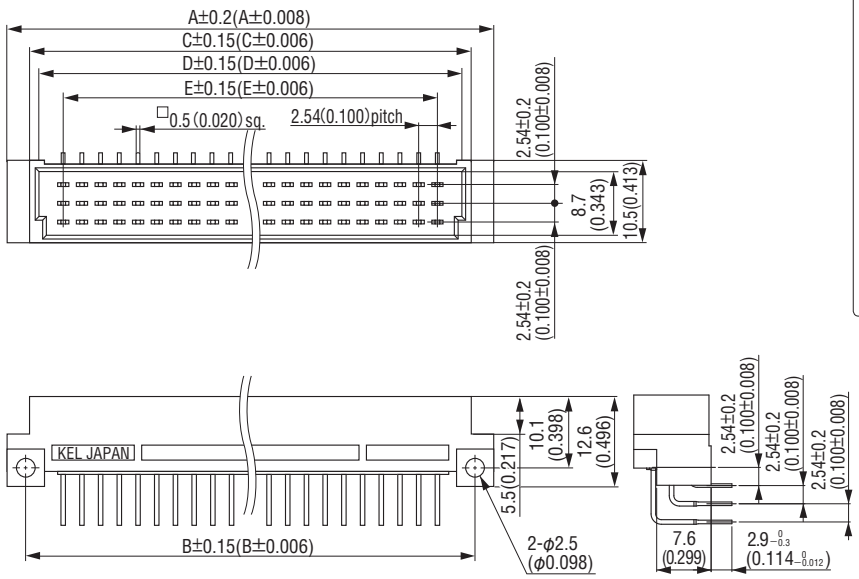

Printed Circuit Board Layout (Component Side View)

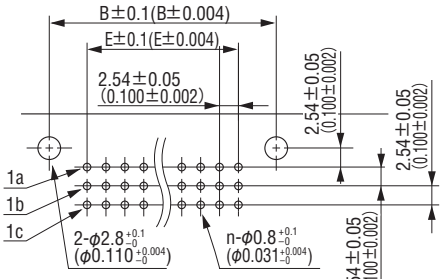

"n" is number of contacts.

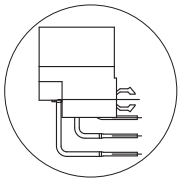

■ (Option) With hooks
Recommended PWB
thickness :1.6mm(0.063")

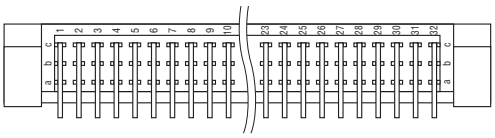

Packaging style
Other

Product Table / Dimensions

No. of contacts	Part Number	A	B	C	D	E	Number of packaging
48	8341-048-294□-□-N	53.26 (2.097)	48.26 (1.900)	46.86 (1.845)	44.66 (1.758)	38.10 (1.500)	180
96	8341-096-294□-□-N	93.90 (3.697)	88.90 (3.500)	87.50 (3.445)	85.30 (3.358)	78.74 (3.100)	100

8431-□□□-294□-N (Plug, Straight, 2 rows)

Unit : mm(inch)

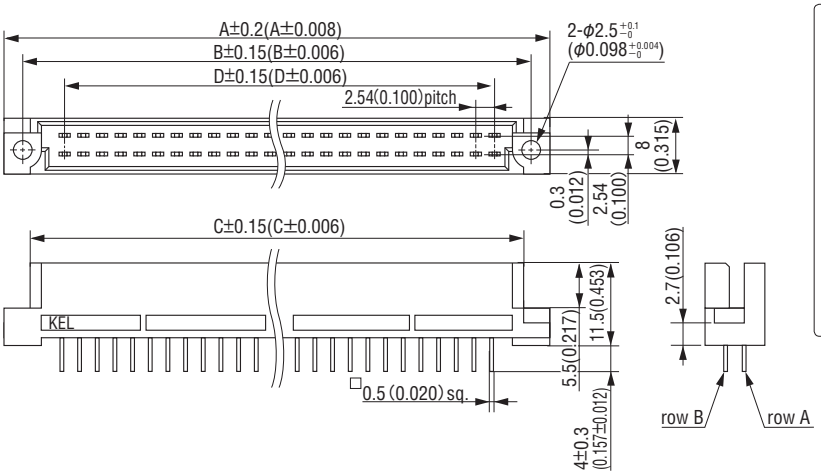

Printed Circuit Board Layout (Component Side View)

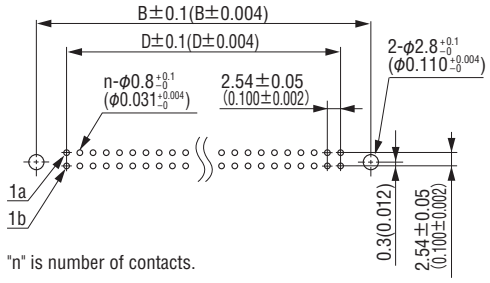

"n" is number of contacts.

Packaging style
Other

Product Table / Dimensions

No. of contacts	Part Number	A	B	C	D	Number of packaging
32	8431-032-294□-N	53.26 (2.097)	49.36 (1.943)	46.86 (1.845)	38.10 (1.500)	300
44	8431-044-294□-N	68.50 (2.697)	64.60 (2.543)	62.10 (2.445)	53.34 (2.100)	260
50	8431-050-294□-N	76.12 (2.997)	72.22 (2.843)	69.72 (2.745)	60.96 (2.400)	240
64	8431-064-294□-N	93.90 (3.697)	90.00 (3.543)	87.50 (3.445)	78.74 (3.100)	180
90	8431-090-294□-N	126.92 (4.997)	123.02 (4.843)	120.52 (4.745)	111.76 (4.400)	120
100	8431-100-294□-N	139.62 (5.497)	135.72 (5.343)	133.22 (5.245)	124.46 (4.900)	120

8431-□□□-294□-N (Plug, Straight, 3 rows)

Unit : mm(inch)

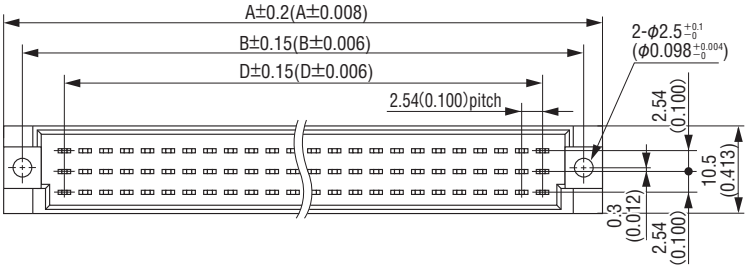

Printed Circuit Board Layout (Component Side View)

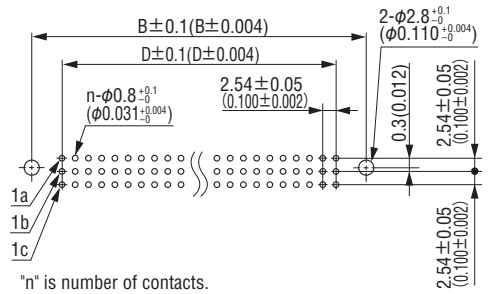

"n" is number of contacts.

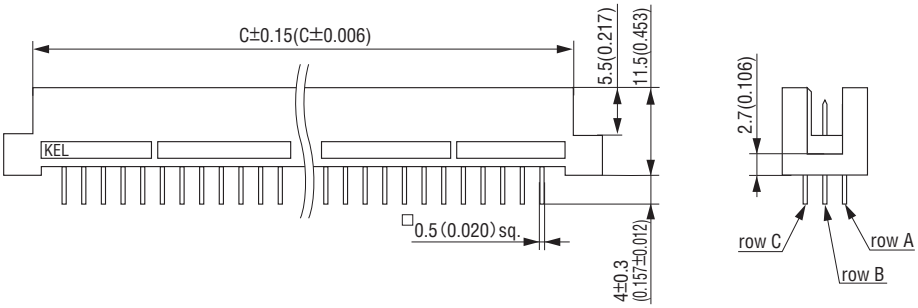

Packaging style
Other

Product Table / Dimensions

No. of contacts	Part Number	A	B	C	D	Number of packaging
48	8431-048-294-□-N	53.26 (2.097)	49.36 (1.943)	46.86 (1.845)	38.10 (1.500)	240
96	8431-096-294-□-N	93.90 (3.697)	90.00 (3.543)	87.50 (3.445)	78.74 (3.100)	140

⊗ is screw mounting position.

Vertical mating

Unit : mm(inch)

◆2 rows

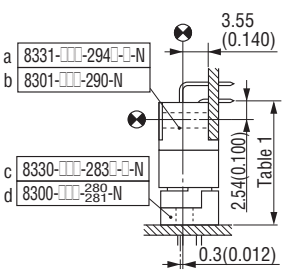

Table1	c	d
a	17.84 (0.702)	17.74 (0.698)
b	17.84 (0.702)	17.74 (0.698)

◆3 rows

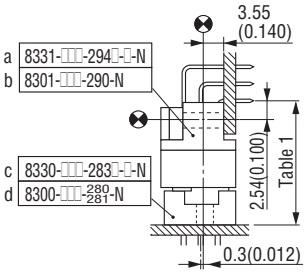

Table1	c	d
a	17.84 (0.702)	17.74 (0.698)
b	17.84 (0.702)	17.74 (0.698)

◆2 rows

Table2	c	d
a	5.22 (0.206)	5.22 (0.206)
b	5.22 (0.206)	5.22 (0.206)

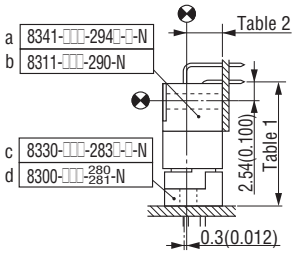

Table1	c	d
a	17.84 (0.702)	17.74 (0.698)
b	17.84 (0.702)	17.74 (0.698)

◆3 rows

Table2	c	d
a	5.20 (0.205)	5.20 (0.205)
b	5.25 (0.207)	5.25 (0.207)

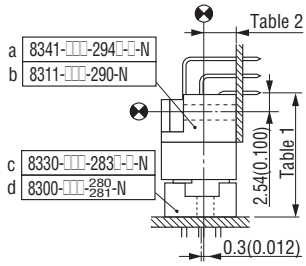

Table1	c	d
a	17.84 (0.702)	17.74 (0.698)
b	17.84 (0.702)	17.74 (0.698)

◆2 rows

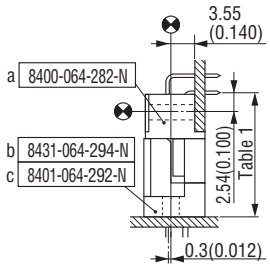

Table1	c	d
a	17.94 (0.706)	18.04 (0.710)

◆3 rows

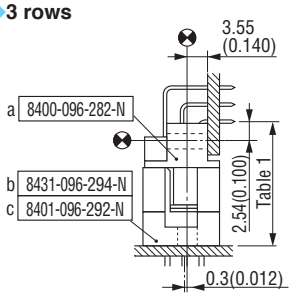

Table1	c	d
a	17.94 (0.706)	18.04 (0.710)

◆2 rows

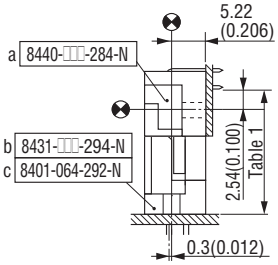

Table1	c	d
a	17.81 (0.701)	17.91 (0.705)

◆3 rows

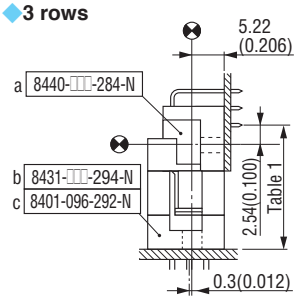

Table1	c	d
a	17.81 (0.701)	17.91 (0.705)

Horizontal mating

Unit : mm(inch)

◆2 rows

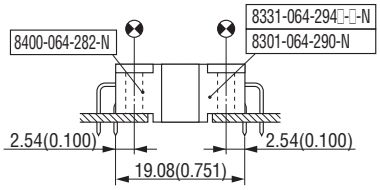

◆3 rows

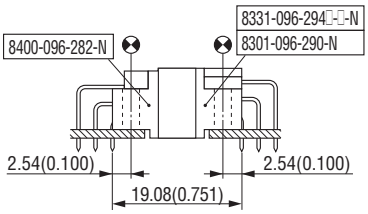

◆2 rows

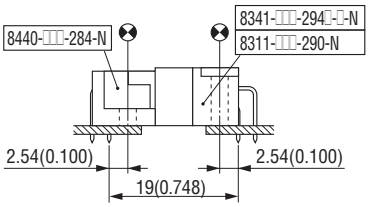

◆3 rows

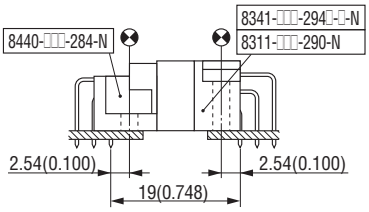

Stacked mating

Unit : mm(inch)

◆2 rows

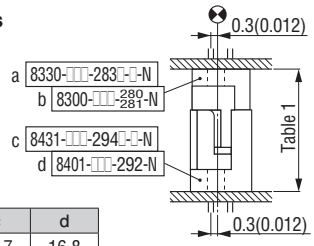

Table1	c	d
a	16.7 (0.657)	16.8 (0.661)
b	16.6 (0.654)	16.7 (0.657)

◆3 rows

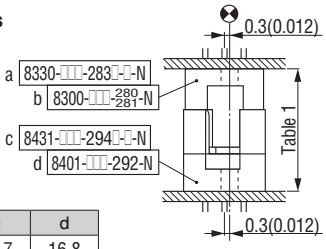

Table1	c	d
a	16.7 (0.657)	16.8 (0.661)
b	16.6 (0.654)	16.7 (0.657)

4640 SERIES 2.54mm CARD EDGE CONNECTOR

RoHS Compliant

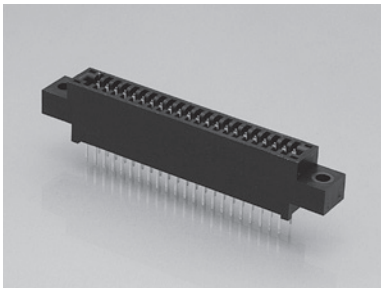

ORDER CODE

4640-□□□-□□□-F

① ② ③ ④

*Please order in multiples of the quantity per package.

①	【Type】 4640
②	【No. of contacts】 044 : 44pin 048 : 48pin 056 : 56pin 060 : 60pin 062 : 62pin 072 : 72pin 086 : 86pin 088 : 88pin 100 : 100pin
③	【Contact name】 041 : DIP solder 141 : Wire wrap
④	【RoHS】 F : RoHS compliant

SPECIFICATIONS

Material and plating	
Insulator material	Glass-Filled PBT (UL94V-0)
Contact material	Copper Alloy
Contact plating	(Contact area)Gold over Nickel (Terminal area)Tin copper over Nickel
Recommended PCB thickness	t=1.6(0.063)

Electrical Characteristics	
Current rating	3A per contact
Contact resistance	16mΩ max.
Dielectric withstanding voltage	800V AC for 1minute
Insulation resistance	5,000MΩ min. at 500V DC
Insertion force	4.04N max./pair
Withdrawal force	0.314N min./pair
Operating temperature	-55°C to +85°C

4640-□□□-□□□-F

Unit : mm(inch)

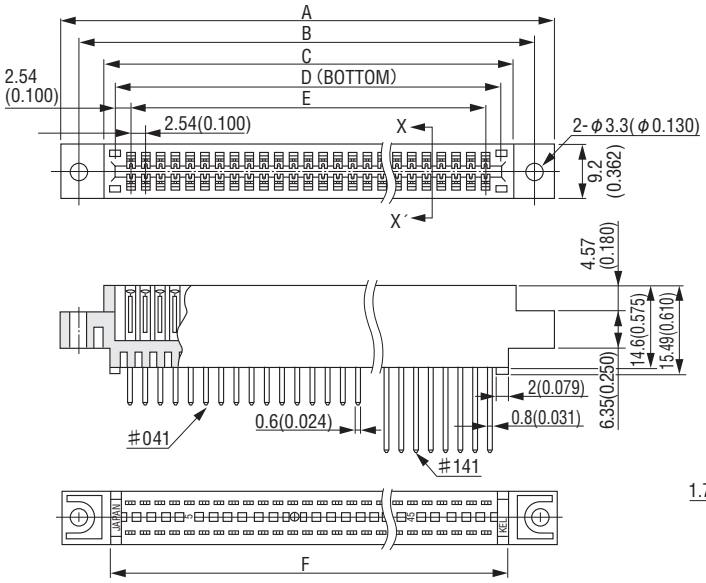

Printed Circuit Board Layout (Component Side View)

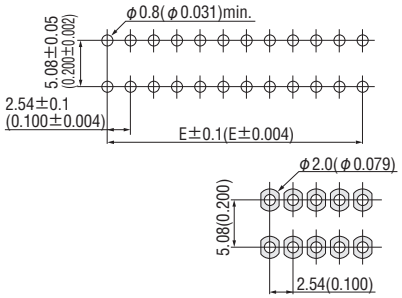

Positioning Post:KEY-21

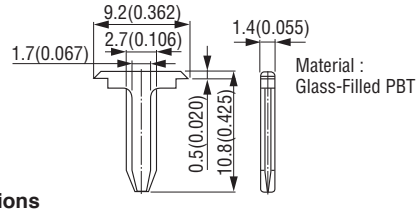

Packaging style
Other

X-X′Cross Section

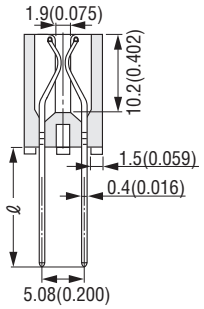

※ℓ: #041····· 6.2±0.5 (0.244±0.020)
#141·····14.5±0.5 (0.571±0.020)

Product Table / Dimensions

No. of contacts	Part Number	A	B	C	D	E	F	Number of packaging
44	4640-044-041-F / 141-F	77.09 (3.035)	70.49 (2.775)	62.48 (2.460)	58.42 (2.300)	53.34 (2.100)	59.69 (2.350)	150 / 100
48	4640-048-041-F / 141-F	82.17 (3.235)	75.57 (2.975)	67.56 (2.660)	63.50 (2.500)	58.42 (2.300)	64.77 (2.550)	130 / 85
56	4640-056-041-F / 141-F	92.33 (3.635)	85.73 (3.375)	77.72 (3.060)	73.66 (2.900)	68.58 (2.700)	74.93 (2.950)	120 / 80
60	4640-060-041-F / 141-F	97.41 (3.835)	90.81 (3.575)	82.80 (3.260)	78.74 (3.100)	73.66 (2.900)	80.01 (3.150)	110 / 78
62	4640-062-041-F / 141-F	99.95 (3.935)	93.35 (3.675)	85.34 (3.360)	81.28 (3.200)	76.20 (3.000)	82.55 (3.250)	110 / 75
72	4640-072-041-F / 141-F	112.65 (4.435)	106.05 (4.175)	98.04 (3.860)	93.98 (3.700)	88.90 (3.500)	95.25 (3.750)	100 / 70
86	4640-086-041-F / 141-F	130.43 (5.135)	123.83 (4.875)	115.82 (4.560)	111.76 (4.400)	106.68 (4.200)	113.03 (4.450)	85 / 55
88	4640-088-041-F / 141-F	132.97 (5.235)	126.37 (4.975)	118.36 (4.660)	114.30 (4.500)	109.22 (4.300)	115.57 (4.550)	85 / 50
100	4640-100-041-F / 141-F	148.21 (5.835)	141.61 (5.575)	133.60 (5.260)	129.54 (5.100)	124.46 (4.900)	130.81 (5.150)	75 / 50

B.C.E. S.r.l. Via Regina Pacis, 54/c - I 41049 Sassuolo (MO)
Tel.: (+39) 0536 811616 - Fax.: (+39) 0536 811500 e-mail: bce@bce.it - Website: www.bce.it

4820 SERIES 3.18(3.175)mm PITCH CARD EDGE CONNECTOR

RoHS Compliant

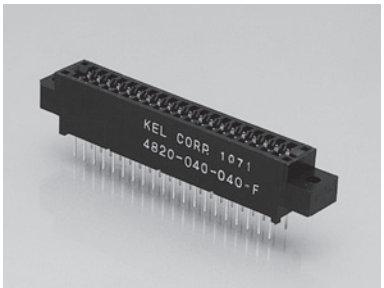

ORDER CODE 4820-□□□-□□□-F

① ② ③ ④

*Please order in multiples of the quantity per package.

① 【Type】 4820
② 【No. of contacts】 040 : 40pin 060 : 60pin 080 : 80pin 100 : 100pin
③ 【Contact name】 040 : DIP solder 140 : Wire wrap
④ 【RoHS】 F : RoHS compliant

SPECIFICATIONS

Material and plating	
Insulator material	Glass-Filled PBT (UL94V-0)
Contact material	Copper Alloy
Contact plating	(Contact area)Gold over Nickel (Terminal area)Tin copper over Nickel
Recommended PCB thickness	t=1.6(0.063)

Electrical Characteristics	
Current rating	3A per contact
Contact resistance	16mΩ max.
Dielectric withstanding voltage	1600V AC for 1minute
Insulation resistance	5,000MΩ min. at 500V DC
Insertion force	4.04N max./pair
Withdrawal force	0.314N min./pair
Operating temperature	-55°C to +85°C

4820-□□□-□□□-F

Unit : mm(inch)

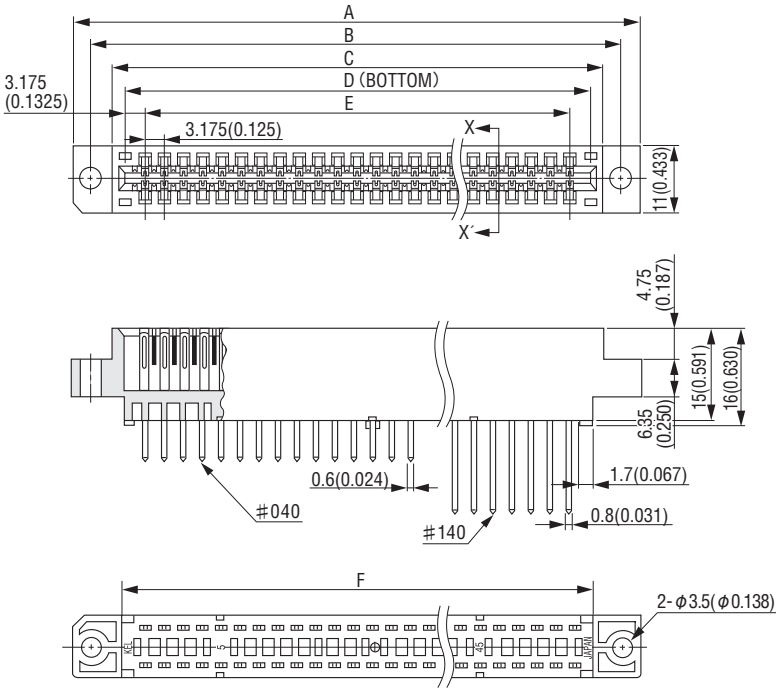

Printed Circuit Board Layout (Component Side View)

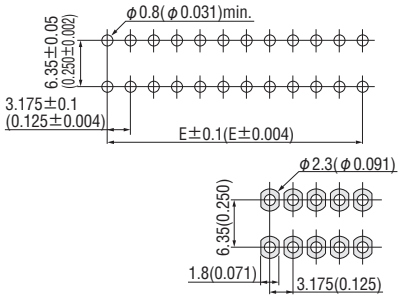

X-X′Cross Section

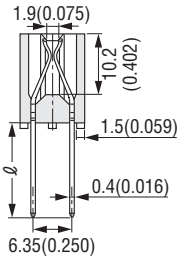

※ ℓ : #040····· 7.0±0.5
(0.276±0.020)
#140·····16.0±0.5
(0.630±0.020)

Positioning Post:KEY-20A

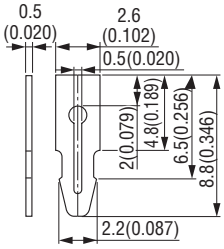

Material : Copper Alloy

Packaging style
Other

Product Table / Dimensions

No. of contacts	Part Number	A	B	C	D	E	F	Number of packaging
40	4820-040-040-F 4820-040-140-F	83.84 (3.301)	77.34 (3.045)	70.61 (2.780)	66.68 (2.625)	60.325 (2.375)	66.68 (2.625)	100 70
60	4820-060-040-F 4820-060-140-F	115.59 (4.551)	109.09 (4.295)	102.36 (4.030)	98.43 (3.875)	92.075 (3.625)	98.43 (3.875)	80 50
80	4820-080-040-F 4820-080-140-F	147.34 (5.801)	140.84 (5.545)	134.11 (5.280)	130.18 (5.125)	123.825 (4.875)	130.18 (5.125)	65 40
100	4820-100-040-F 4820-100-140-F	179.09 (7.051)	172.59 (6.795)	165.86 (6.530)	161.93 (6.375)	155.575 (6.125)	161.93 (6.375)	40 25

1168 SERIES 3.97mm PITCH CARD EDGE CONNECTOR

RoHS Compliant

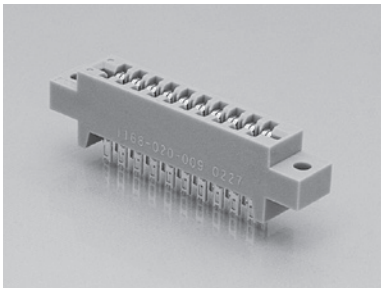

ORDER CODE 1168-□□□-□□□

① ② ③

*Please order in multiples of the quantity per package.

① 【Type】 1168

② 【No. of contacts】 020 : 20pin 028 : 28pin 030 : 30pin 036 : 36pin 044 : 44pin 056 : 56pin

③ 【Contact name】 009 : Solder eyeley 029 : DIP solder

SPECIFICATIONS

Material and plating	
Insulator material	Glass-Filled Polycarbonate (UL94V-0)
Contact material	Copper alloy
Contact plating	Gold over Nickel
Recommended PCB thickness	t=1.6(0.063)

Electrical Characteristics	
Current rating	2A per contact
Contact resistance	15mΩ max.
Dielectric withstanding voltage	1500V AC for 1minute
Insulation resistance	5,000MΩ min. at 500V DC
Insertion force	4.9N max./pair
Withdrawal force	0.59N min./pair
Operating temperature	-30°C to +85°C

1168-□□□-□□□

Unit : mm(inch)

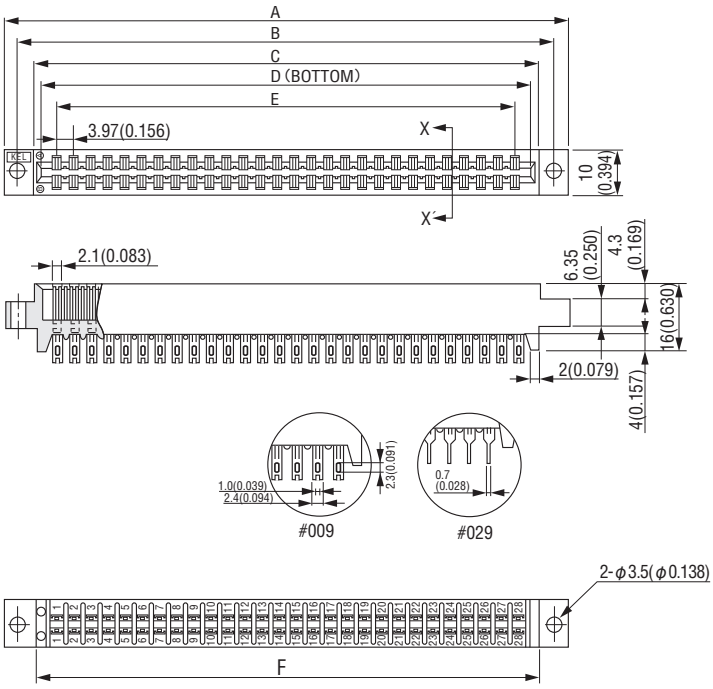

Printed Circuit Board Layout (Component Side View)

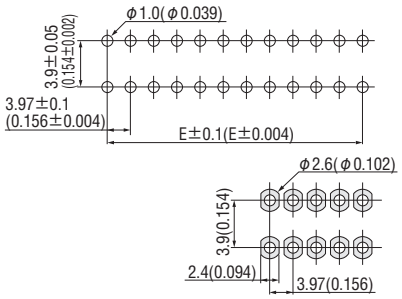

X-X' Cross Section

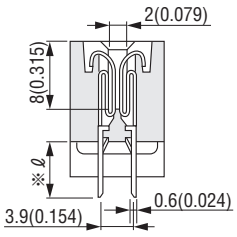

※ℓ : #009……6.5±0.5 (0.256±0.020)
#029……7.1±0.5 (0.280±0.020)

Positioning Post: KEY-18

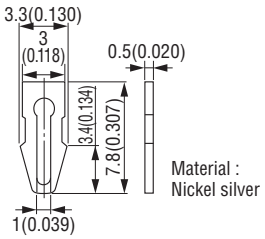

Packaging style
Other

Product Table / Dimensions

No. of contacts	Part Number	A	B	C	D	E	F	Number of packaging
20	1168-020-009	61.02 (2.402)	54.67 (2.152)	46.93 (1.848)	43.70 (1.720)	35.73 (1.407)	45.93 (1.808)	210
	1168-020-029							180
28	1168-028-009	76.90 (3.028)	70.55 (2.778)	62.81 (2.473)	59.58 (2.346)	51.61 (2.032)	61.81 (2.433)	170
	1168-028-029							140
30	1168-030-009	80.87 (3.184)	74.52 (2.934)	66.78 (2.629)	63.55 (2.502)	55.58 (2.188)	65.78 (2.590)	130
	1168-030-029							130
36	1168-036-009	92.78 (3.653)	86.43 (3.403)	78.69 (3.098)	75.46 (2.971)	67.49 (2.657)	77.69 (3.059)	120
	1168-036-029							100
44	1168-044-009	108.66 (4.278)	102.31 (4.028)	94.57 (3.723)	91.34 (3.596)	83.37 (3.282)	93.57 (3.684)	100
	1168-044-029							90
56	1168-056-009	132.48 (5.216)	126.13 (4.966)	118.39 (4.661)	115.16 (4.534)	107.19 (4.220)	117.39 (4.622)	70
	1168-056-029							70

B.C.E. S.r.l. Via Regina Pacis, 54/c - I 41049 Sassuolo (MO) Tel.: (+39) 0536 811616 - Fax.: (+39) 0536 811500 e-mail: bce@bce.it - Website: www.bce.it

1258N SERIES 3.96mm PITCH CARD EDGE CONNECTOR

RoHS Compliant

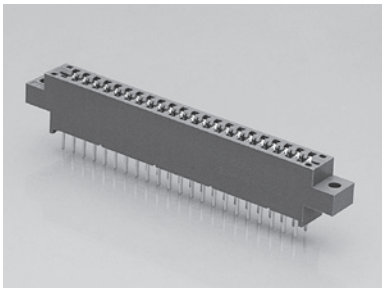

ORDER CODE 1258N - □□□ - □□□

① ② ③

*Please order in multiples of the quantity per package.

① 【Type】 1258N

② 【No. of contacts】 044 : 44pin 056 : 56pin 060 : 60pin 072 : 72pin 086 : 86pin 088 : 88pin

③ 【Contact name】 032 : DIP solder 132 : Wire wrap

SPECIFICATIONS

Material and plating	
Insulator material	Glass-Filled PBT (UL94V-0)
Contact material	Copper Alloy
Contact plating	Gold over Nickel
Recommended PCB thickness	t=1.6(0.063)

Electrical Characteristics	
Current rating	3A per contact
Contact resistance	10mΩ max.
Dielectric withstanding voltage	1600V AC for 1minute
Insulation resistance	5,000MΩ min. at 500V DC
Insertion force	4.9N max./pair
Withdrawal force	0.274N min./pair
Operating temperature	-55°C to +85°C

1258N-□□□-□□□

Unit : mm(inch)

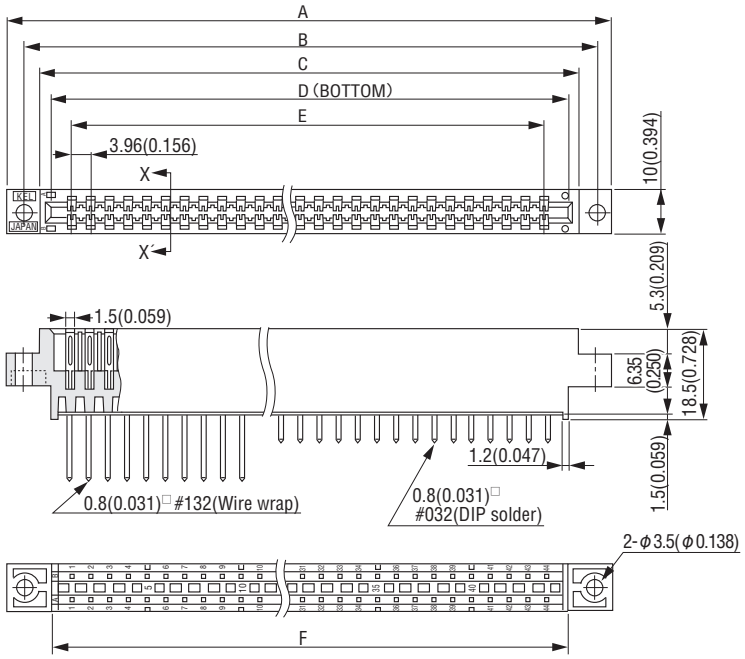

Printed Circuit Board Layout (Component Side View)

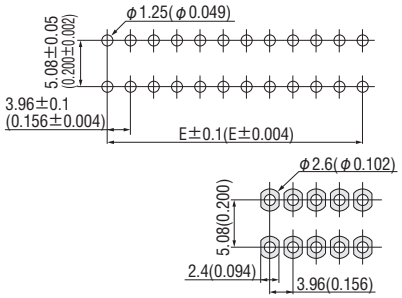

Positioning Post: KEY-21

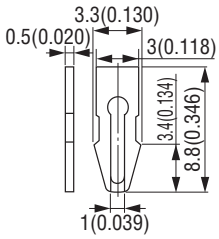

Material : Nickel silver

Packaging style
Other

X-X′Cross Section

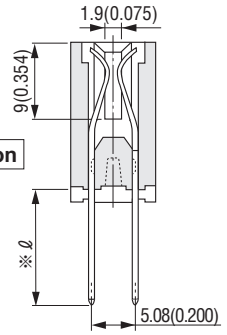

※ℓ : #032··· 6.5±0.5(0.256±0.020)
#132···18.5±1.0(0.728±0.039)

Product Table / Dimensions

No. of contacts	Part Number	A	B	C	D	E	F	Number of packaging
44	1258N-044-032/132	108.66 (4.278)	102.31 (4.028)	94.57 (3.723)	91.34 (3.596)	83.16 (3.274)	89.72 (3.532)	90 60
56	1258N-056-032/132	132.48 (5.216)	126.13 (4.966)	118.39 (4.661)	115.16 (4.534)	106.92 (4.209)	113.54 (4.470)	75 50
60	1258N-060-032/132	140.20 (5.520)	133.80 (5.268)	127.00 (5.000)	123.05 (4.844)	114.84 (4.521)	127.00 (5.000)	75 50
72	1258N-072-032/132	164.24 (6.466)	157.89 (6.216)	150.15 (5.911)	146.92 (5.784)	138.60 (5.457)	145.30 (5.720)	45 30
86	1258N-086-032/132	191.90 (7.555)	185.50 (7.303)	177.81 (7.000)	174.50 (6.870)	166.32 (6.548)	172.96 (6.809)	45 30
88	1258N-088-032/132	196.00 (7.717)	189.65 (7.467)	181.91 (7.162)	178.68 (7.035)	170.28 (6.704)	177.06 (6.971)	45 30

M E M O

BOARD TO CABLE CONNECTORS

- XSL SERIES
- XSLS SERIES
- USL SERIES
- USLS SERIES
- USLS21 SERIES
- SSL SERIES
- TMC SERIES
- 8929E SERIES
- FTC SERIES
- FAS SERIES
- FA SERIES
- FBC SERIES
- 8622E SERIES
- 8925E SERIES
- 8825E SERIES
- 8822E/8822 SERIES

KEL's CUSTOMIZED HARNESSES

KEL also offers our cable connectors pre-assembled with cables to make harness assemblies, which are customized to required specifications of our customers. KEL's professional harness engineers will provide you with assistance in total product design, and we take responsibilities in procurement and control of cables and other components. If you would like such a harness assembly, all you need to do is to send your order of the connector as "harness assembly" to KEL. Furthermore, based on the quality assurance as a harness assembly product we provide, we will solve your problems with the assembly after purchasing it.

If you need a standard harness assembly, our quick order system can offer you a more speedy response.

Drawing on the advantages and know-how we maintain as a connector manufacturer as well as using our abundant experience and achievements in our harness business, we are committed to offering you superior harness products that flexibly meet your requirements.

◆Customized harnesses process

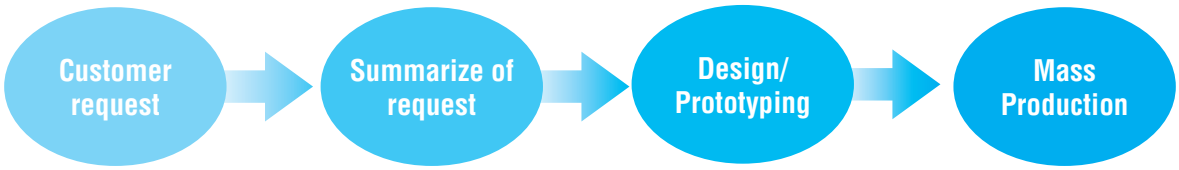

◆Customized harnesses examples

Example of noise suppression
Mounting a ferrite core

Example of shielding
Removal of sheath

Example of cable protection
Attaching a braided sleeve

Example of shielding
Attaching a drain wire

Exampls of cable bundling
Bundling with a shrinkable tube

Example of cable bundling
Bundling with a PTFE tape

Example of cable bundling
Bundling with a shrinkable tube

Example of cable bundling
Partial bundling with tape

Example of cable bundling
Bundling with a cable tie

Example of noise suppression
Metal shell

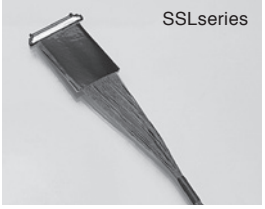

Example of cable protection
Taping

Example of cable bundling
Attaching a spiral tube

Our customization service is flexible. Please feel free to consult with your local KEL sales office regarding the specifications you need.

B.C.E. S.r.l. Via Regina Pacis, 54/c - I 41049 Sassuolo (MO) Tel.: (+39) 0536 811616 - Fax.: (+39) 0536 811500 e-mail: bce@bce.it - Website: www.bce.it

XSL SERIES

0.25mm PITCH CONNECTOR FOR MICRO COAXIAL CABLE

RoHS Compliant

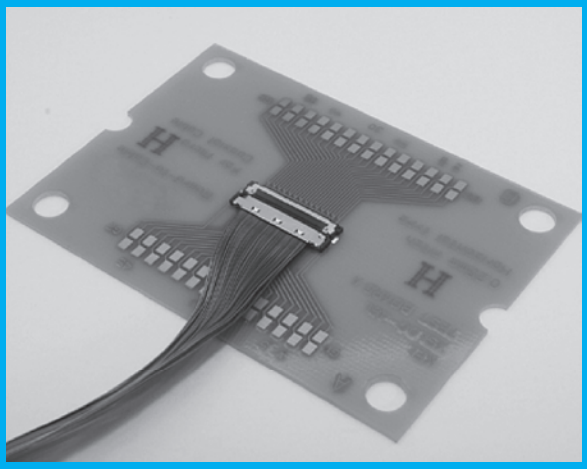

FEATURES

- Compact connector with a low profile of 1.0 mm(0.039") and a mating width of 6 mm(0.236").
- For micro coaxial cable(#44 AWG, #46 AWG).
- Signal terminals are soldered by Pulse Heat in one shot and keep a stable & highly reliable connection.
- Equipped with a metal shell, noise reduction and product strength are ensured.
- Multiple ground terminals are provided for enhanced transmission characteristics and EMS protection.
- Highly reliable design with effective mating length of 0.51mm(0.020").

*Specially designed insertion jig, withdrawal jig, and caulking jig for a shell are also available.

ORDER CODE

XSL00-48 L-□

① ② ③ ④

*Please order in multiples of the quantity per package.

① 【Type】 XSL00 : Receptacle (PCB side connector)
② 【Number of contacts】 48 : 48 pin
③ 【Contact tail style】 L : Right angle
④ 【Number of Packaging】 A : 500pcs. per reel B : 1,000pcs. per reel C : 3,000pcs. per reel

ORDER CODE

XSL20-48 S

① ② ③

*Please order in multiples of the quantity per package.

① 【Type】 XSLS20 : Plug (Cable side connector)
② 【Number of contacts】 48 : 48 pin
③ 【Cable exit style】 S : Straight

*Plug(cable side connector) is composed of a base and a shell.
The base is packed in tray (1,000pcs per box) and the shell is packed in embossed tape and reel (10,000pcs per reel),therefore MOQ of the plug is 10,000pcs.
Please contact your local KEL sales office for orders less than the MOQ 10,000pcs.

SPECIFICATIONS

Material and plating	
Insulator material	Glass-filled LCP(UL94V-0),Black
Contact material	Copper alloy
Contact plating	Gold over Nickel
Shell material	Copper alloy
Shell plating	Gold over Nickel
Shell2 material	[XSL20 Shell2] Nickel silver

Electrical Characteristics	
Current rating	0.25A per contact
Contact resistance	100mΩ max.
Dielectric withstanding voltage	90V AC for 1minute
Insutulation resistance	50MΩ min.at 100V DC
Operating temperature	-40°C to +85°C
Recommended cable	#44/46 AWG Micro coaxial cables (Outermost diameter: max. 0.24 mm(0.009"))

Mating Drawing

Unit : mm(inch)

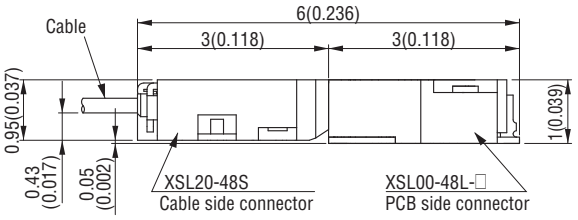

XSL00-48L-□ (Receptacle, PCB side connector)

Unit : mm(inch)

Printed Circuit Board Layout (Component Side View)

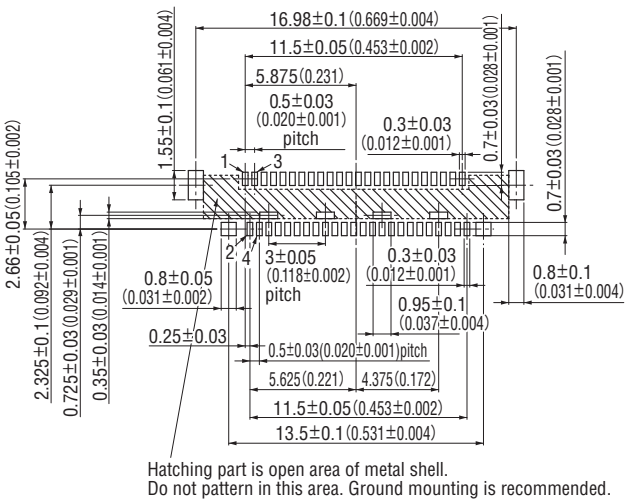

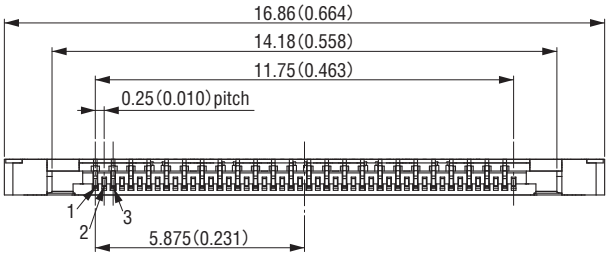

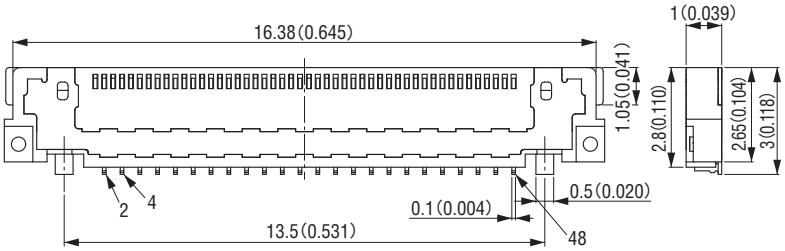

X-X′ Cross Section

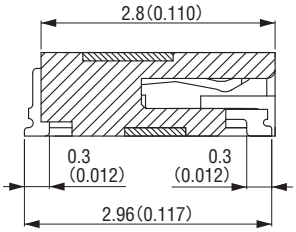

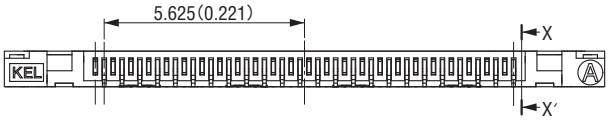

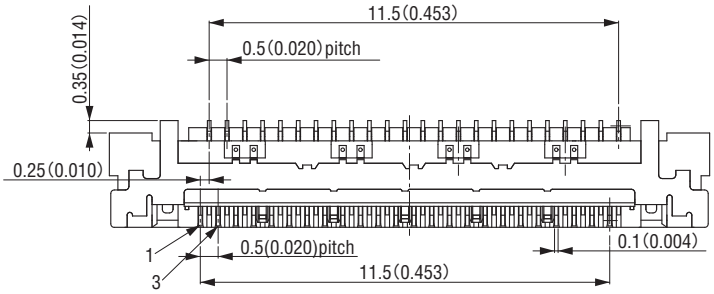

Ground Installation

No. of contacts	No. of ground
48	8

Packaging style
Embossed tape

Product Table

Part Number	Number of packaging
XSL00-48L-A	500
XSL00-48L-B	1,000
XSL00-48L-C	3,000

XSL20-48S (Plug, Cable side connector)

Unit : mm(inch)

XSL20-48S BASE

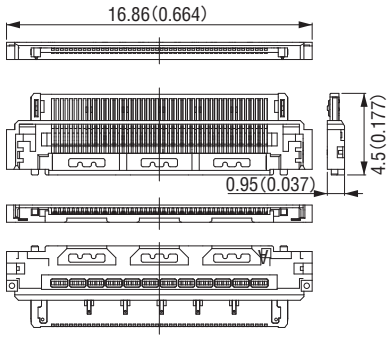

Number of packaging
1,000

XSL20-48S SHELL2

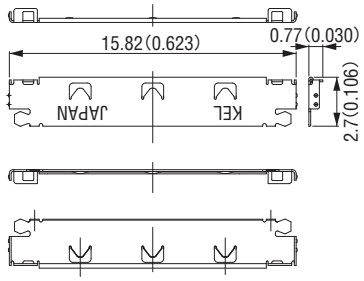

Number of packaging
10,000

*XSL20-48S BASE and XSL20-48S SHELL2 are component parts of XSL20-48S.

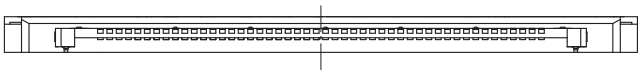

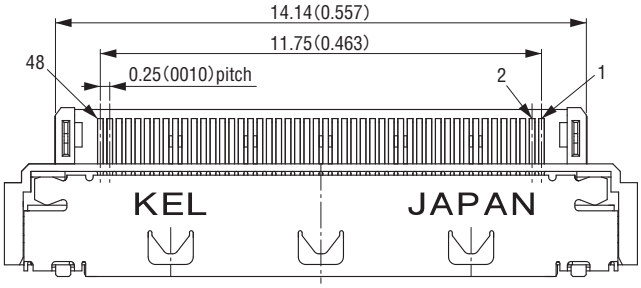

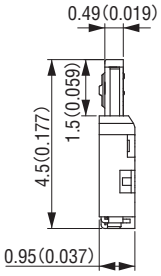

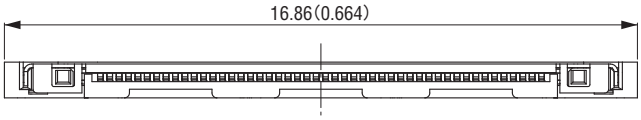

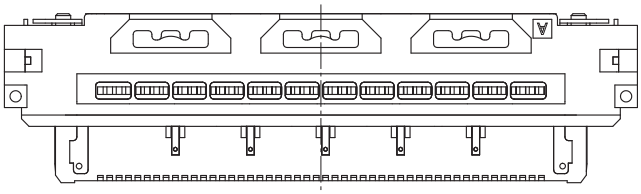

Packaging style
Other

Product Table

Part Number	Number of packaging
XSL20-48S	10,000

XSLS SERIES

RoHS Compliant

0.25mm PITCH CONNECTOR FOR MICRO COAXIAL CABLE (STACKING TYPE)

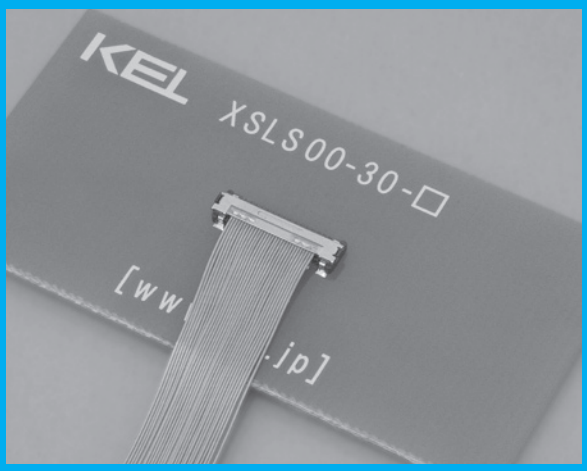

FEATURES

- Compact connector with a low profile of 1.44 mm(0.057") and a mating width of 3.05 mm(0.120").
- For micro coaxial cable (#42 AWG, #44 AWG, #46 AWG).
- Signal terminals are soldered by Pulse Heat in one shot and keep a stable & highly reliable connection.
- Equipped with a metal shell, noise reduction and product strength are ensured.
- Multiple ground terminals are provided for enhanced transmission characteristics and EMS protection.
- Highly reliable design with effective mating length of 0.31mm(0.012").
- Nickel barrier of the board side contact prevents solder wicking.
- Possible to put through narrow tube with a diameter of ϕ2.7mm (ϕ 0.106") even after soldering.
- The bottom of the connector is covered with resin, thus circuit may be printed under the connector.

*Specially designed withdrawal jig and caulking jig for a shell are also available.

ORDER CODE

XSLS0□-□□-□

① ② ③

*Please order in multiples of the quantity per package.

① 【Type】 Receptacle (PCB side connector) **XSLS00 :** With suction pick-up surface **XSLS01 :** Without suction pick-up surface

② 【Number of contacts】 **30 :** 30 pin **40 :** 40 pin

③ 【Number of packaging】 **A :** 500pcs. per reel **B :** 3000pcs. per reel **C :** 5000pcs. per reel

ORDER CODE

XSLS20-□□-□

① ② ③

*Please order in multiples of the quantity per package.

① 【Type】 **XSLS20 :** Plug (Cable side connector)

② 【Number of contacts】 **30 :** 30 pin **40 :** 40 pin

③ 【Number of packaging】 **Omit :** 10,000pcs. per reel **A :** 1,000pcs. per reel (Only 40 pin) **B :** 2,000pcs. per reel (Only 40 pin)

*Plug(cable side connector) is composed of a base and a shell.
The base is packed in embossed tape and reel (5,000pcs per reel) and the shell is packed in embossed tape and reel (10,000pcs per reel),therefore MOQ of the plug is 10,000pcs. Please contact your local KEL sales office for orders less than the MOQ 10,000pcs.

SPECIFICATIONS

Material and finish		Electrical Characteristics	
Insulator material	[XSLS00]Glass-filled LCP(UL94V-0), Black [XSLS20]Inorganic Filler LCP(UL94V-0), Black	Current rating	0.3A per contact
		Contact resistance	100mΩ max.
Contact material	Copper alloy	Dielectric withstanding voltage	100V AC for 1 minute
Contact plating	Gold over Nickel	Insulation resistance	50MΩ min. At 100V DC
Retention clip material	Copper alloy	Operating temperature	-40°C to +85°C
Retention clip plating	Gold over Nickel	Insertion and withdrawal durability	30 times
Shell material	Stainless	Recommended cable	#42/44/46 AWG Micro coaxial cables (Outermost diameter: max. 0.235 mm(0.009"))
Shell plating	Gold over Nickel		

Mating Drawing

Unit : mm(inch)

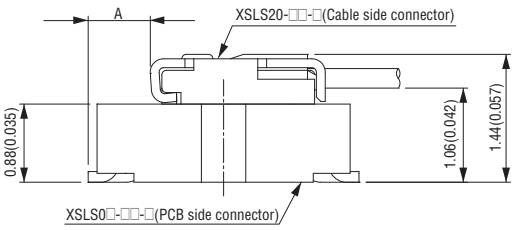

Dimensions

No. of contacts	A
30	0.70 (0.028)
40	0.68 (0.027)

XSLS0□-□□-□ (Receptacle, PCB side connector)

Unit : mm(inch)

Printed Circuit Board Layout (Component Side View)

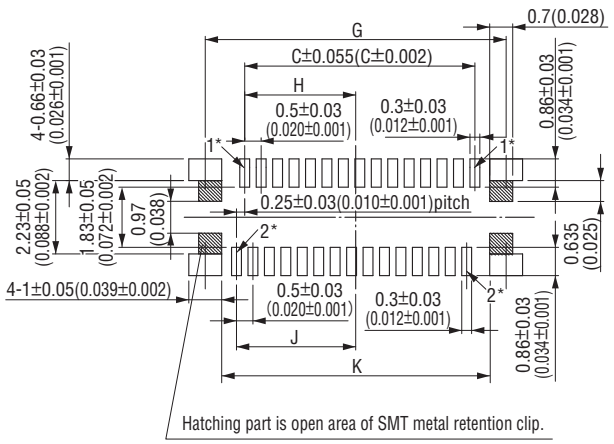

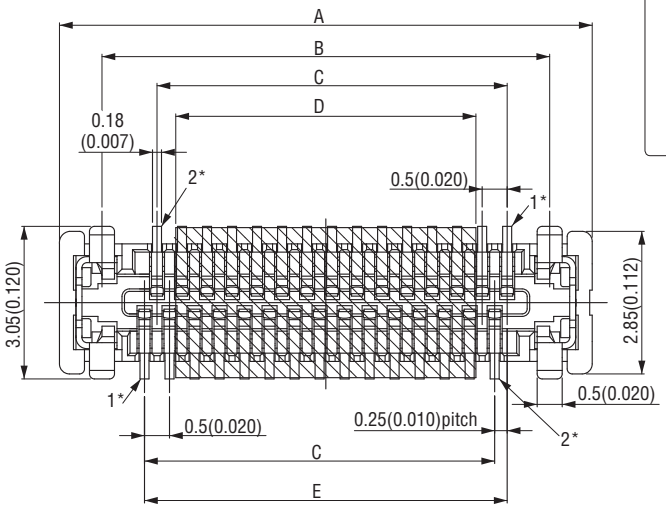

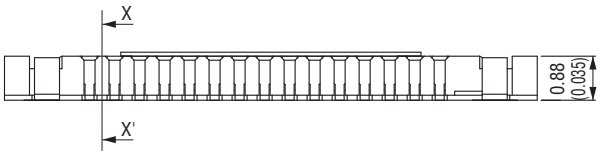

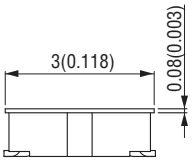

X-X′Cross Section

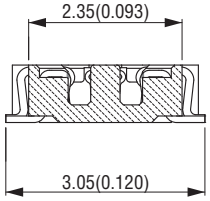

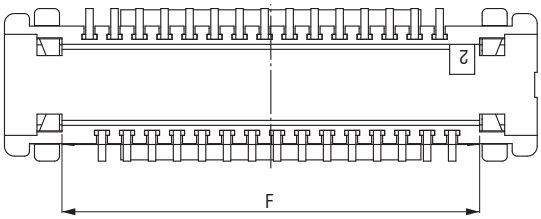

* There is no specific direction for mounting or mating due to that the connector is in rotational symmetric shape.
Please pay attention to pin assignment and mating direction of the plug connector.

Ground Installation

No. of contacts	No. of ground
30	4
40	4

Packaging style
Embossed tape

Product Table

Part Number	Number of packaging
XSLS0□-□□-A	500
XSLS0□-□□-B	3,000
XSLS0□-□□-C	5,000

Product Table / Dimensions

No. of contacts	Part Number	A	B	C	D	E	F	G	H	J	K
30	XSLS0□-30-□	10.65 (0.419)	8.95 (0.352)	7.0 (0.276)	6.0 (0.236)	7.25 (0.285)	8.35 (0.329)	9.15 (0.360)	3.375 (0.133)	3.625 (0.143)	8.15 (0.321)
40	XSLS0□-40-□	13.15 (0.518)	11.45 (0.451)	9.5 (0.374)	6.0 (0.236)	9.75 (0.384)	10.85 (0.427)	11.65 (0.459)	4.625 (0.182)	4.875 (0.192)	10.65 (0.419)

B.C.E. S.r.l. Via Regina Pacis, 54/c - I 41049 Sassuolo (MO) Tel.: (+39) 0536 811616 - Fax.: (+39) 0536 811500 e-mail: bce@bce.it - Website: www.bce.it

XSLS20-□□-□ (Plug, Cable side connector)

Unit : mm(inch)

XSLS20-□□BASE-□

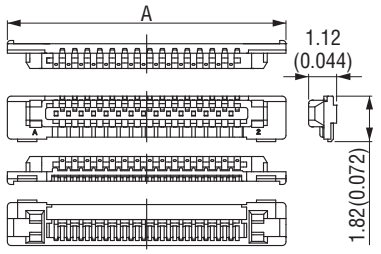

Part Number	Number of packaging
XSLS20-□□BASE	5,000
XSLS20-40BASE-A	1,000
XSLS20-40BASE-B	2,000

XSLS20-□□SHELL-□

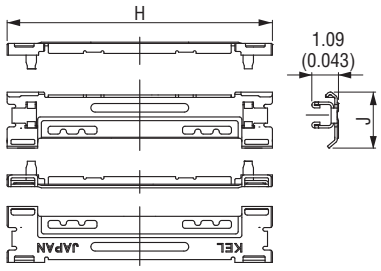

Part Number	Number of packaging
XSLS20-□□SHELL	10,000
XSLS20-40SHELL-A	1,000
XSLS20-40SHELL-B	2,000

*XSLS20-□□BASE-□ and XSLS20-□□SHELL-□ are component parts of XSLS20-□□-□.

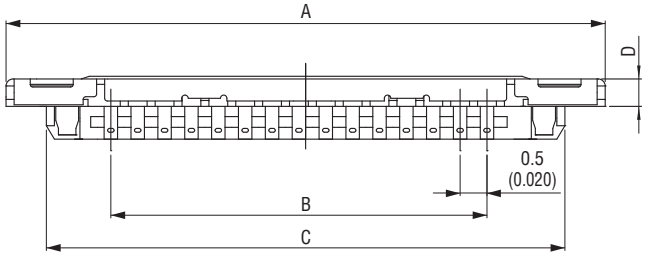

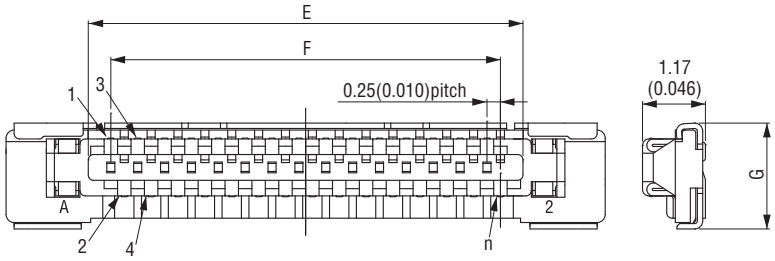

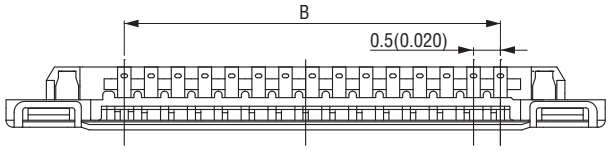

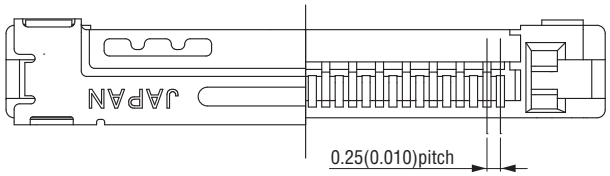

"n" is number of contacts.

Packaging style
Embossed tape

Product Table

Part Number	Number of packaging
XSLS20-□□	10,000
XSLS20-40-A	1,000
XSLS20-40-B	2,000

Product Table / Dimensions

No. of contacts	Part Number	A	B	C	D	E	F	G	H	J
30	XSLS20-30	11.15 (0.439)	7.0 (0.276)	9.65 (0.380)	0.51 (0.020)	8.09 (0.319)	7.25 (0.285)	1.97 (0.078)	10.85 (0.427)	2.29 (0.090)
40	XSLS20-40-□	13.65 (0.537)	9.5 (0.374)	12.15 (0.478)	0.56 (0.022)	10.59 (0.417)	9.75 (0.384)	1.99 (0.078)	13.35 (0.526)	2.40 (0.094)

Printed Circuit Board Layout (for reference only)

The XSLS Series connector is designed to be rotationally symmetric and, thus, mounting or mating in either orientation is possible. Therefore, please be careful with the pin arrangement and mating orientation when inserting into a plug connector. For proper pin arrangement depending on the inserting direction into the plug connector (on the connector mounted surface), refer to the drawings below.

Mating orientation – For a connector with top cable entry

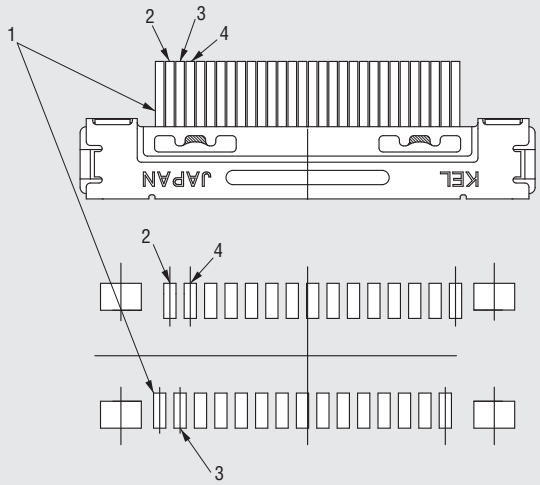

Mating orientation – For a connector with bottom cable entry

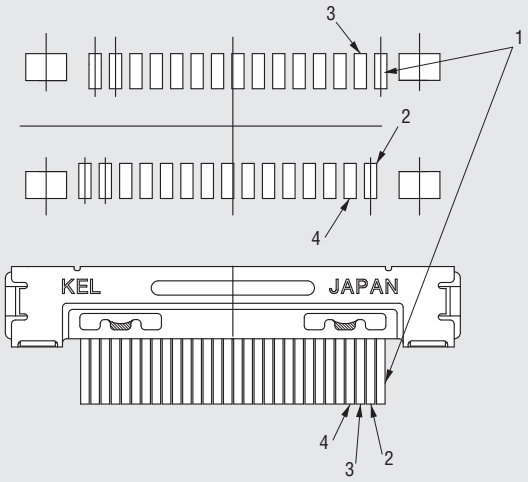

USL SERIES

0.4mm PITCH CONNECTOR FOR MICRO COAXIAL CABLE

RoHS Compliant

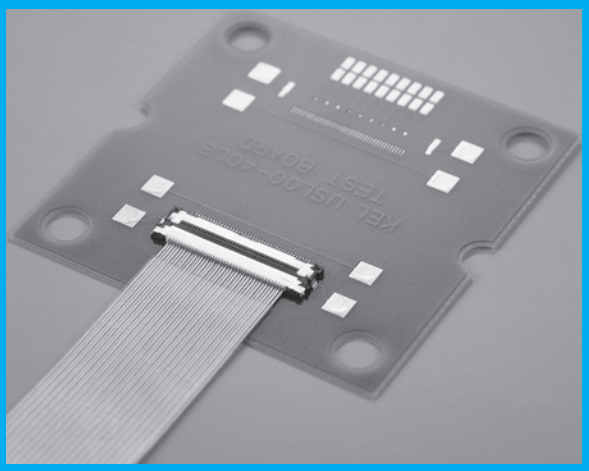

FEATURES

- Compact connector with a low profile of 1.0 mm(0.039") and a mating width of 5.6 mm(0.220").
- For micro coaxial cable(#42 AWG).
- IDC of contacts all together is adopted for improved connection reliability and more compact connectors.
- Equipped with a metal shell, noise reduction and product strength are ensured.
- Multiple ground terminals are provided for enhanced transmission characteristics and EMS protection.
- Highly reliable design with effective mating length of 0.5mm(0.020).

*Specially designed withdrawal jig is available.

ORDER CODE

USL00-□□L-□

① ② ③ ④

*Please order in multiples of the quantity per package.

① 【Type】 USL00 : Receptacle (PCB side connector)
② 【Number of contacts】 20 : 20 pin 30 : 30 pin 40 : 40 pin
③ 【Contact taill style】 L : Right angle
④ 【Number of packaging】 A : 500pcs. per reel B : 1,000pcs. per reel C : 3,000pcs. per reel

ORDER CODE

USL20-□□S

① ② ③

*Please order in multiples of the quantity per package.

① 【Type】 USL20 : Plug (Cable side connector)
② 【Number of contacts】 20 : 20 pin 30 : 30 pin 40 : 40 pin
③ 【Cable exit style】 S : Straight

*Plug (cable side connector) is composed of base and cover.

SPECIFICATIONS

Material and plating		Electrical Characteristics	
Insulator material	Glass-filled LCP(UL94V-0),Black	Current rating	0.25A per contact
Contact material	Copper alloy	Contact resistance	100mΩ max.
Contact plating	Gold over Nickel	Dielectric withstanding voltage	200V AC for 1minute
Shell material	Copper alloy	Insutulation resistance	100MΩ min.at 250V DC
Shell plating	Tin copper over Nickel	Operating temperature	-40°C to +85°C
IDC cover material	[USL20] Glass-filled LCP(UL94V-0),White	Recommended cable	#42 AWG Micro coaxial cables

Mating Drawing

Unit : mm(inch)

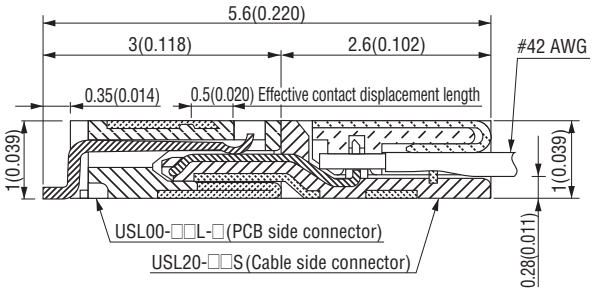

USL00-□□L-□ (Receptacle, PCB side connector)

Unit : mm(inch)

Printed Circuit Board Layout (Component Side View)

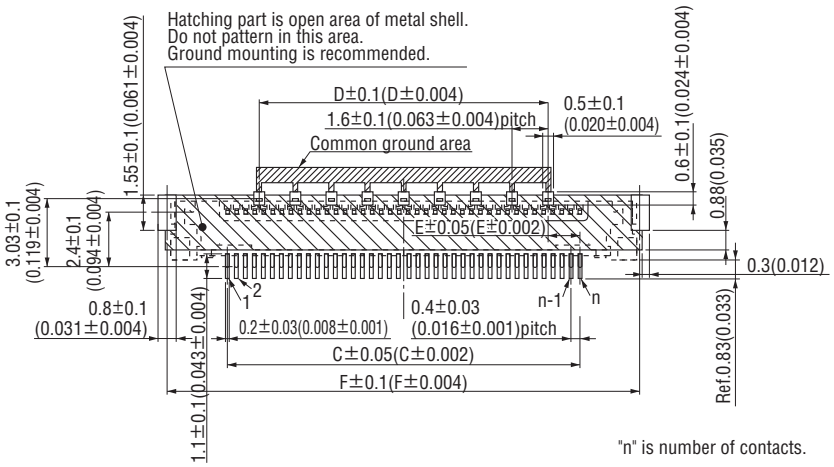

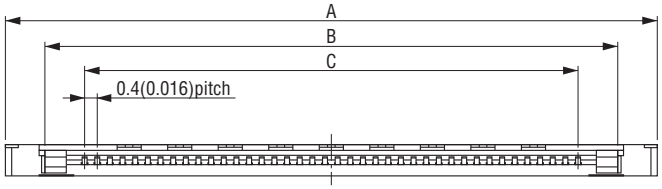

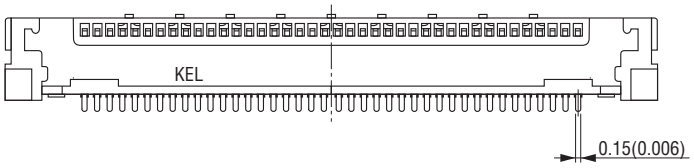

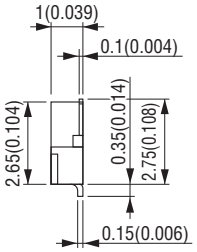

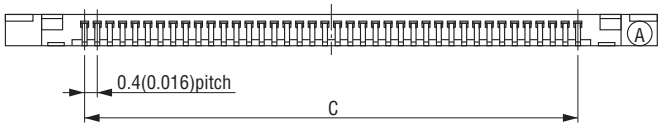

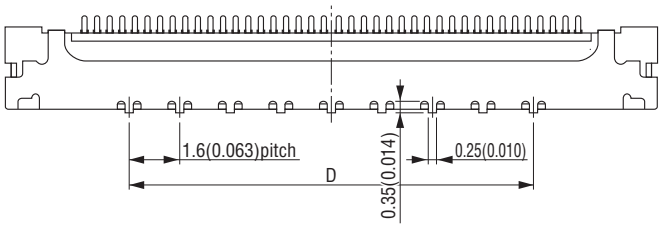

Ground Installation

No. of contacts	No. of ground
20	7
3	9
40	11

Packaging style
Embossed tape

Product Table

Part number	Number of packaging
USL00-□□L-A	500
USL00-□□L-B	1,000
USL00-□□L-C	3,000

Product Table / Dimensions

No. of contacts	Part Number	A	B	C	D	E	F
20	USL00-20L-□	12.6 (0.496)	10.1 (0.398)	7.6 (0.299)	6.4 (0.252)	0.6 (0.024)	12.8 (0.504)
30	USL00-30L-□	16.6 (0.654)	14.1 (0.555)	11.6 (0.457)	9.6 (0.378)	1.0 (0.039)	16.8 (0.661)
40	USL00-40L-□	20.6 (0.811)	18.1 (0.713)	15.6 (0.614)	12.8 (0.504)	1.4 (0.055)	20.8 (0.819)

B.C.E. S.r.l. Via Regina Pacis, 54/c - I 41049 Sassuolo (MO) Tel.: (+39) 0536 811616 - Fax.: (+39) 0536 811500 e-mail: bce@bce.it - Website: www.bce.it

USL20-□□S (Plug,Cable side connector)

Unit : mm(inch)

USL20-□□S BASE

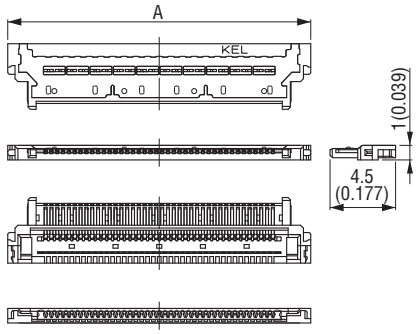

USL20-□□CV

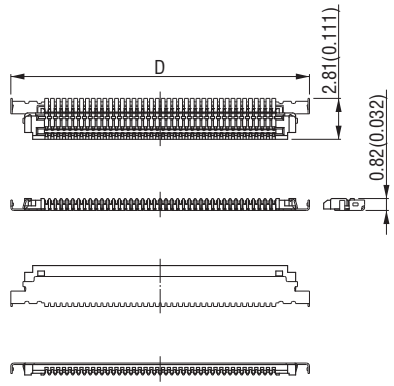

*USL20-□□SBASE and USL20-□□CV are component parts of USL20-□□S.

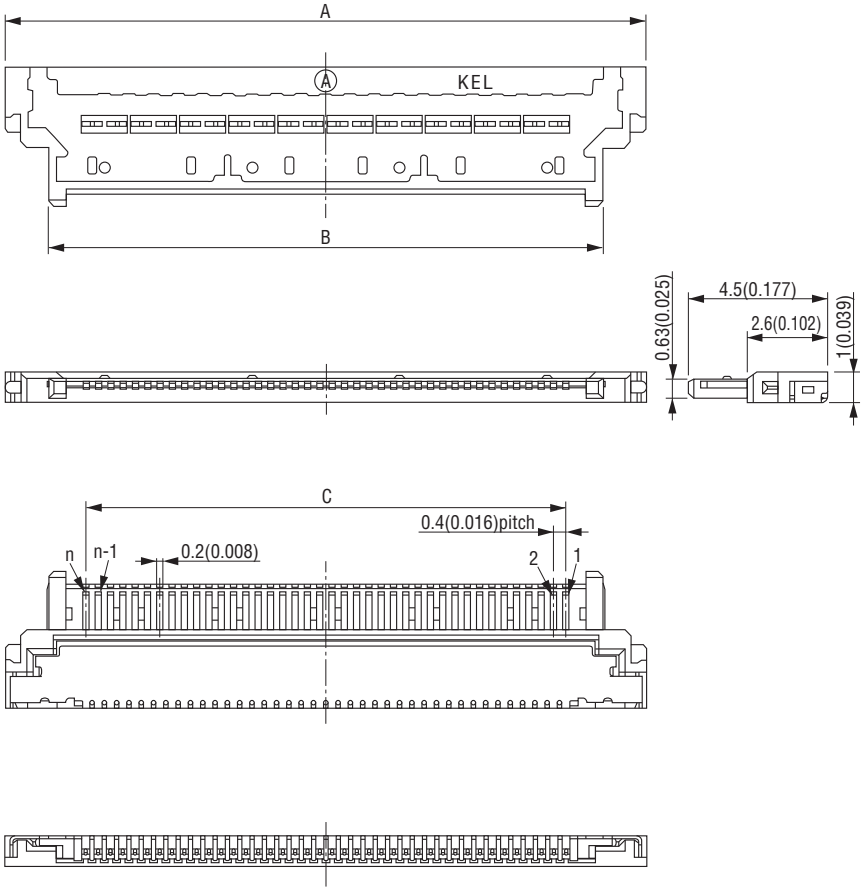

"n" is number of contacts.

Packaging style
Other

Product Table / Dimensions

No. of contacts	Part Number	A	B	C	D	Number of packaging
20	USL20-20S	12.8 (0.504)	10.1 (0.398)	7.6 (0.299)	12.5 (0.492)	2,000
30	USL20-30S	16.8 (0.661)	14.1 (0.555)	11.6 (0.457)	16.5 (0.650)	2,000
40	USL20-40S	20.8 (0.819)	18.1 (0.713)	15.6 (0.614)	20.5 (0.807)	2,000

CABLE ASSEMBLY

ORDER CODE

USL20-□□SS-□□□.□-□□(□)

① ② ③④ ⑤ ⑥ ⑦ ⑧

① 【Type】 USL20 : Plug (Cable side connector)	⑤ 【Cable length (cm)】 L : dimension (Example : 013.5=13.5cm)
② 【Number of contacts】 20 : 20 pin 30 : 30 pin 40 : 40 pin	⑥ 【Wiring code】 B : Pin 1 to Pin 1 C : Pin 1 to Pin n
③ 【Cable exit style(Left side, CN1)】 S : Straight	⑦ 【Laminated tape】 Omit : Without tape H : With tape
④ 【Cable exit style(Right side, CN2)】 S : Straight	⑧ 【Quantity】 (B) : 10 to 49pcs (C) : 50 to 99pcs (D) : 100pcs or more

*Applicable cable length : 4 to 100cm Minimum cable length for USL20-□□SS-□□□.□-BH(□) : 7cm

CABLE ASSEMBLY STYLE

Unit : mm(inch)

Wiring Code : Pin 1 to Pin 1

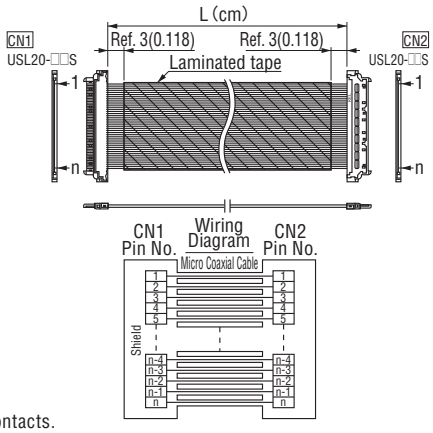

* "n" is number of contacts.

Wiring Code : Pin 1 to Pin n

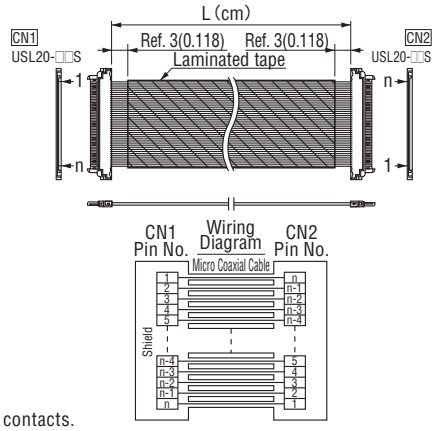

* "n" is number of contacts.

*Please contact your local KEL sales office for inquiries regarding cable length and tolerance.
*Laminated tape is designed to be a little wider than the cable width. Please contact your local KEL sales office for further details.

ORDER CODE

USL+S20-□□-□□□.□-□□(□)

① ② ③ ④ ⑤ ⑥

① 【Type】 USL+S 20 : Plug (Cable side connector) Left side connector, CN1 / USL20 series Right side connector, CN2 / USLS20 series
② 【Number of contacts】 20 : 20 pin 30 : 30 pin 40 : 40 pin
③ 【Cable length (cm)】 L : Dimension(Example : 013.5=13.5cm)
④ 【Wiring code】 B : Pin 1 to Pin 1 C : Pin 1 to Pin n
⑤ 【Laminated tape】 Omit : Without tape H : With tape
⑥ 【Quantity】(B) : 10 to 49pcs (C) : 50 to 99pcs (D) : 100pcs or more

*Applicable cable length : 4 to 100cm Minimum cable length for USL+S20-□□-□□□.□-BH(□) : 7cm

CABLE ASSEMBLY STYLE

Unit : mm(inch)

Wiring Code : Pin 1 to Pin 1

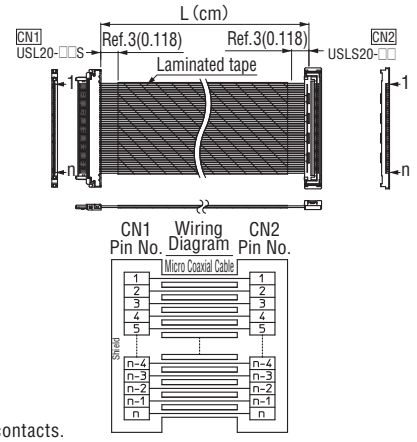

* "n" is number of contacts.

Wiring Code : Pin 1 to Pin n

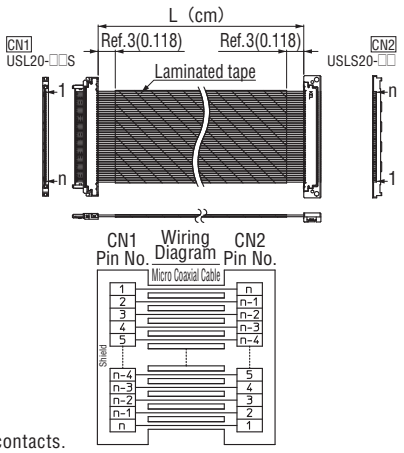

* "n" is number of contacts.

*Please contact your local KEL sales office for inquiries regarding cable length and tolerance.
*Laminated tape is designed to be a little wider than the cable width. Please contact your local KEL sales office for further details.

USLS SERIES

RoHS Compliant

0.4mm PITCH CONNECTOR FOR MICRO COAXIAL CABLE (STACKING TYPE)

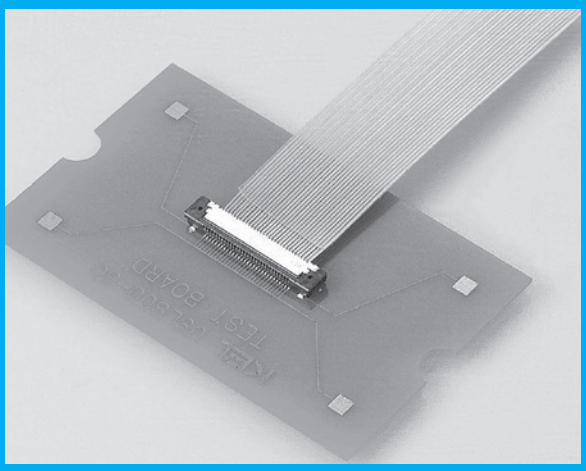

FEATURES

- Compact connector with a low profile of 1.65 mm(0.065") and a mating width of 3.05 mm(0.120").
- For micro coaxial cable (#42 AWG).
- IDC of contacts all together is adopted for improved connection reliability and more compact connectors.
- Equipped with a metal shell, noise reduction and product strength are ensured.
- Multiple ground terminals are provided for enhanced transmission characteristics and EMS protection.
- Highly reliable design with effective mating length of 0.35mm(0.014").
- Nickel barrier of the board side contact prevents solder wicking.
- Possible to put through narrow tube with a diameter of ϕ2.7mm(ϕ 0.106") even after soldering.

*Specially designed withdrawal jig is available.

ORDER CODE

USLS00-□□-□

① ② ③

*Please order in multiples of the quantity per package.

① 【Type】 USLS00 : Receptacle (PCB side connector)

② 【Number of contacts】 20 : 20 pin 30 : 30 pin 40 : 40 pin

③ 【Number of Packaging】 A : 500pcs. per reel B : 1,000pcs. per reel C : 3,000pcs. per reel

ORDER CODE

USLS20-□□

① ②

*Please order in multiples of the quantity per package.

① 【Type】 USLS20 : Plug (Cable side connector)

② 【Number of contacts】 20 : 20 pin 30 : 30 pin 40 : 40 pin

*Plug (cable side connector) is composed of base and cover.

SPECIFICATIONS

Material and plating	
Insulator material	Glass-filled LCP(UL94V-0),Black
Contact material	Copper alloy
Contact plating	Gold over Nickel Nickel Barrier(Board side)
Shell material	Copper alloy
Shell plating	Gold over Nickel(Shell 1) Tin copper over Nickel(Shell 2)
Cover material	Glass-filled LCP(UL94V-0),Black
Adsorption tape material	[USLS00] Polyimide

Electrical Characteristics	
Current rating	0.25A per contact
Contact resistance	100mΩ max.
Dielectric withstanding voltage	200V AC for 1minute
Insutulation resistance	100MΩ min.at 250V DC
Operating temperature	-40°C to +85°C
Recommended cable	#42 AWG Micro coaxial cable

Mating Drawing

Unit : mm(inch)

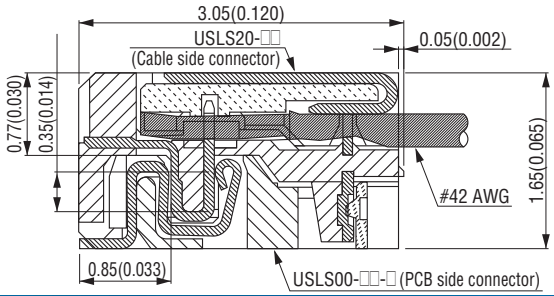

USLS00-□□-□ (Receptacle, PCB side connector)

Unit : mm(inch)

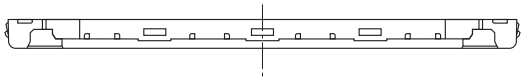

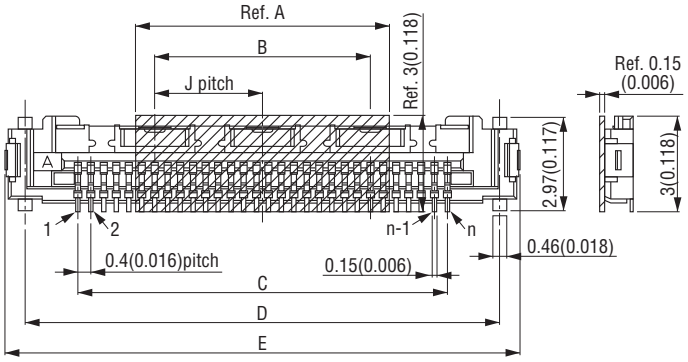

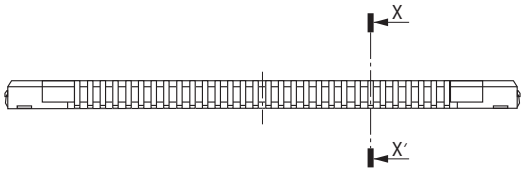

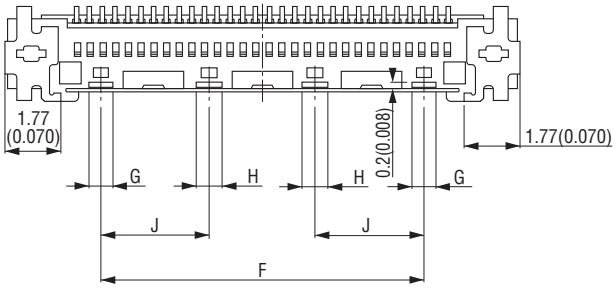

Printed Circuit Board Layout (Component Side View)

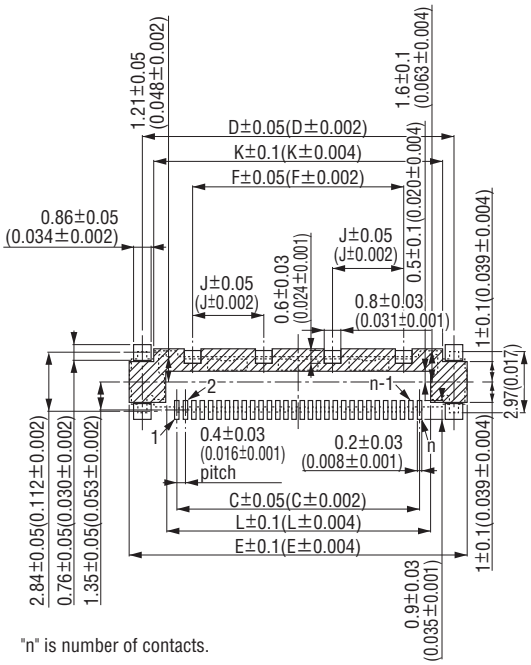

"n" is number of contacts.

X-X′Cross Section

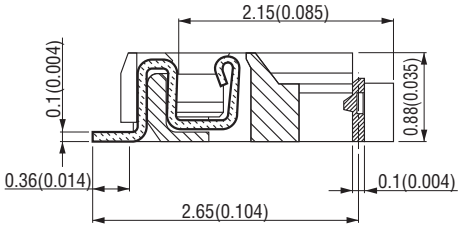

Ground Installation

No. of contacts	No. of ground
20	7
30	8
40	9

Packaging style
Embossed tape

Product Table

Part Number	Number of packaging
USLS00-□□-A	500
USLS00-□□-B	1,000
USLS00-□□-C	3,000

Product Table / Dimensions

No. of contacts	Part Number	A	B	C	D	E	F	G	H	J	K	L
20	USLS00-20-□	5.0 (0.197)	3.1 (0.122)	7.6 (0.299)	10.91 (0.430)	12.14 (0.478)	6.2 (0.244)	0.60 (0.024)	0.6 (0.024)	3.1 (0.122)	9.8 (0.386)	8.6 (0.339)
30	USLS00-30-□	8.0 (0.315)	6.8 (0.268)	11.6 (0.457)	14.91 (0.587)	16.14 (0.635)	10.1 (0.398)	0.75 (0.030)	0.8 (0.031)	3.4 (0.134)	13.8 (0.543)	12.6 (0.496)
40	USLS00-40-□	8.0 (0.315)	10.5 (0.413)	15.6 (0.614)	18.91 (0.744)	20.14 (0.793)	14.0 (0.551)	0.80 (0.031)	0.8 (0.031)	3.5 (0.138)	17.8 (0.701)	16.6 (0.654)

USLS20-□□ (Plug, Cable side connector)

Unit : mm(inch)

USLS20-□□ BASE

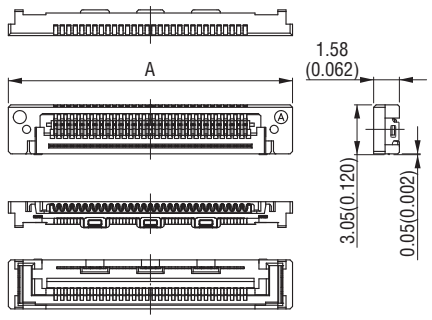

USLS20-□□CV

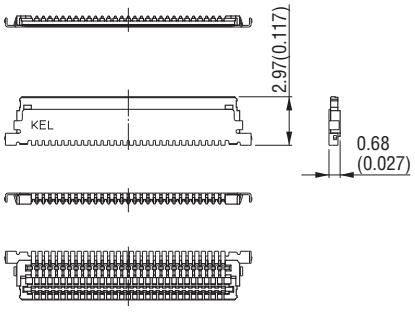

*USLS20-□□BASE and USLS20-□□CV are component parts of USLS20-□□.

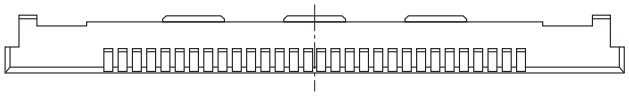

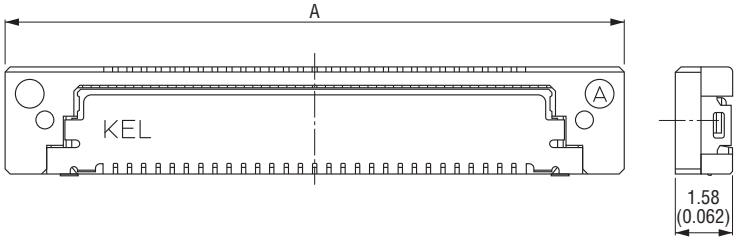

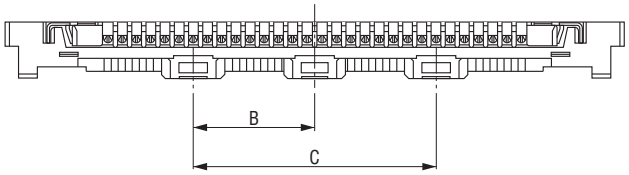

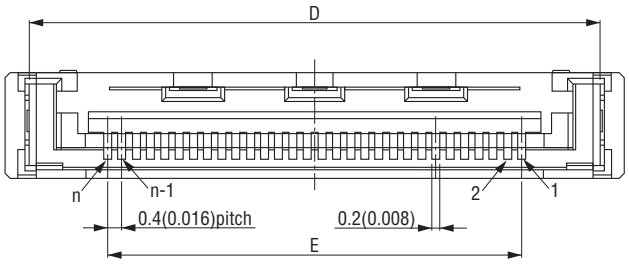

"n" is number of contacts.

Packaging style
Tray

Product Table / Dimensions

No. of contacts	Part Number	A	B	C	D	E	Number of packaging
20	USLS20-20	13.4 (0.528)	3.1 (0.122)	–	12.0 (0.472)	7.6 (0.299)	160
30	USLS20-30	17.4 (0.685)	3.4 (0.134)	6.8 (0.268)	16.0 (0.630)	11.6 (0.457)	120
40	USLS20-40	21.4 (0.843)	3.5 (0.138)	10.5 (0.413)	20.0 (0.787)	15.6 (0.614)	100

B.C.E. S.r.l. Via Regina Pacis, 54/c - I 41049 Sassuolo (MO) Tel.: (+39) 0536 811616 - Fax.: (+39) 0536 811500 e-mail: bce@bce.it - Website: www.bce.it

CABLE ASSEMBLY

ORDER CODE USLS20-□□-□□□.□-□□(□)

① ② ③ ④ ⑤ ⑥

① 【Type】 USLS20 : Plug (Cable side connector)	④ 【Wiring code】 B : Pin 1 to Pin 1 C : Pin 1 to Pin n
② 【Number of contacts】 20 : 20 pin 30 : 30 pin 40 : 40 pin	⑤ 【Laminated tape】 Omit : Without tape H : With tape
③ 【Cable length (cm)】 L : Dimension(Example : 013.5=13.5cm)	⑥ 【Quantity】(B) : 10 to 49pcs (C) : 50 to 99pcs (D) : 100pcs or more

*Applicable cable length : 4 to 100cm Minimum cable length for USLS20-□□-□□□.□-BH(□) : 7cm

CABLE ASSEMBLY STYLE

Unit : mm(inch)

Wiring Code : Pin 1 to Pin 1

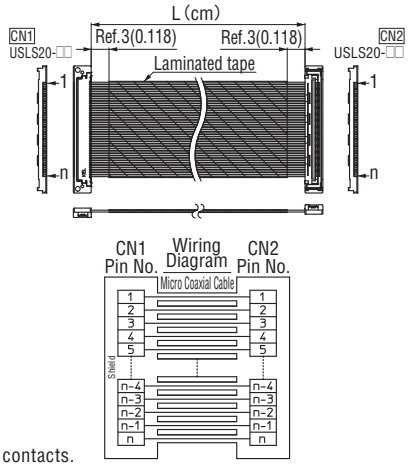

* "n" is number of contacts.

Wiring Code : Pin 1 to Pin n

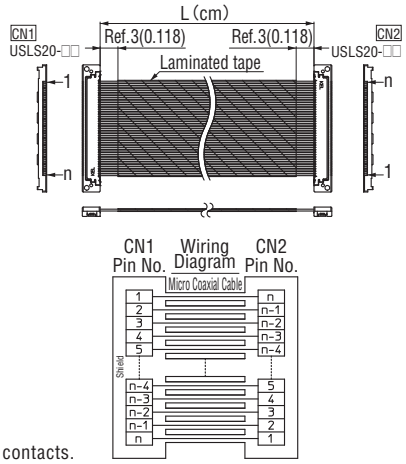

* "n" is number of contacts.

*Please contact your local KEL sales office for inquiries regarding cable length and tolerance.
*Laminated tape is designed to be a little wider than the cable width. Please contact your local KEL sales office for further details.

ORDER CODE USL+S20-□□-□□□.□-□□(□)

① ② ③ ④ ⑤ ⑥

① 【Type】 USL+S 20 : Plug (Cable side connector) Left side connector, CN1 / USL20 series Right side connector, CN2 / USLS20 series	
② 【Number of contacts】 20 : 20 pin 30 : 30 pin 40 : 40 pin	
③ 【Cable length (cm)】 L : Dimension(Example : 013.5=13.5cm)	
④ 【Wiring code】 B : Pin 1 to Pin 1 C : Pin 1 to Pin n	
⑤ 【Laminated tape】 Omit : Without tape H : With tape	
⑥ 【Quantity】(B) : 10 to 49pcs (C) : 50 to 99pcs (D) : 100pcs or more	

*Applicable cable length : 4 to 100cm Minimum cable length for USL+S20-□□-□□□.□-BH(□) : 7cm

CABLE ASSEMBLY STYLE

Unit : mm(inch)

Wiring Code : Pin 1 to Pin 1

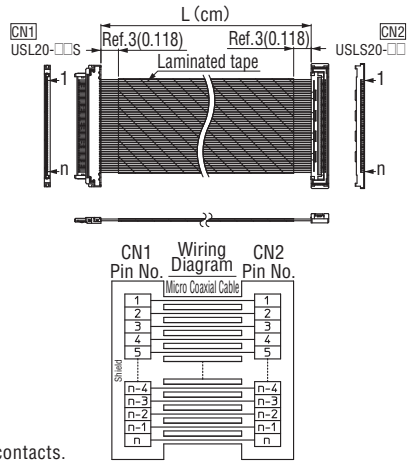

* "n" is number of contacts.

Wiring Code : Pin 1 to Pin n

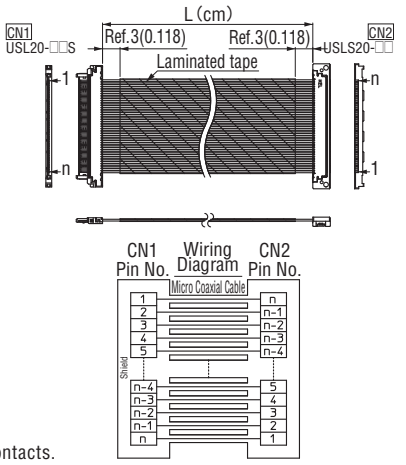

* "n" is number of contacts.

*Please contact your local KEL sales office for inquiries regarding cable length and tolerance.
*Laminated tape is designed to be a little wider than the cable width. Please contact your local KEL sales office for further details.

USLS21 SERIES

RoHS Compliant

0.4mm PITCH CONNECTOR FOR MICRO COAXIAL CABLE /SOLDERED CONNECTION (STACKING TYPE)

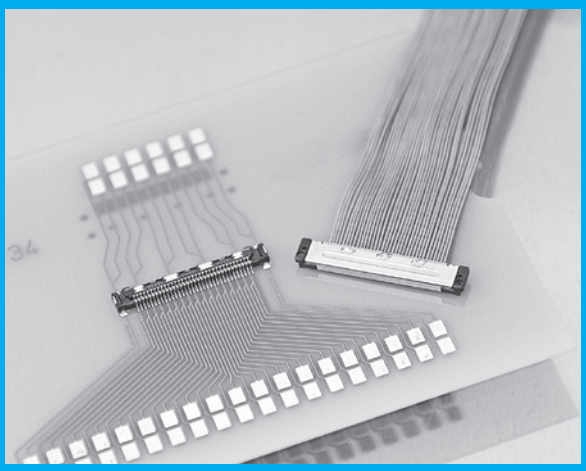

FEATURES

- Compact connector with a low profile of 1.65 mm(0.065") and a mating width of 3.05 mm(0.120").
- For micro coaxial cable(#40 AWG, #42 AWG, #44 AWG, #46 AWG).
- Provided with a soldered cable connection.
- Equipped with a metal shell, noise reduction and product strength are ensured.
- Multiple ground terminals are provided for enhanced transmission characteristics and EMS protection.
- Highly reliable design with effective mating length of 0.35mm(0.014").
- Nickel barrier of the board side contact prevents solder wicking.
- Possible to put through narrow tube with a diameter of ϕ4m-m(ϕ 0.157") even after soldering.

ORDER CODE

USLS00-34-□

① ② ③

*Please order in multiples of the quantity per package.

① 【Type】 USLS00 : Receptacle (PCB side connector)
② 【Number of contacts】 34 : 34 pin
③ 【Number of packing】 A : 500pcs. per reel B : 1,000pcs. per reel C : 3,000pcs. per reel

ORDER CODE

USLS21-34

① ②

*Please order in multiples of the quantity per package.

① 【Type】 USLS21 : Plug (Cable side connector) soldered cable connection type
② 【Number of contacts】 34 : 34 pin

*Plug(cable side connector) is composed of a base and a shell.The base is packed in embossed tape and reel (5,000pcs per reel) and the shell is packed in embossed tape and reel (10,000pcs per reel),therefore MOQ of the plug is 10,000pcs. Please contact your local KEL sales office for orders less than the MOQ 10,000pcs.

SPECIFICATIONS

Material and finish		Electrical Characteristics	
Insulator material	Glass-filled LCP(UL94V-0),Black	Current rating	0.25A per contact
Contact material	Copper alloy	Contact resistance	100mΩ max.
Contact plating	Gold over Nickel	Dielectric withstanding voltage	200V AC for 1minute
Shell material	[USLS00] Copper alloy [USLS21] Stainless	Insutulation resistance	100MΩ min.at 250V DC
		Operating temperature	-40°C to +85°C
Shell plating	Gold over Nickel	Recommended cable	#40/42/44/46 AWG Micro coaxial cables (Outermost diameter: max. 0.39 mm(0.015"))
Adsorption tape material	[USLS00] Polyimide		

Mating Drawing

Unit : mm(inch)

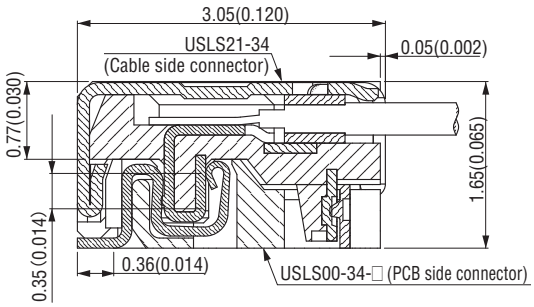

USLS00-34-□ (Receptacle, PCB side connector)

Unit : mm(inch)

Printed Circuit Board Layout (Component Side View)

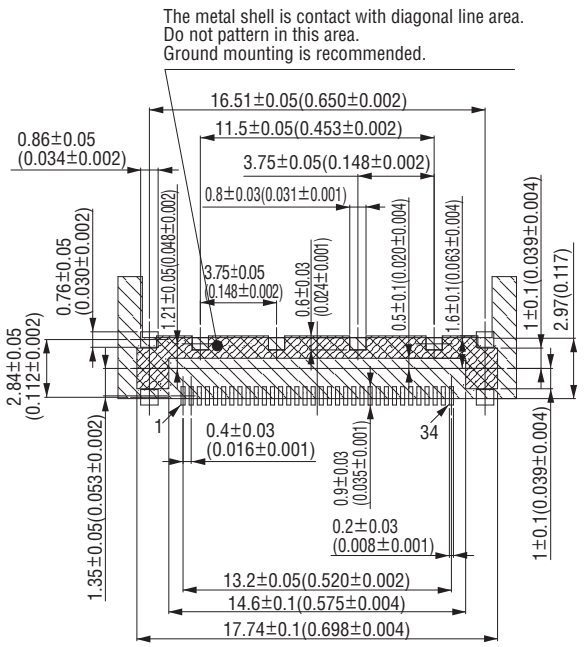

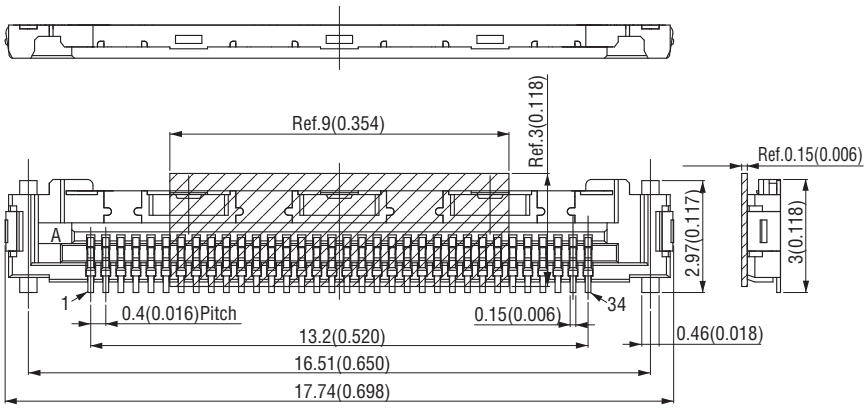

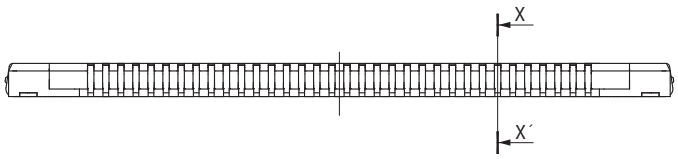

X-X′Cross Section

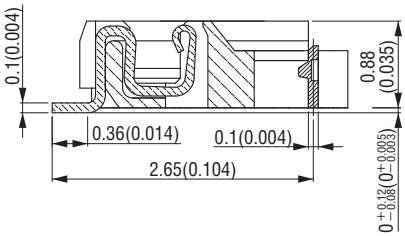

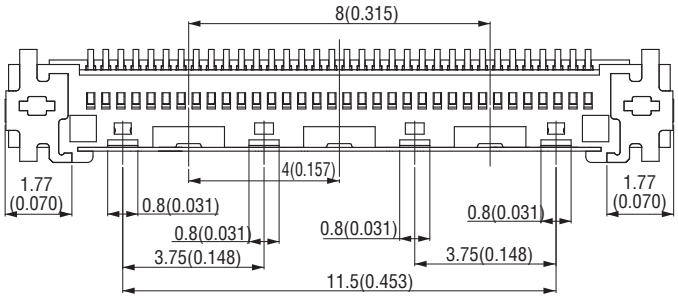

Ground Installation

No. of contacts	No. of ground
34	8

Packaging style
Embossed tape

Product Table

Part Number	Number of packaging
USLS00-34-A	500
USLS00-34-B	1,000
USLS00-34-C	3,000

USLS21-34 (Plug, Cable side connector)

Unit : mm(inch)

USLS21-34BASE

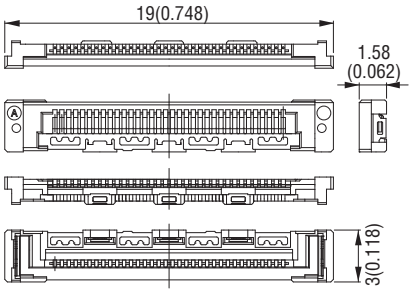

Number of packaging
5,000

USLS21-34SHELL

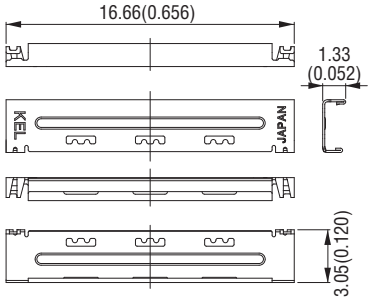

Number of packaging
10,000

*USLS21-34BASE and USL20-34SHELL are component parts of USL21-34.

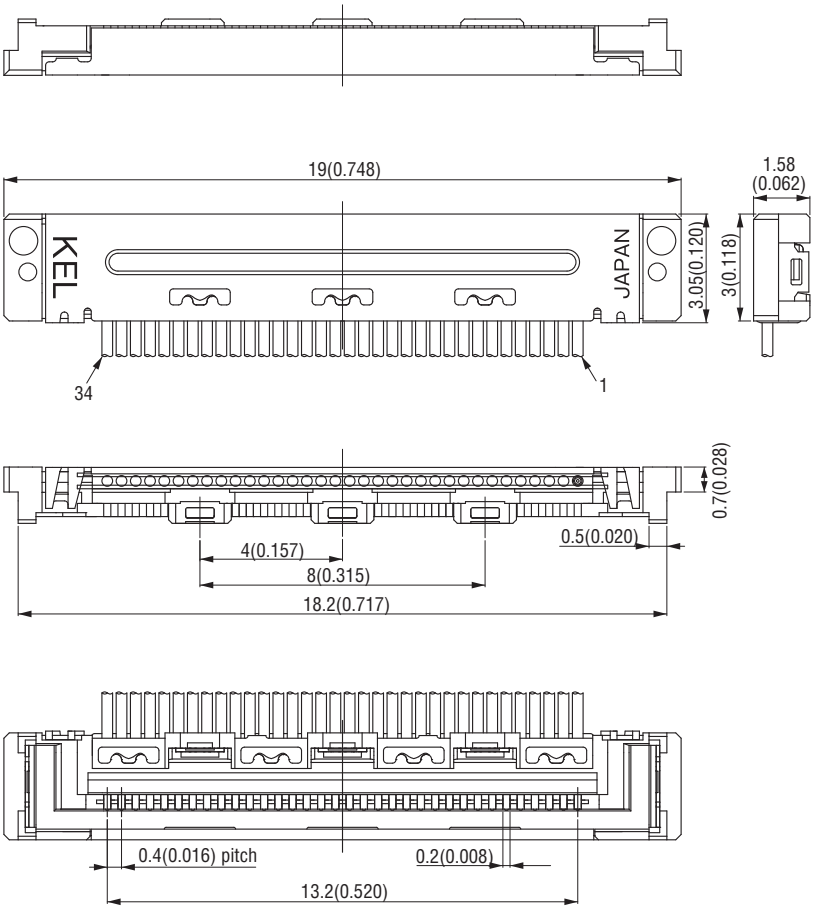

Packaging style
Other

Product Table

No. of contacts	Part Number	Number of packaging
34	USLS21-34	10,000

SSL SERIES

0.5mm PITCH CONNECTOR FOR MICRO COAXIAL CABLE

RoHS Compliant

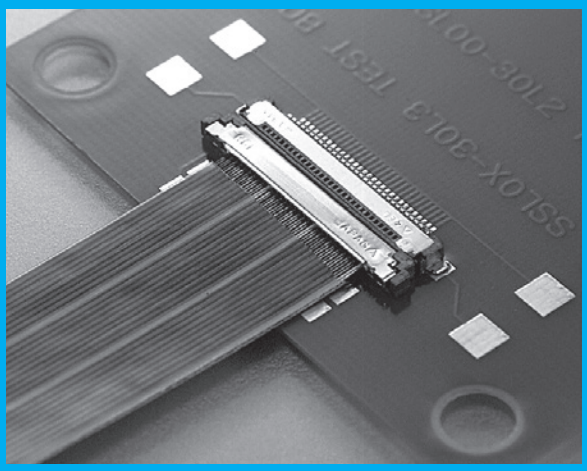

FEATURES

- Compact connector with a low profile of 1.4 mm(0.055") and a mating width of 6.08 mm(0.239").
- For micro coaxial cable(#40 AWG).
- IDC of contacts all together is adopted for improved connection reliability and more compact connectors.
- Equipped with a metal shell, noise reduction and product strength are ensured.
- Multiple ground terminals are provided for enhanced transmission characteristics and EMS protection.
- Highly reliable design with effective mating length of 0.5mm(0.020").

ORDER CODE

SSL0□-□□□□-□□□□□□

① ② ③ ④

*Please order in multiples of the quantity per package.

①	【Type】 Receptacle (PCB side connector) **SSL00 :** Without positioning posts **SSL01 :** With positioning posts (Right angle only)
②	【Number of contacts】 **10 :** 10 pin **20 :** 20 pin **30 :** 30 pin **40 :** 40 pin
③	【Contact taill style】 **L3 :** Right angle **S :** Straight
④	【Number of packaging】 **0500 :** 500pcs./1 reel **1000 :** 1000pcs./1 reel **1500 :** 1500pcs./1 reel(Straight only) **3000 :** 3000pcs./1 reel (Right angle only)

ORDER CODE

SSL20-□□SB

① ② ③ ④

*Please order in multiples of the quantity per package.

①	【Type】 **SSL20 :** Plug (cable side connector)
②	【Number of contacts】 **10 :** 10 pin **20 :** 20 pin **30 :** 30 pin **40 :** 40 pin
③	【Cable exit style】 **S :** Straight
④	【Recommended cable】 **B :** #40 AWG Micro coaxial cable

*Plug (cable side connector) is composed of base and shell.

SPECIFICATIONS

Material and plating		Electrical Characteristics	
Insulator material	Glass-filled LCP(UL94V-0),Black	Current rating	0.3A per contact
Contact material	Copper alloy	Contact resistance	100mΩ max.
Contact plating	Gold over Nickel	Dielectric withstanding voltage	200V AC for 1minute
Shell material	Copper alloy	Insutulation resistance	100MΩ min.at 250V DC
Shell plating	Tin copper over Nickel	Operating temperature	-40°C to +85°C
IDC cover material	[SSL20]Glass-filled LCP (UL94V-0), Off-white	Recommended cable	#40 AWG Micro coaxial cable

Mating Drawing

Unit : mm(inch)

◆Horizontal Mating

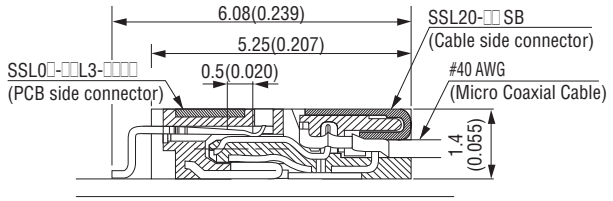

◆Vertical Mating

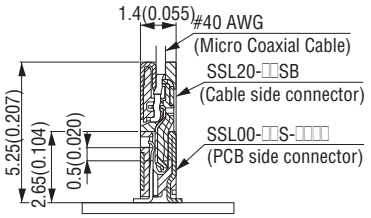

SSL0□-□□L3-□□□□ (Receptacle, PCB side connector, Right angle)

Unit : mm(inch)

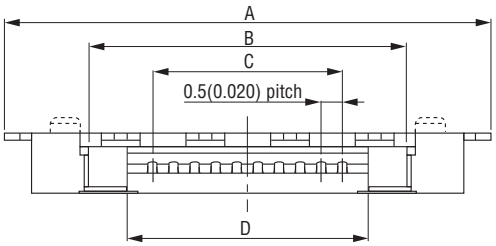

Printed Circuit Board Layout (Component Side View)

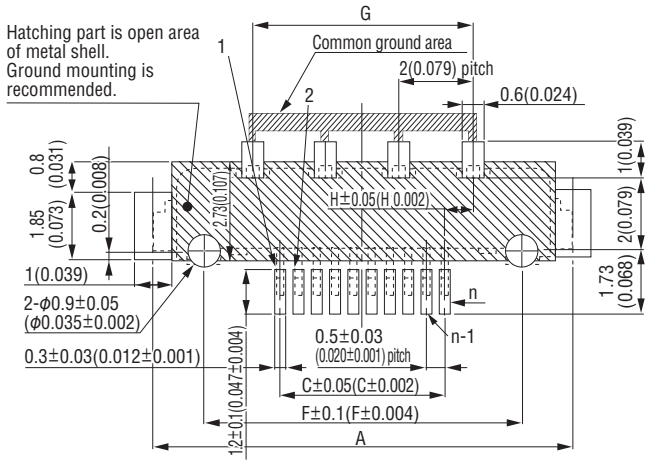

"n" is number of contacts.

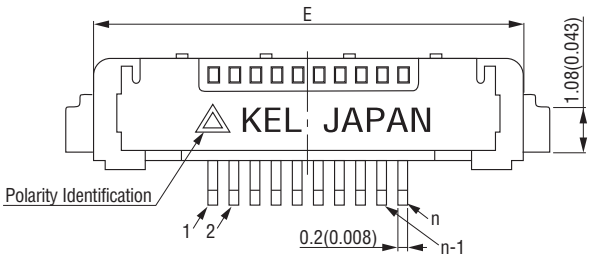

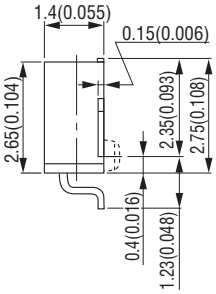

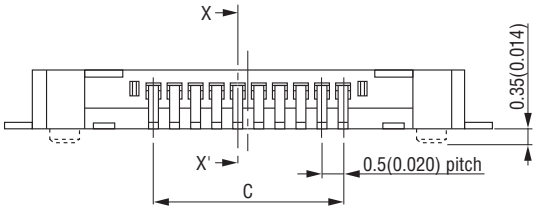

X-X′Cross Section

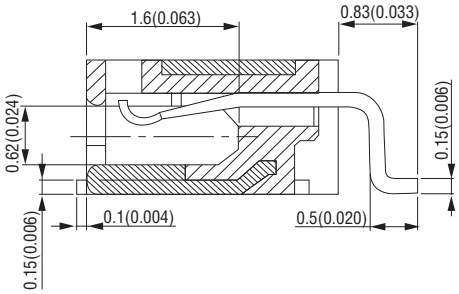

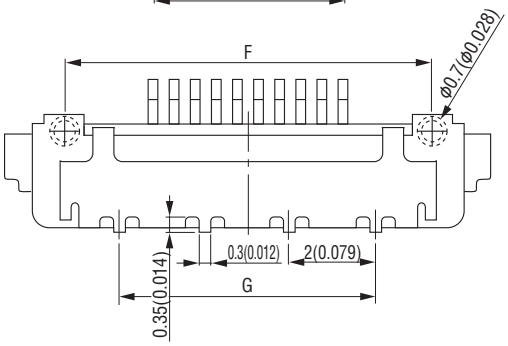

Ground Installation

No. of contacts	No. of ground
10	6
20	8
30	11
40	13

Packaging style
Embossed tape

Product Table

Part Number	Number of packaging
SSL0□-□□L3-0500	500
SSL0□-□□L3-1000	1,000
SSL0□-□□L3-3000	3,000

Product Table / Dimensions

No. of contacts	Part Number	A	B	C	D	E	F	G	H
10	SSL0□-10L3-□□□□	11.4 (0.449)	7.5 (0.295)	4.5 (0.177)	5.7 (0.224)	10.1 (0.398)	8.6 (0.339)	6.0 (0.236)	0.75 (0.030)
20	SSL0□-20L3-□□□□	16.4 (0.646)	12.5 (0.492)	9.5 (0.374)	10.7 (0.421)	15.1 (0.594)	13.6 (0.535)	10.0 (0.394)	0.25 (0.010)
30	SSL0□-30L3-□□□□	21.4 (0.843)	17.5 (0.689)	14.5 (0.571)	15.7 (0.618)	20.1 (0.791)	18.6 (0.732)	16.0 (0.630)	0.75 (0.030)
40	SSL0□-40L3-□□□□	26.4 (1.039)	22.5 (0.886)	19.5 (0.768)	20.7 (0.815)	25.1 (0.988)	23.6 (0.929)	20.0 (0.787)	0.25 (0.010)

SSL00-□□S-□□□□ (Receptacle, PCB side connector, Straight)

Unit : mm(inch)

Printed Circuit Board Layout (Component Side View)

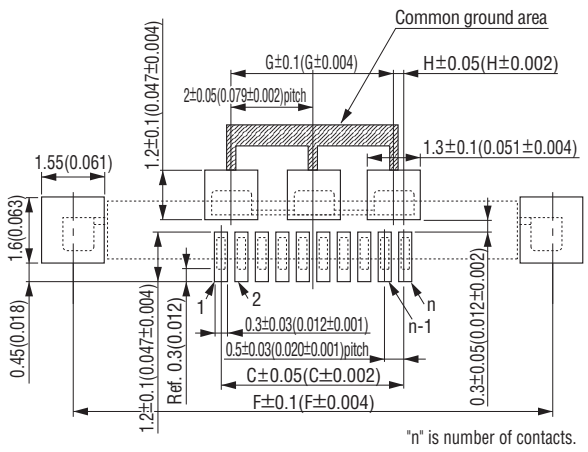

"n" is number of contacts.

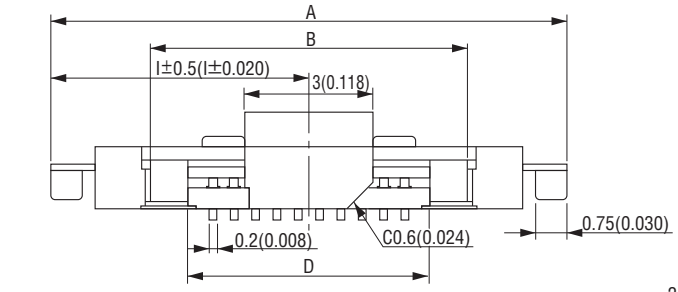

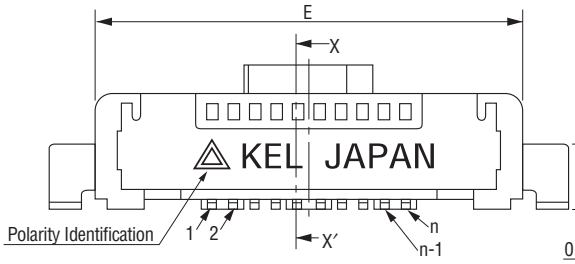

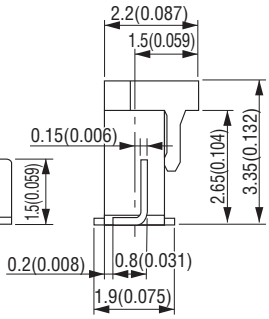

X-X′Cross Section

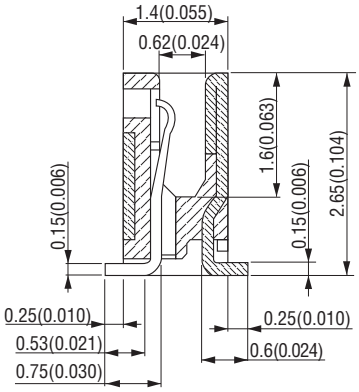

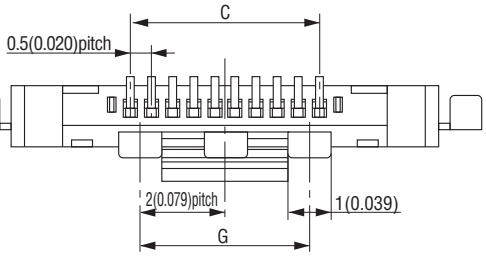

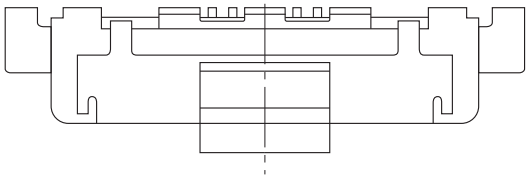

Ground Installation

No. of contacts	No. of ground
10	5
20	7
30	10
40	12

Packaging style
Embossed tape

Product Table

Part Number	Number of packaging
SSL00-□□S-0500	500
SSL00-□□S-1000	1,000
SSL00-□□S-1500	1,500

Product Table / Dimensions

No. of contacts	Part Number	A	B	C	D	E	F	G	H	I
10	SSL00-10S-□□□□	12.2 (0.480)	7.5 (0.295)	4.5 (0.177)	5.7 (0.224)	10.1 (0.398)	11.75 (0.463)	4.0 (0.157)	0.25 (0.010)	6.1 (0.240)
20	SSL00-20S-□□□□	17.2 (0.677)	12.5 (0.492)	9.5 (0.374)	10.7 (0.421)	15.1 (0.594)	16.75 (0.659)	8.0 (0.315)	0.75 (0.030)	8.6 (0.339)
30	SSL00-30S-□□□□	22.2 (0.874)	17.5 (0.689)	14.5 (0.571)	15.7 (0.618)	20.1 (0.791)	21.75 (0.856)	14.0 (0.551)	0.25 (0.010)	11.1 (0.437)
40	SSL00-40S-□□□□	27.2 (1.071)	22.5 (0.886)	19.5 (0.768)	20.7 (0.815)	25.1 (0.988)	26.75 (1.053)	18.0 (0.709)	0.75 (0.030)	13.6 (0.535)

B.C.E. S.r.l. Via Regina Pacis, 54/c - I 41049 Sassuolo (MO) Tel.: (+39) 0536 811616 - Fax.: (+39) 0536 811500 e-mail: bce@bce.it - Website: www.bce.it

SSL20-□□SB (Plug, Cable side connector)

Unit : mm(inch)

SSL20-□□SB BASE

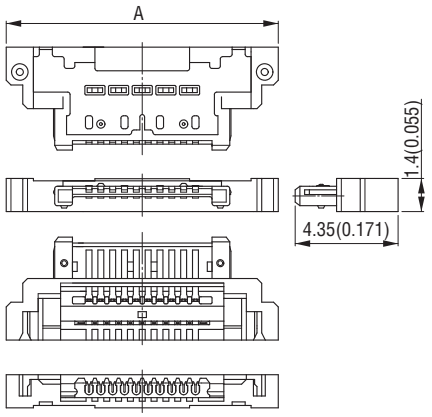

SSL20-□□CV2

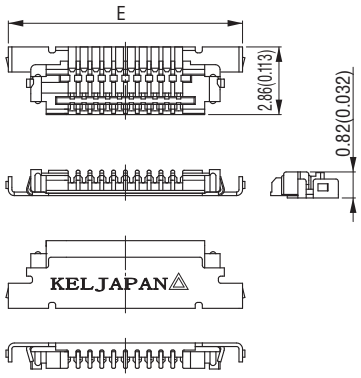

*SSL20-□□SB BASE and SSL20-□□CV2 are component parts of SSL20-□□SB.

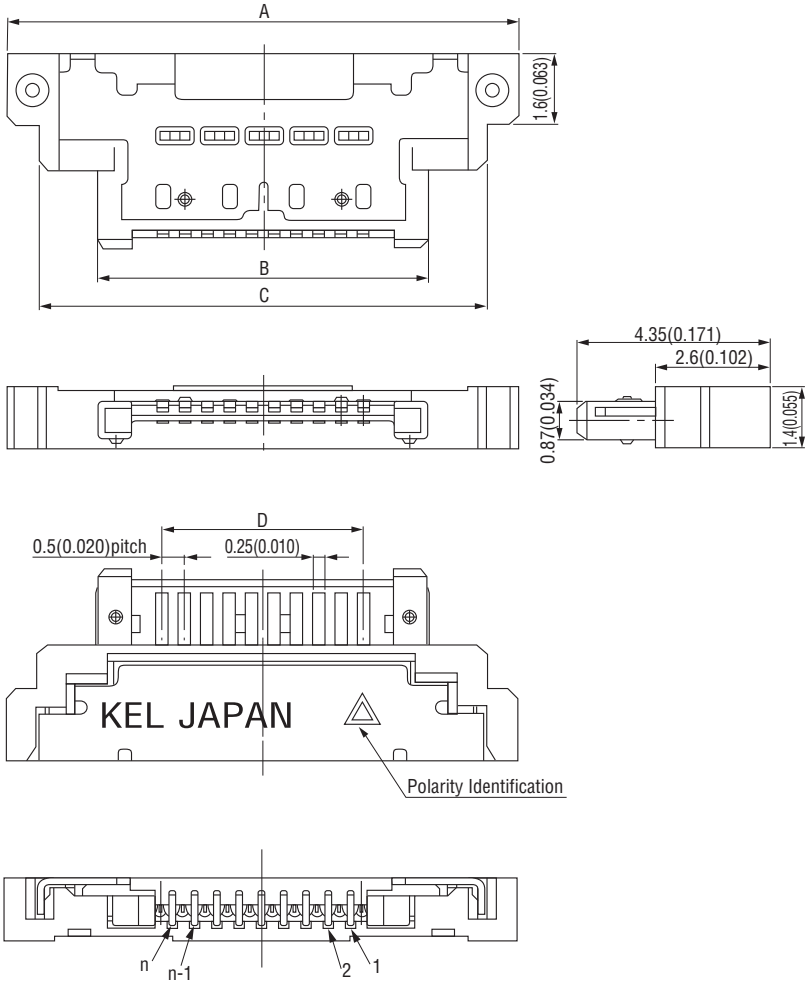

"n" is number of contacts.

Packaging style
Tray

Product Table / Dimensions

No. of contacts	Part Number	A	B	C	D	E	Number of packaging
10	SSL20-10SB	11.5 (0.453)	7.5 (0.295)	10.1 (0.398)	4.5 (0.177)	9.9 (0.390)	160
20	SSL20-20SB	16.5 (0.650)	12.5 (0.492)	15.1 (0.594)	9.5 (0.374)	14.9 (0.587)	120
30	SSL20-30SB	21.5 (0.846)	17.5 (0.689)	20.1 (0.791)	14.5 (0.571)	19.9 (0.783)	100
40	SSL20-40SB	26.5 (1.043)	22.5 (0.886)	25.1 (0.988)	19.5 (0.768)	24.9 (0.980)	80

CABLE ASSEMBLY

ORDER CODE

SSL20-□□SSB-□□□.□-□□(□)

① ② ③④⑤ ⑥ ⑦⑧ ⑨

①	【Type】 SSL20 : Plug (Cable side connector)
②	【Number of contacts】 10 : 10 pin 20 : 20 pin 30 : 30 pin 40 : 40 pin
③	【Cable exit style(Left side, CN1)】 S : Straight
④	【Cable exit style(Right side, CN2)】 S : Straight
⑤	【Recommended Cable】 B : #40 AWG Micro coaxial cable
⑥	【Cable length(cm)】 L : Dimension (Example:013.5=13.5cm)
⑦	【Wiring code】 B : Pin 1 to Pin 1 C : Pin 1 to Pin n
⑧	【Laminated tape】 Omit : Without tape H : With tape
⑨	【Quantity】(B) : 10 to 49pcs (C) : 50 to 99pcs (D) : 100pcs or more

*Applicable cable length : 5 to 100cm Minimum cable length for SSL20-□□SSB-□□□.□-BH(□) : 7cm

CABLE ASSEMBLY STYLE

Unit : mm(inch)

Wiring Code : Pin 1 to Pin 1

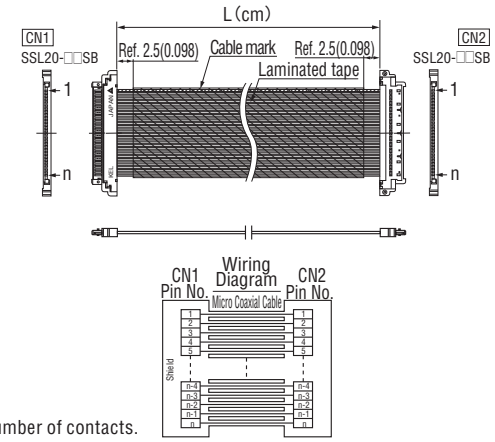

* "n" is number of contacts.

Wiring Code : Pin 1 to Pin n

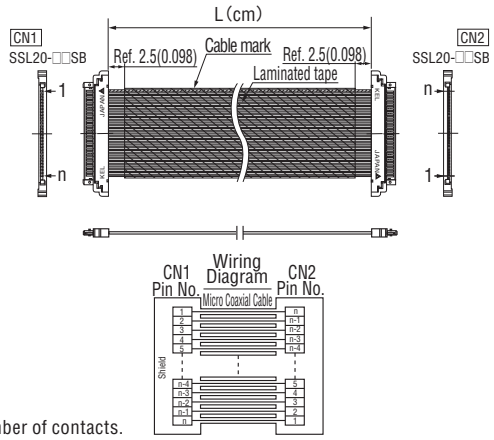

* "n" is number of contacts.

*Please contact your local KEL sales office for inquiries regarding cable length and tolerance.
*Laminated tape is designed to be a little wider than the cable width. Please contact your local KEL sales office for further details.

TMC SERIES

RoHS Compliant

0.5mm PITCH CONNECTOR FOR MICRO COAXIAL CABLE / FOR HIGH-SPEED DIFFERENTIAL TRANSMISSION

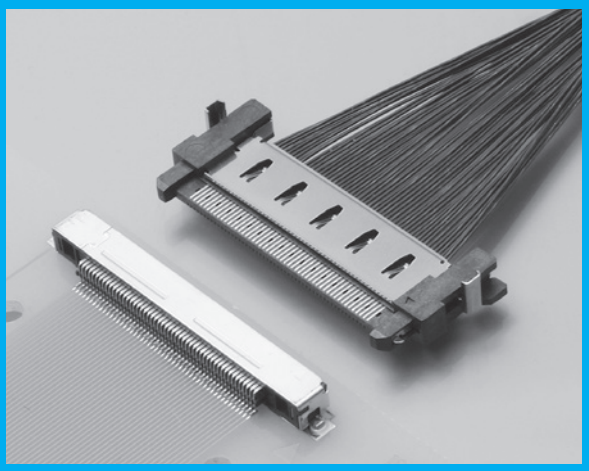

FEATURES

- Applied for high speed differential transmission.(TMDS, LVDS)
- Provided with a soldered cable connection.
- For micro coaxial cable(#40 AWG).
- Equipped with a metal shell, noise reduction and product strength are ensured.
- Multiple ground terminals are provided for enhanced transmission characteristics and EMS protection.
- Highly reliable design with effective mating length of 1.0mm(0.039").
- Provided with a locking mechanism for secure locking and easy insertion/release.

*Additional common ground bar can be applied to provide a more stabilized transmission characteristic. Please contact your local KEL sales office.

ORDER CODE

TMC01-51□-□

① ② ③ ④

*Please order in multiples of the quantity per package.

① 【Type】 TMC01 : Receptacle (PCB side connector)
② 【Number of contacts】 51 : 51 pin
③ 【Contact taill style】 L : Right angle S : Straight
④ 【Number of packing】 A : 500pcs./1 reel B : 1000pcs./1 reel

ORDER CODE

TMC21-51-1

① ② ③

*Please order in multiples of the quantity per package.

① 【Type】 TMC21 : Plug (cable side connector)
② 【Number of contacts】 51 : 51 pin
③ 【Lock style】 1

*Plug (cable side connector) is composed of base and shell.

SPECIFICATIONS

Material and plating	
Insulator material	Glass-filled LCP(UL94V-0),Black
Contact material	Copper alloy
Contact plating	Gold over Nickel
Shell material	[TMC01/TMC21BASE] Copper alloy
Shell plating	[TMC01/TMC21BASE] Pure Tin over Nickel
Plug upper shell material	[TMC21COVER] Stainless steel (No plating)
Adsorption tape material	[TMC01 S type] Polyimide

Electrical Characteristics	
Current rating	0.3A per contact
Contact resistance	50mΩ max.
Dielectric withstanding voltage	200V AC for 1minute
Insutulation resistance	100MΩ min. at 250V DC
Operating temperature	-40°C to +85°C
Recommended cable	#40 AWG Micro coaxial cables

Mating Drawing

Unit : mm(inch)

Horizontal Mating

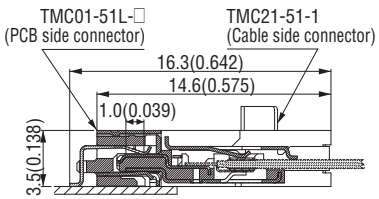

Vertical Mating

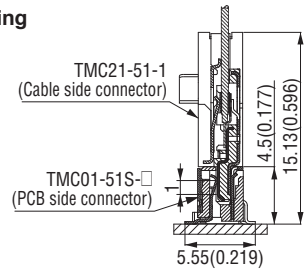

TMC01-51L-□ (Receptacle, PCB side connector, Right angle)

Unit : mm(inch)

Printed Circuit Board Layout (Component Side View)

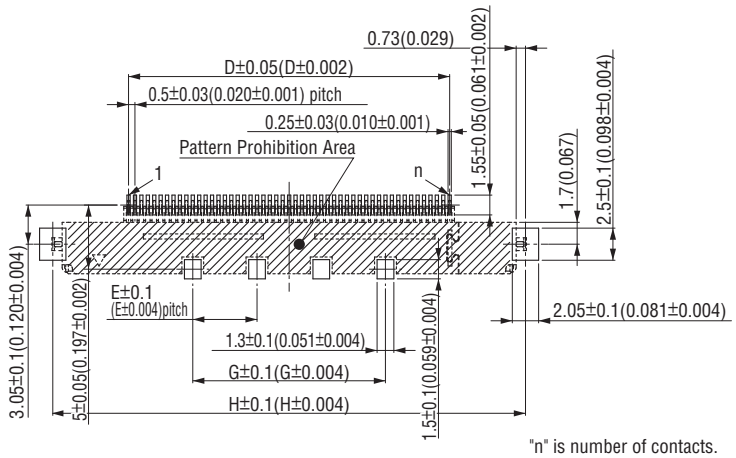

"n" is number of contacts.

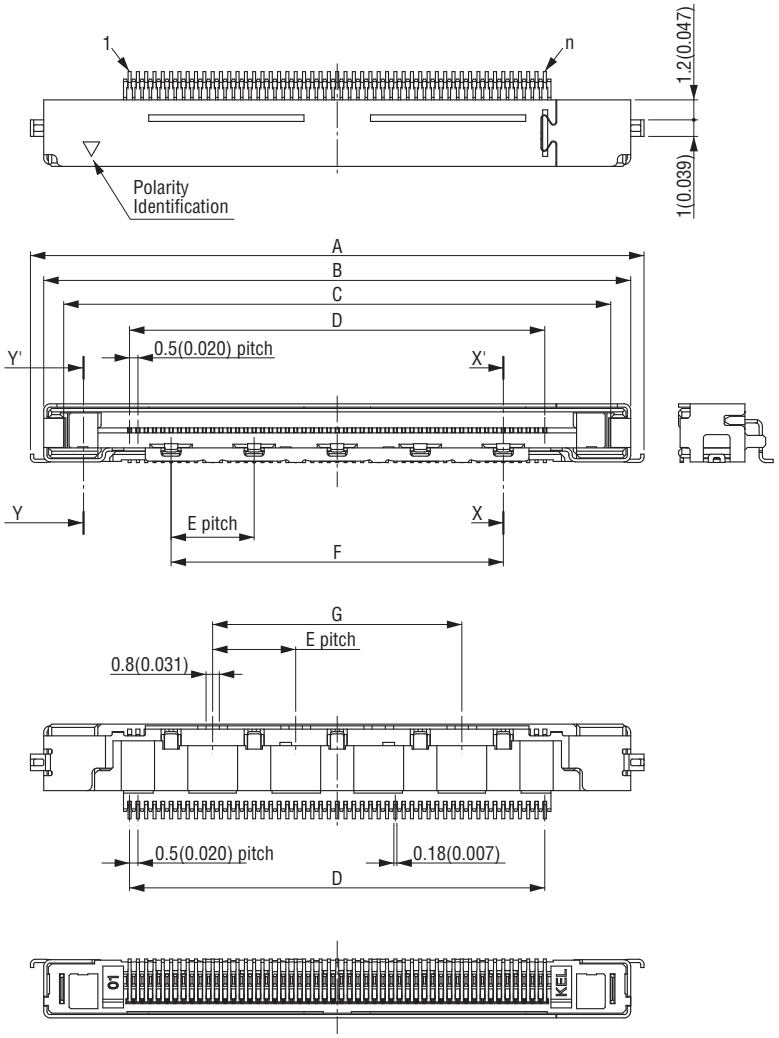

X-X′Cross Section

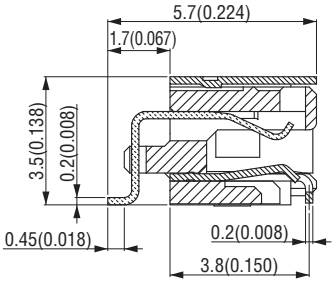

Y-Y′Cross Section

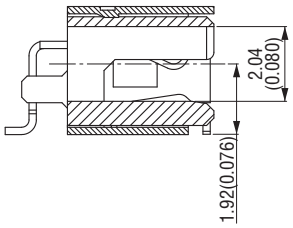

Ground Installation

No. of contacts	No. of ground
51	6

Packaging style
Embossed tape

Product Table

Part Number	Number of packaging
TMC01-51L-A	500
TMC01-51L-B	1,000

Product Table / Dimensions

No. of contacts	Part Number	A	B	C	D	E	F	G	H
51	TMC01-51L-□	36.94 (1.454)	35.34 (1.391)	32.94 (1.297)	25 (0.984)	5 (0.197)	20 (0.787)	15 (0.591)	36.8 (1.449)

B.C.E. S.r.l. Via Regina Pacis, 54/c - I 41049 Sassuolo (MO) Tel.: (+39) 0536 811616 - Fax.: (+39) 0536 811500 e-mail: bce@bce.it - Website: www.bce.it

TMC01-51S-□ (Receptacle, PCB side connector, Straight)

Unit : mm(inch)

Printed Circuit Board Layout (Component Side View)

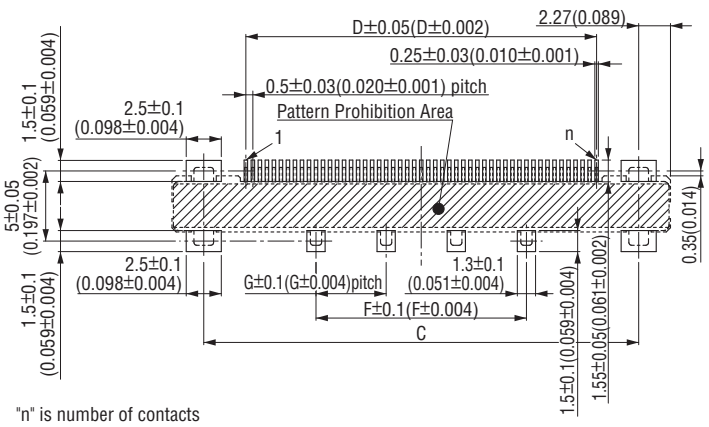

"n" is number of contacts

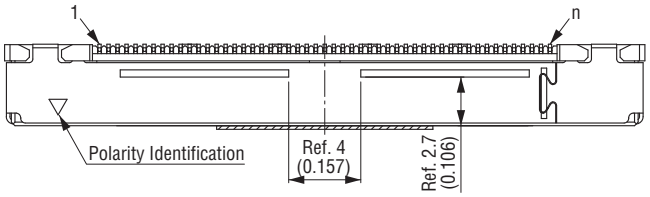

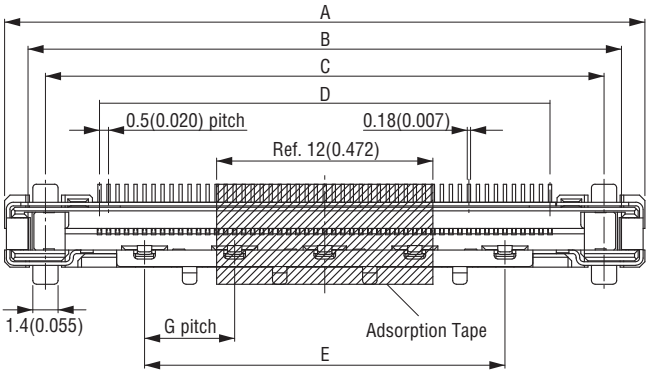

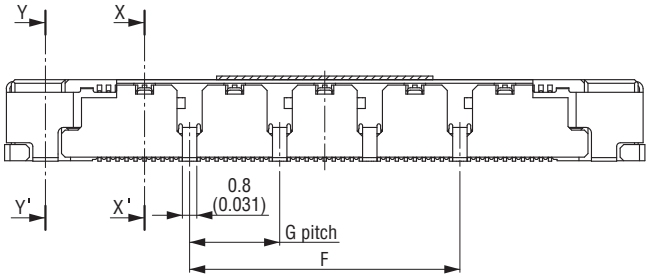

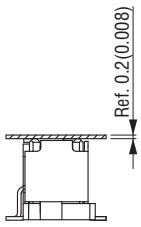

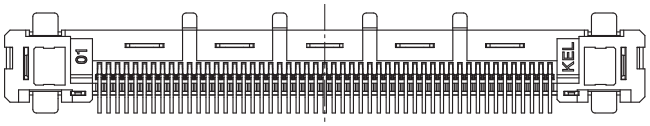

X-X′Cross Section

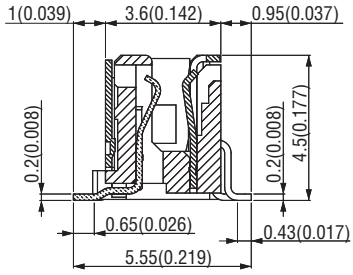

Y-Y′Cross Section

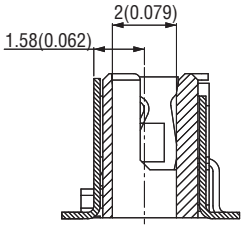

Ground Installation

No. of contacts	No. of ground
51	6

Packaging style
Embossed tape

Product Table

Part Number	Number of packaging
TMC01-51S-A	500
TMC01-51S-B	1,000

Product Table / Dimensions

No. of contacts	Part Number	A	B	C	D	E	F	G
51	TMC01-51S-□	35.54 (1.399)	32.94 (1.297)	31 (1.220)	25 (0.984)	20 (0.787)	15 (0.591)	5 (0.197)

TMC21-51-1 (Plug, Cable side connector)

Unit : mm(inch)

TMC21-51 BASE

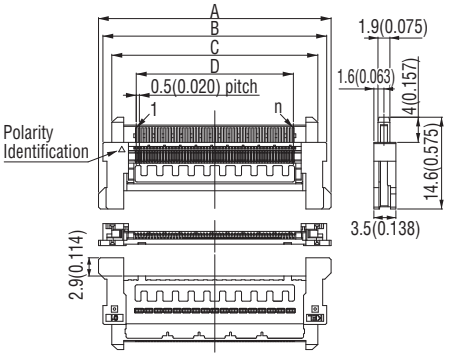

Product Table

A	B	C	D
37 (1.457)	35.6 (1.402)	32.78 (1.291)	25 (0.984)

TMC21-51SHELLP2-1

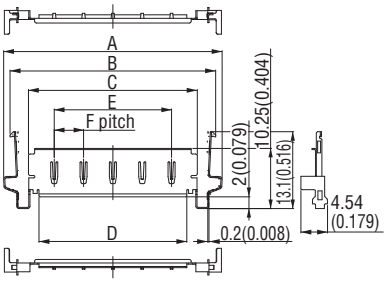

Product Table

A	B	C	D	E	F
37.24 (1.466)	35.06 (1.380)	28.78 (1.133)	25.2 (0.992)	20.5 (0.807)	5 (0.197)

*TMC21-51 BASE and TMC21-51SHELLP2 are component parts of TMC21-51-1.

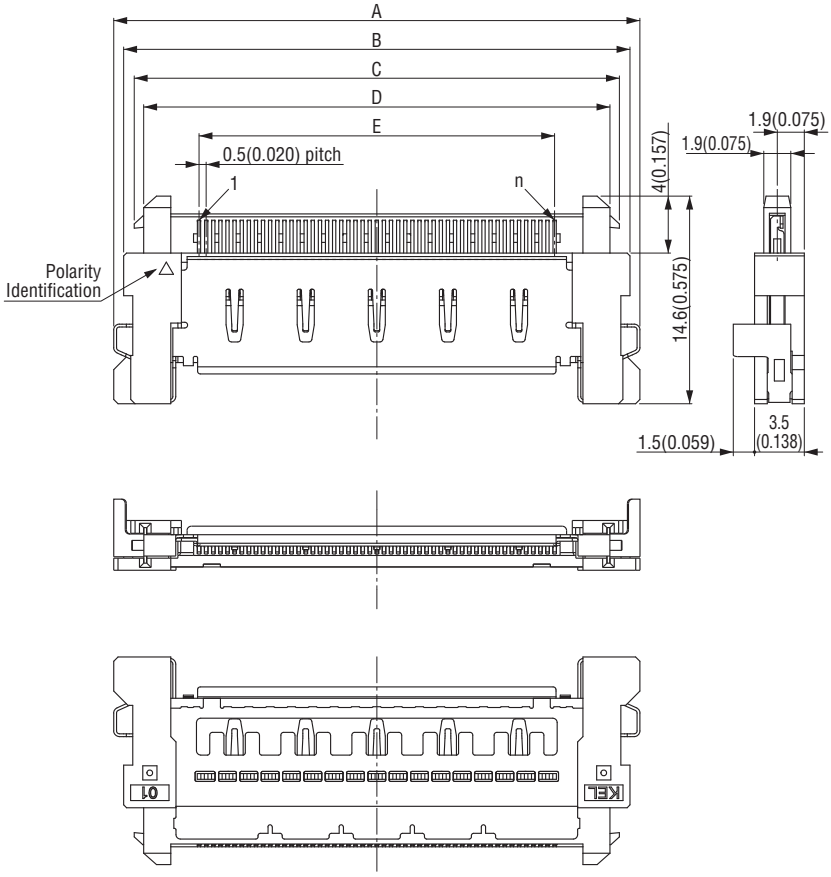

"n" is number of contacts

X-X′Cross Section

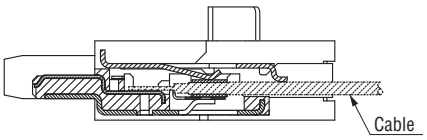

Packaging style
Tray

Product Table / Dimensions

No. of contacts	Part Number	A	B	C	D	E	Number of packaging
51	TMC21-51-1	37 (1.457)	35.6 (1.402)	34.12 (1.343)	32.78 (1.291)	25 (0.984)	60

8929E SERIES

1.27mm PITCH CONNECTOR FOR DISCRETE CABLE/ CRIMP TYPE

RoHS Compliant

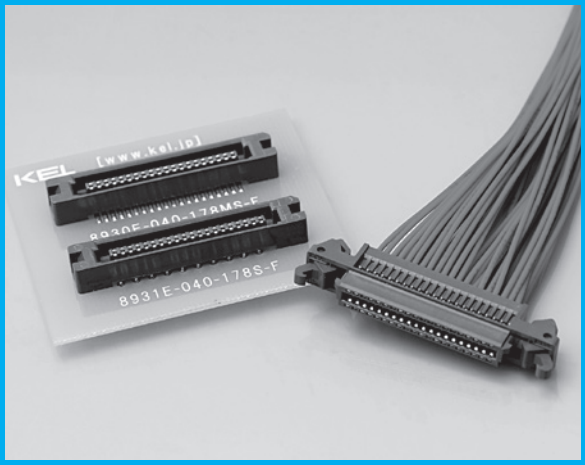

FEATURES

- Highly reliable contact design with independent and synchronized spring.
- Low insertion and withdrawal force.
- Insulator protects contacts from damage.
- Connectors with the Eject-Lock mechanism, allowing one-handed insertion and release.
- PCB side connector 8930E/8931E series can be mated with 8900 board to board connector series as mating combination.
- For discrete cable. (#26 AWG, #28 AWG and #30 AWG)

ORDER CODE

8929E - □□□

① ②

*Please order in multiples of the quantity per package.

① 【Type】 **8929E :** Receptacle(Cable side connector)

② 【Number of contacts】 **030 :** 30 pin **040 :** 40 pin **050 :** 50 pin **060 :** 60 pin **068 :** 68 pin

*Above order code 8929E-□□□ is for the housing only, contact terminals are sold separately. About #569 order code, Please refer next page.

ORDER CODE

893□E - □□□ - 178□□ - F

① ② ③ ④ ⑤

*Please order in multiples of the quantity per package.

① 【Type】 Plug(PCB side connector) **8930E :** Without hooks, SMT **8931E :** With hooks, Through hole

② 【Number of contacts】 **030 :** 30pin **040 :** 40pin **050 :** 50pin **060 :** 60pin **068 :** 68pin

③ 【Contact name】 **178**

④ 【Contact tail style】 **S :** Straight, Through hole **L :** Right angle, Through hole **MS :** Straight, SMT (8930E)

⑤ 【RoHS】 **F :** RoHS Compliant

SPECIFICATIONS

Material and plating	
Insulator material	[8929E] Glass-filled Nylon 66 (UL 94V-0), Brown [8930E/8931E] Glass-filled PPS (UL 94V-0), Brown
Contact material	Copper alloy
Contact plating	[8929E] (Contact area) Gold over Nickel (Crimping area) Tin over Nickel [893□E] Gold over Nickel
Lock material	Glass-filled Nylon 66 (UL 94V-0), Brown
Retention clip material	Copper alloy
Retention clip plating	Tin copper over Nickel

Electrical Characteristics	
Current rating	1A per contact
Contact resistance	50mΩ max.
Dielectric withstanding voltage	[8929E] 300V AC for 1 minute [893□E] 650V AC for 1 minute
Insulation resistance	[8929E] 1000MΩ min. at 250V DC [893□E] 1000MΩ min. at 500V DC
Operating temperature	-40°C to +85°C
Recommended cable	#26/28/30 AWG Discrete wire cable (insulation Dia. : ϕ1mm(0.039") max.)

Contact Terminal

Unit : mm(inch)

◆**Contact terminal for 8929E-□□□ receptacle (Cable side connector)**

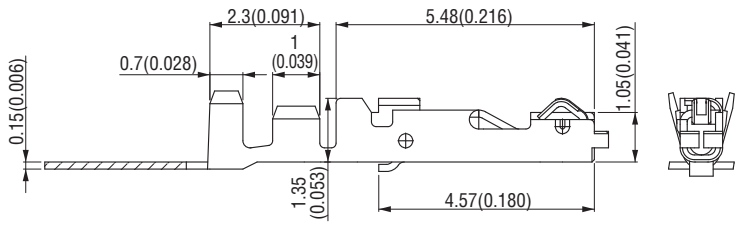

ORDER CODE **#569**

①

*Please order in multiples of the quantity per package.

① **【Contact name】**
#569 : Crimping type contact for 8929E

Packaging style
Tape & Reel

Product Table

Part Number	Number of packaging
#569	20,000

Assembly Tool

Hand Tool

Part Number	CH-03
Mating Cable	#26 AWG, #28 AWG, #30 AWG
Mating Contact	#569

*Insulation Dia. : ϕ1mm max.

Crimping Machine

Mating Contact	#569
Manufacturer	JAPAN AUTOMATIC MACHINE CO., LTD
Crimping Machine	LPC220S
Applicator	DFS790800

A crimping machine and applicator are available for purchase from Japan Automatic Machine Co., Ltd.

8929E-□□□ (Receptacle, Cable side connector, Housing)

Unit : mm(inch)

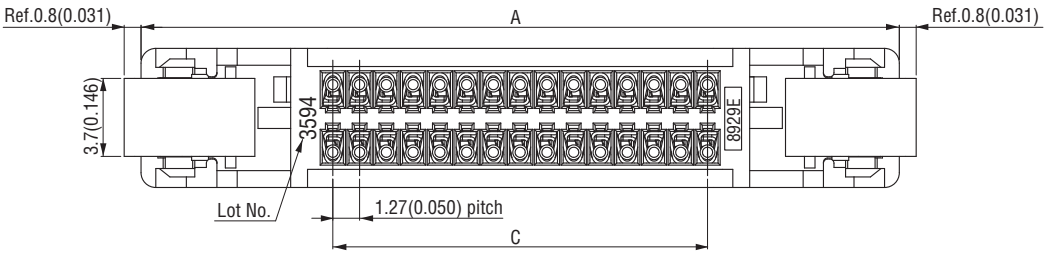

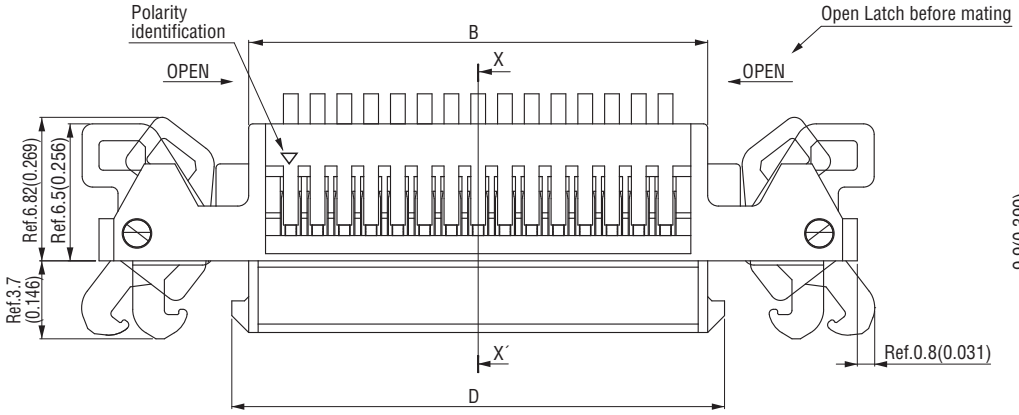

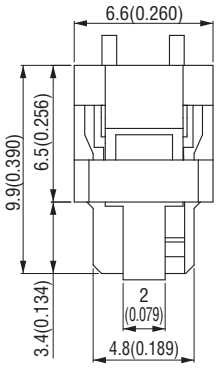

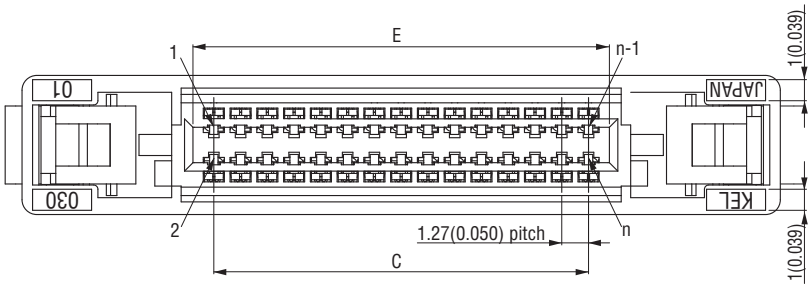

X-X′Cross Section

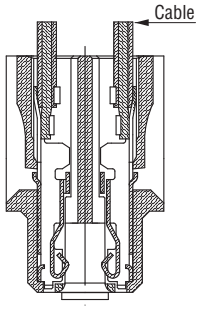

Packaging style
Pipe

Product Table / Dimensions

No. of contacts	Part Number	A	B	C	D	E	Number of packaging
30	8929E-030	35.78 (1.409)	21.78 (0.857)	17.78 (0.700)	23.38 (0.920)	19.78 (0.779)	13
40	8929E-040	42.13 (1.659)	28.13 (1.107)	24.13 (0.950)	29.73 (1.170)	26.13 (1.029)	11
50	8929E-050	48.48 (1.909)	34.48 (1.357)	30.48 (1.200)	36.08 (1.420)	32.48 (1.279)	10
60	8929E-060	54.83 (2.159)	40.83 (1.607)	36.83 (1.450)	42.43 (1.670)	38.83 (1.529)	9
68	8929E-068	59.91 (2.359)	45.91 (1.807)	41.91 (1.650)	47.51 (1.870)	43.91 (1.729)	8

8931E-□□□-178S-F (Plug, PCB side connector, Straight , With hooks)

Unit : mm(inch)

Printed Circuit Board Layout (Component Side View)

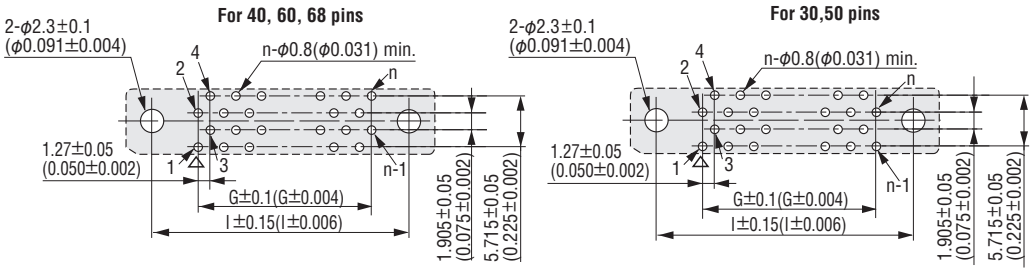

Recommended PCB Thickness $t=1.6^{+0.2}_{-0.1}$ $(0.063^{+0.008}_{-0.004})$ ▽ =Polarity identification

"n" is number of contacts.

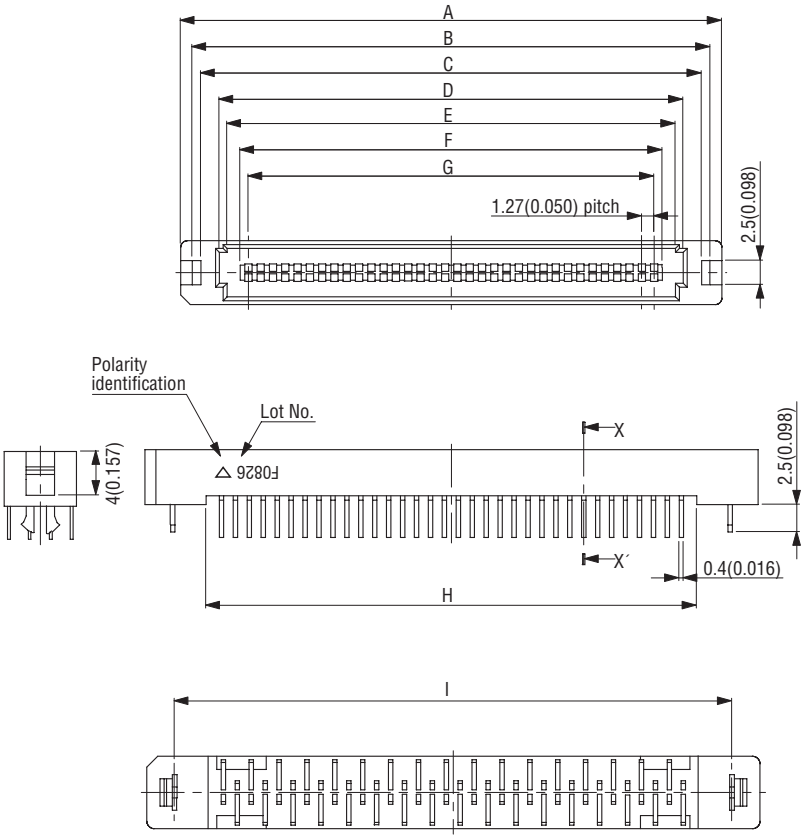

X-X′Cross Section

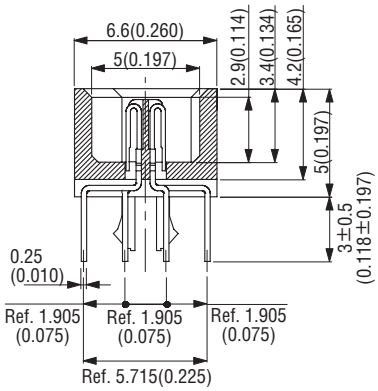

Packaging style
Pipe

Product Table / Dimensions

No. of contacts	Part Number	A	B	C	D	E	F	G	H	I	Number of packaging
30	8931E-030-178S-F	31.78 (1.251)	29.38 (1.157)	27.58 (1.086)	23.78 (0.936)	22.18 (0.873)	19.48 (0.767)	17.78 (0.700)	20.58 (0.810)	26.67 (1.050)	16
40	8931E-040-178S-F	38.13 (1.501)	35.73 (1.407)	33.93 (1.336)	30.13 (1.186)	28.53 (1.123)	25.83 (1.017)	24.13 (0.950)	26.93 (1.060)	33.02 (1.300)	13
50	8931E-050-178S-F	44.48 (1.751)	42.08 (1.657)	40.28 (1.586)	36.48 (1.436)	34.88 (1.373)	32.18 (1.267)	30.48 (1.200)	33.28 (1.310)	39.37 (1.550)	11
60	8931E-060-178S-F	50.83 (2.001)	48.43 (1.907)	46.63 (1.836)	42.83 (1.686)	41.23 (1.623)	38.53 (1.517)	36.83 (1.450)	39.63 (1.560)	45.72 (1.800)	10
68	8931E-068-178S-F	55.91 (2.201)	53.51 (2.107)	51.71 (2.036)	47.91 (1.886)	46.31 (1.823)	43.61 (1.717)	41.91 (1.650)	44.71 (1.760)	50.80 (2.000)	9

8931E-□□□-178L-F (Plug, PCB side connector, Right angle, With hooks)

Unit : mm(inch)

Printed Circuit Board Layout (Component Side View)

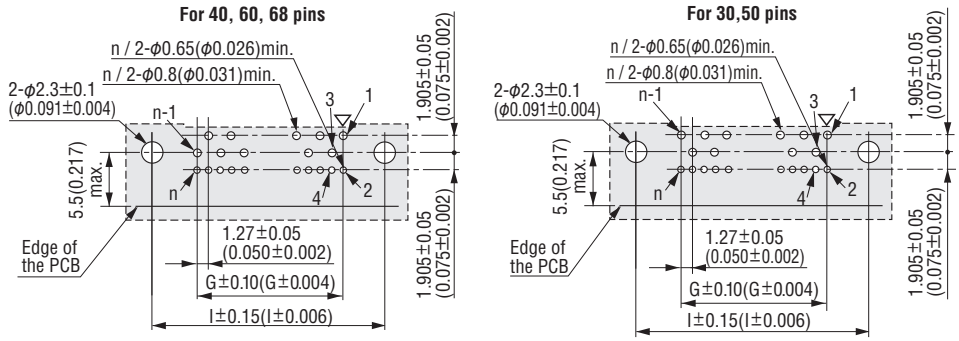

Recommended PCB Thickness t=1.6 $^{+0.2}_{-0.1}$ (0.063 $^{+0.008}_{-0.004}$) ▽ =Polarity identification

"n" is number of contacts.

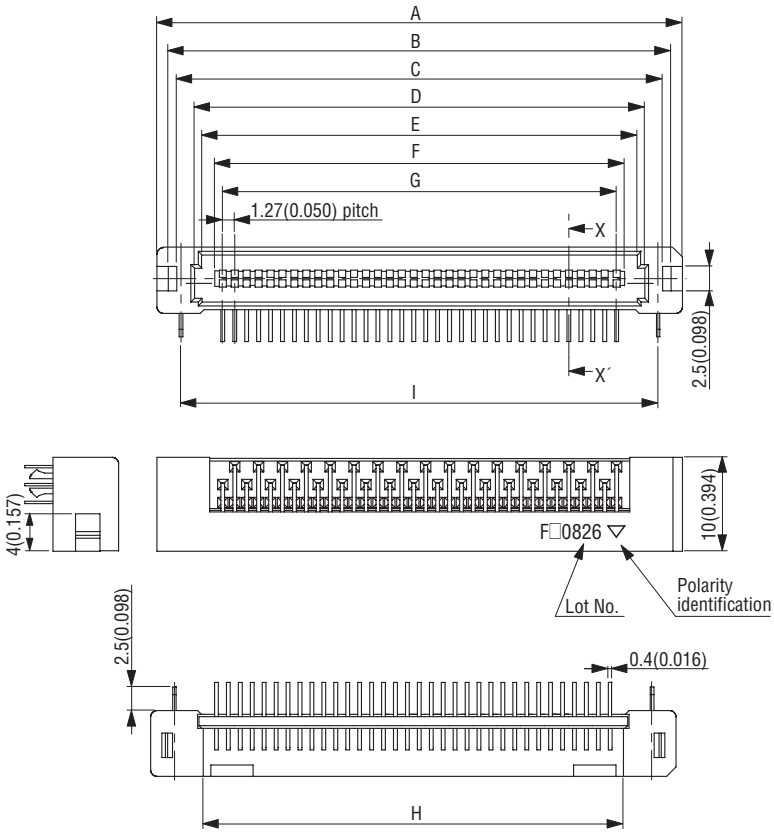

X-X′Cross Section

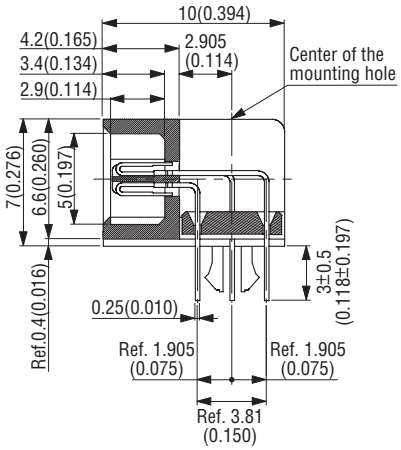

Packaging style
Pipe

Product Table / Dimensions

No. of contacts	Part Number	A	B	C	D	E	F	G	H	I	Number of packaging
30	8931E-030-178L-F	31.78 (1.251)	29.38 (1.157)	27.58 (1.086)	23.78 (0.936)	22.18 (0.873)	19.48 (0.767)	17.78 (0.700)	20.58 (0.810)	26.67 (1.050)	16
40	8931E-040-178L-F	38.13 (1.501)	35.73 (1.407)	33.93 (1.336)	30.13 (1.186)	28.53 (1.123)	25.83 (1.017)	24.13 (0.950)	26.93 (1.060)	33.02 (1.300)	13
50	8931E-050-178L-F	44.48 (1.751)	42.08 (1.657)	40.28 (1.586)	36.48 (1.436)	34.88 (1.373)	32.18 (1.267)	30.48 (1.200)	33.28 (1.310)	39.37 (1.550)	11
60	8931E-060-178L-F	50.83 (2.001)	48.43 (1.907)	46.63 (1.836)	42.83 (1.686)	41.23 (1.623)	38.53 (1.517)	36.83 (1.450)	39.63 (1.560)	45.72 (1.800)	10
68	8931E-068-178L-F	55.91 (2.201)	53.51 (2.107)	51.71 (2.036)	47.91 (1.886)	46.31 (1.823)	43.61 (1.717)	41.91 (1.650)	44.71 (1.760)	50.80 (2.000)	9

B.C.E. S.r.l. Via Regina Pacis, 54/c - I 41049 Sassuolo (MO) Tel.: (+39) 0536 811616 - Fax.: (+39) 0536 811500 e-mail: bce@bce.it - Website: www.bce.it

8930E-□□□-178MS-F (Plug, PCB side connector, Straight, SMT)

Unit : mm(inch)

Printed Circuit Board Layout (Component Side View)

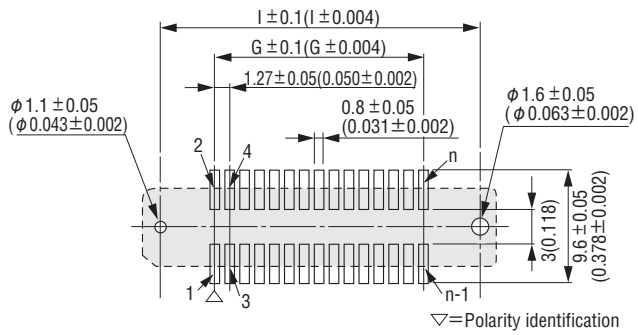

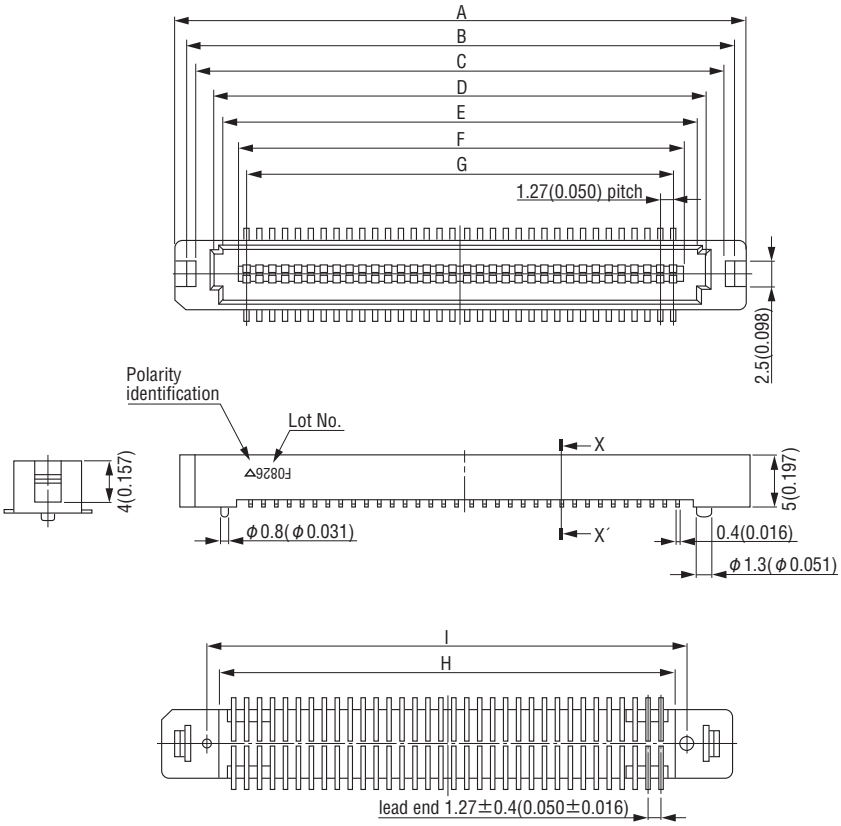

X-X′Cross Section

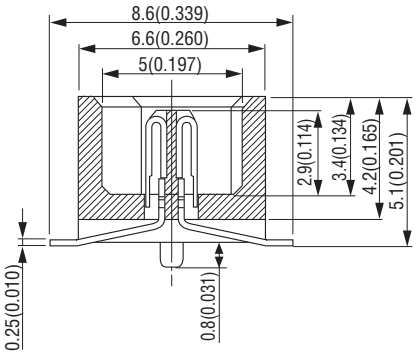

Packaging style
Pipe

Product Table / Dimensions

No. of contacts	Part Number	A	B	C	D	E	F	G	H	I	Number of packaging
30	8930E-030-178MS-F	31.78 (1.251)	29.38 (1.157)	27.58 (1.086)	23.78 (0.936)	22.18 (0.873)	19.48 (0.767)	17.78 (0.700)	20.58 (0.810)	22.86 (0.900)	16
40	8930E-040-178MS-F	38.13 (1.501)	35.73 (1.407)	33.93 (1.336)	30.13 (1.186)	28.53 (1.123)	25.83 (1.017)	24.13 (0.950)	26.93 (1.060)	29.21 (1.150)	13
50	8930E-050-178MS-F	44.48 (1.751)	42.08 (1.657)	40.28 (1.586)	36.48 (1.436)	34.88 (1.373)	32.18 (1.267)	30.48 (1.200)	33.28 (1.310)	35.56 (1.400)	11
60	8930E-060-178MS-F	50.83 (2.001)	48.43 (1.907)	46.63 (1.836)	42.83 (1.686)	41.23 (1.623)	38.53 (1.517)	36.83 (1.450)	39.63 (1.560)	41.91 (1.650)	10
68	8930E-068-178MS-F	55.91 (2.201)	53.51 (2.107)	51.71 (2.036)	47.91 (1.886)	46.31 (1.823)	43.61 (1.717)	41.91 (1.650)	44.71 (1.760)	46.99 (1.850)	9

FTC SERIES

RoHS Compliant

5.08 mm PITCH DRAWER CONNECTOR/TWO CABLES CRIMPABLE TYPE

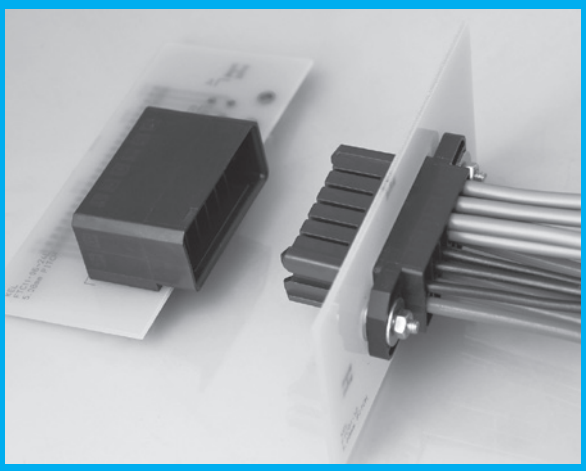

FEATURES

- This connector allows two cables to be crimped into one contact.
- Applicable with the crimping cable AWG #14/16/18/20.
- The cable crimped terminal can be connected to anywhere of the contact housing.
- Two cable crimping can transfer the power supply between connectors. i.e. Daisy chain connection
- Two cables crimping saves space by reducing the number of contact.
- Absorbs ±3 mm(0.118") gap in XY directions.
- Movement of the screwed part of the cable connector can absorb maximum ±0.7 mm in the XY direction in mating condition.
- Highly reliable design with an effective mating length of 3 mm.
- Twin-Leaf Pinching 2 point contact structure prevents buckling of the contact and improves reliability with a stable contact force.

ORDER CODE

FTC01-12

① ②

*Please order in multiples of the quantity per package.

① 【Type】 FTC01 : Receptacle (Cable side connector)

② 【Number of contacts】 12 : 12

*Above order code FTC01-12 is for housing only, contact terminals are sold separately. About contact order code, please refer next page.

ORDER CODE

FTC11-12 L F

① ② ③ ④

*Please order in multiples of the quantity per package.

① 【Type】 FTC11: Plug (PCB side connector)

② 【Number of contacts】 12 : 12

③ 【Contact tail style】 L : Right angle

④ 【Gold plating thickness】 F : 0.38 μ m min.

SPECIFICATIONS

Material and plating	
Insulator material	Glass-filled PBT (UL94V-0), Black
Contact material	Copper alloy
Contact plating	[FTC01] (Contact area) Gold over Nickel (Crimping area) Nickel [FTC11] Gold over Nickel
Material of mounting bracket	Copper alloy
Fitting finish	Gold plating finish
Washer/Rivet material	Stainless steel

Electrical Characteristics	
Current rating	[AWG #14/16] 8.5A per contact [AWG #18] 7.5A per contact [AWG #20] 7.0A per contact
Contact resistance	10 mΩ max.
Dieelectric withstanding voltage	2,200V AC for 1 minute.
Insulation resistance	1,000 MΩ min. at 500V DC
Operating temperature	-55°C to +105°C
Durability of insertion and withdrawal	500 times
Recommended cable	#14/16/18/20 AWG Discrete wire cables (Outer diameter of cable coating: Φ1.8 to Φ3.4mm)
Tensile strength of crimped part	[AWG #14/16] 190N min. [AWG #18] 120N min. [AWG #20] 75 N min.

Contact Terminal

Unit : mm(inch)

◆Crimp contact for FTC01-12 (Cable side connector) [Recommended cable size: 1M/1L]

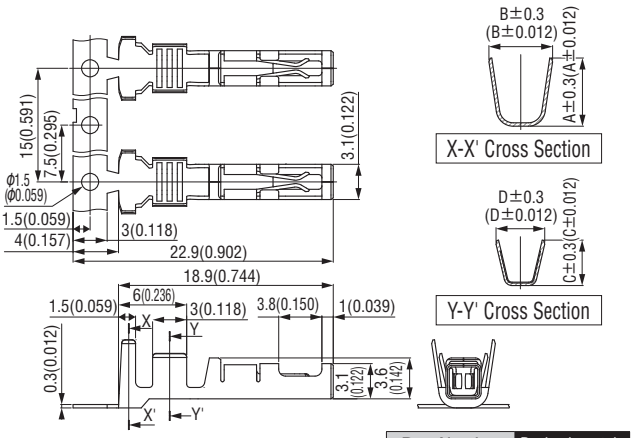

Part Number	Packaging style
#625F-1□-R	Reel
#625F-1□-B	Other

ORDER CODE #625F - 1□ - □

① ② ③ ④

*Please order in multiples of the quantity per package.

① 【Contact Name】 #625 : Crimp contact for FTC

② 【Gold plating thickness】 F: 0.38 μ m min.

③ 【Recommended cable size】

1M: Single crimp AWG #18/20
(Outer diameter of cable coating: Φ 1.8-2.8 mm)
Two-piece crimp AWG#20 × 2 pieces
(Outer diameter of cable coating: Φ 1.8 to 1.9 mm × 2 pieces)
Two-piece crimp AWG #18 x 2 pieces
(Outer diameter of cable coating: Φ 2.0 to 2.1 mm x 2 pieces)

1L: Single crimp AWG #14/16
(Outer diameter of cable coating: Φ 2.4-3.4 mm)
Two-piece crimp AWG #16 × 2 piece
(Outer diameter of cable coating: Φ 3.0 mm × 2 pieces)

④ 【Packaging Form】 R: Reel B: Loose

▶ Product Table

Part Number	A	B	C	D	Number of packaging
#625F-1M-R	5.0(0.197)	4.68(0.184)	3.5(0.138)	3.5(0.138)	2,000
#625F-1M-B	5.0(0.197)	4.68(0.184)	3.5(0.138)	3.5(0.138)	100
#625F-1L-R	6.0(0.236)	5.61(0.221)	4.0(0.157)	4.29(0.169)	2,000
#625F-1L-B	6.0(0.236)	5.61(0.221)	4.0(0.157)	4.29(0.169)	100

◆Crimp contact for FTC01-12 (Cable side connector) [Recommended cable size: 2L]

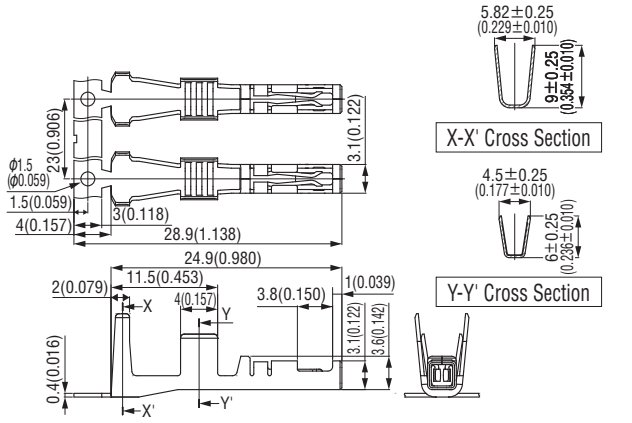

ORDER CODE #625F - 2L - □

① ② ③ ④

*Please order in multiples of the quantity per package.

① 【Contact Name】 #625: Crimp contact for FTC

② 【Gold plating thickness】 F: 0.38 μ m min.

③ 【Recommended cable size】

2L: Two-piece crimp AWG #14 × 2 pieces
(Outer diameter of cable coating: Φ 3.4 mm × 2 pieces)

④ 【Packaging Form】 R: Reel B: Loose

▶ Product Table

Part Number	Number of packaging	Packaging style
#625F-2L-R	800	Reel
#625F-2L-B	100	Other

Twin-Leaf Pinching 2-point contact structure

With the KEL original twin-leaf pinching 2 point contact structure, the flat plate type contact of plug connector is inserted into the contact of receptacle connector (A part of the figure on the right side) for electrical contact.
The flat plate shaped contact of plug connector is tolerant of buckling compared to pin header type contact, and the stable contact force of the pinching structure of receptacle connector assures high reliability of electrical contact.

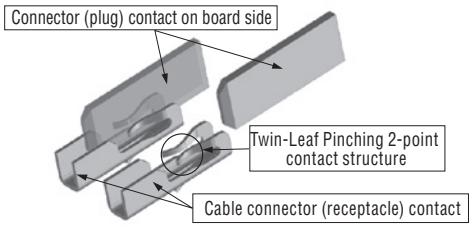

Assembly tool

◆Hand tool

Part Number	Hand color	Recommended contact	Recommended crimp number	Recommended cable
CH-07 (#625-1M_FTC)	Red	#625F-1M-□	One	AWG#18/20
			Two	AWG#20×2
			Two	AWG#18×2
CH-08 (#625-1L_FTC)	Green	#625F-1L-□	One	AWG#14/16
			Two	AWG#16×2
CH-09 (#625-2L_FTC)	Blue	#625F-2L-□	Two	AWG#14×2

◆Crimping machine

Crimping machine	#625F-1M-R	#625F-1L-R	#625F-2L-R
Manufacturer	Nippon Automatic Machine Co., Ltd.		
Crimping machine	LPC220S		LPC420S
Applicators	CFX020200K	CFX020100K	QFX021900K

※A crimping machine and applicator can be for purchased from Nippon Automatic Machine Co., Ltd.

FTC01-12 (Receptacle, Cable side connector)

Unit : mm(inch)

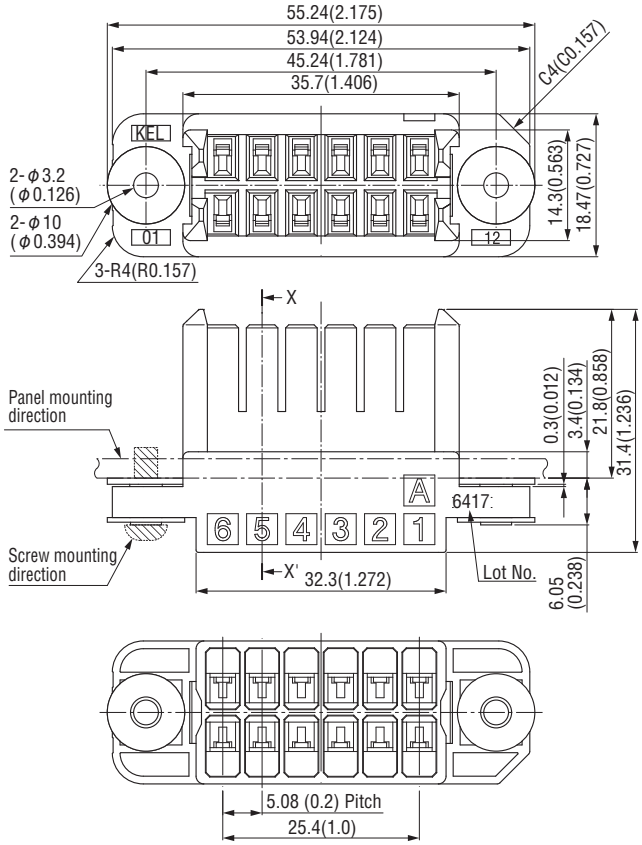

Panel Layout(Component Side View)

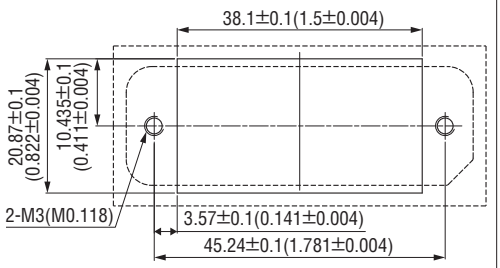

Panel thickness t=2.5(0.098) max.

X-X' Cross Section (Contact is inserted)

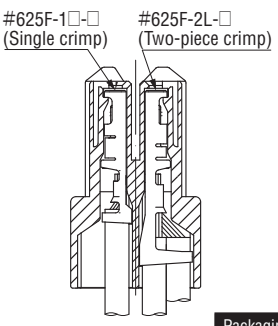

Packaging style
Tray

Product Table

No. of contacts	Part Number	Number of packaging
12	FTC01-12	36

FTC11-12LF (Plug, PCB side connector)

Unit : mm(inch)

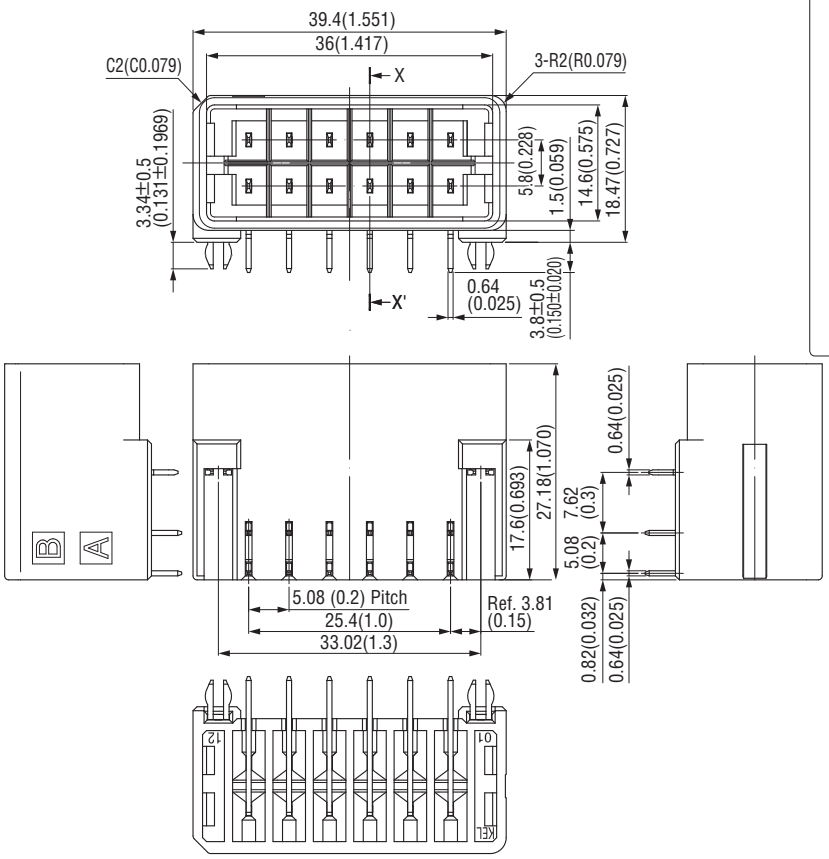

Printed Curicuit Board Layout (Component Side View)

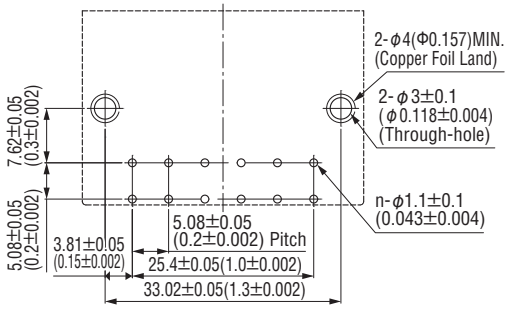

Board thickness t = 1.6(0.063) to 2.4(0.094)
"n" is number of contacts.

X-X' Cross Section

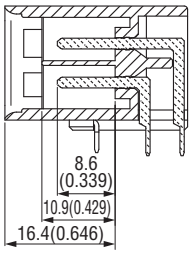

Packaging style
Pipe

Product Table

No. of contacts	Part Number	Number of packaging
12	FTC11-12LF	12

FAS SERIES

1.5mm PITCH DRAWER CONNECTOR

RoHS Compliant

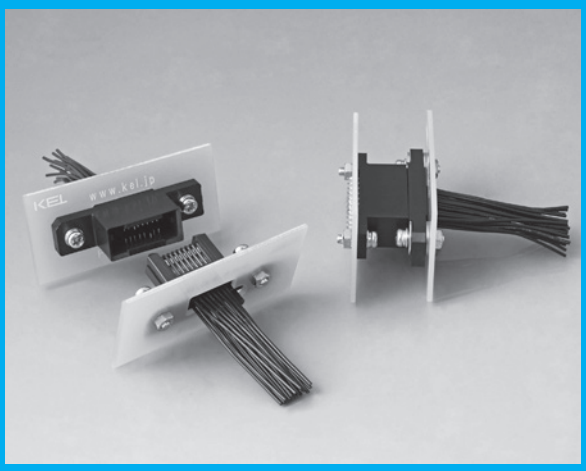

FEATURES

- Receptacle (FAS01:Cable side connector),Plug(FAS11:PCB side connector) and Cable plug(FAS12:Cable side connector for cable to cable) are available and can accommodate a wide range of usage.
- Downsized by more than 30% compared to FA Series.
- Absorbs ±3mm gap in X and Y directions when mating.
- Floating structure of the screwed area enables ±1.4mm displacement in X and Y directions in mated condition.
- Highly reliable design with effective mating length of 3.4mm(0.134").
- Twin leaf pinching 2 points structure ensures reliability with stable contact force and prevents contact buckling.
- Option applicable to hot swap.
- 3 levels of hot swap can be applied for FAS12 series.

ORDER CODE

FAS01-□□□

① ②

*Please order in multiples of the quantity per package.

① 【Type】 FAS01 : Receptacle (Cable side connector)

② 【Number of contacts】 004 : 4pin 006 : 6pin 008 : 8pin 010 : 10pin 012 : 12pin 014 : 14pin 016 : 16pin 018 : 18pin 020 : 20pin 022 : 22pin 024 : 24pin 026 : 26pin 028 : 28pin 030 : 30pin 032 : 32pin 034 : 34pin 036 : 36pin 038 : 38pin 040 : 40pin

*Above order code FAS01-□□□ is for the housing only, contact terminals are sold separately. About contact order code, Please refer next page.

ORDER CODE

FAS11-□□□

① ②

*Please order in multiples of the quantity per package.

① 【Type】 FAS01 : Plug (PCB side connector)

② 【Number of contacts】 004 : 4 pin 016 : 16 pin 026 : 26 pin 028 : 28 pin 036 : 36 pin 038 : 38 pin 040 : 40 pin

ORDER CODE

FAS12-□□□

① ②

*Please order in multiples of the quantity per package.

① 【Type】 FAS12 : Plug (Cable plug)

② 【Number of contacts】 004 : 4pin 006 : 6pin 008 : 8pin 010 : 10pin 012 : 12pin 014 : 14pin 016 : 16pin 018 : 18pin 020 : 20pin 022 : 22pin 024 : 24pin 026 : 26pin 028 : 28pin 030 : 30pin 032 : 32pin 034 : 34pin 036 : 36pin 038 : 38pin 040 : 40pin

*Above order code FAS12-□□□ is for the housing only, contact terminals are sold separately. About contact order code, Please refer next page.

SPECIFICATIONS

Material and plating		Electrical Characteristics	
Insulator material	Glass-filled PBT(UL94V-0), Black	Current rating	[FAS01/FAS11] AWG#24:3.0A MAX. per contact AWG#26:2.5A MAX. per contact (3A is applicable for 20 pin and under.) AWG#28:2.5A MAX. per contact (3A is applicable for 10 pin and under.) [FAS01/FAS12] AWG#24:2.5A MAX. per contact (3A is applicable for 20 pin and under.) AWG#26:2.0A MAX. per contact (3A is applicable for 10 pin and under.) AWG#28:1.5A MAX. per contact (3A is applicable for 8 pin and under.)
Contact material	[FAS01/12]Copper alloy [FAS11]Brass		
Contact plating	[FAS01/12] (Contact area) Gold over Nickel (Crimping area) Tin over Nickel [FAS11] Gold over Nickel	Contact resistance	30mΩ max.
		Dielectric withstanding voltage	650V AC for 1 minute
		Insulation resistance	1000MΩ min. at 500V DC
		Operating temperature	-40°C to +85°C
Washer / Rivet material	Stainless steel	Durability of insertion and withdrawal	2,000 times
		Recommended cable	#24/26/28 AWG Discrete wire cables (outer diameter of cable coating : Φ0.88 toΦ1.11mm)

*High mating cycle endurance types (FAS01/12 : 7,000 times min. / FAS01/11 : 5,000 times min.) are also available. (Please contact your local KEL sales office.)

Contact Terminal

Unit : mm(inch)

◆Contact terminal for FAS01-□□□ receptacle (Cable side connector)

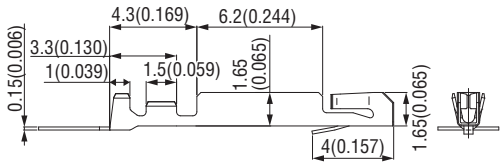

ORDER CODE #597 □ - □

① ② ③

*Please order in multiples of the quantity per package.

① 【Contact】 #597 : Crimping type contact for FAS01

② 【Gold plating thickness】 Omit : 0.05μm min. D : 0.25μm min.

③ 【Recommended cable】 Omit : #26 AWG and #28 AWG
(Outer diameter of cable coating: φ 0.88 to φ 1.00mm)
1 : #24 AWG (Outer diameter of cable coating: φ 1.08 to φ 1.11mm)

Product Table

Packaging style
Tape&Reel

Part Number	Number of packaging
#597□-□	10,000

◆Contact terminal for FAS12-□□□ plug (Cable plug)

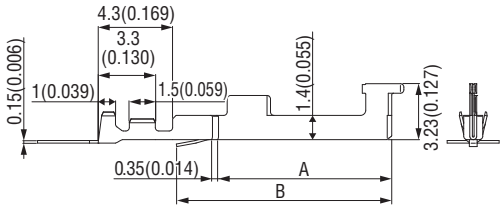

ORDER CODE #615 - □

① ②

*Please order in multiples of the quantity per package.

① 【Contact】 #615 : Crimping type contact for FAS12

② 【Recommended cable】
Standard terminal
Omit : #26 AWG and #28AWG (Cable diameter: φ 0.88mm to φ 1.00mm)
1 : #24 AWG (Cable diameter: φ 1.08mm to φ 1.11mm)
Long terminal
2 : #26 AWG and #28AWG (Cable diameter: φ 0.88mm to φ 1.00mm)
3 : #24 AWG (Cable diameter: φ 1.08mm to φ 1.11mm)
Short terminal
4 : #26 AWG and #28AWG (Cable diameter: φ 0.88mm to φ 1.00mm)
5 : #24 AWG (Cable diameter: φ 1.08mm to φ 1.11mm)

Product Table

Packaging style
Tape&Reel

Part Number	A	B	Number of packaging
#615,#615-1	10.0 (0.394)	12.41 (0.489)	5,000
#615-2,3	11.0 (0.433)	13.41 (0.528)	5,000
#615-4,5	9.0 (0.354)	11.41 (0.449)	5,000

Assembly Tool

Hand Tool

Part Number	CH-05		CH-10	CH-11
Series Name	FAS01		FAS12	
Mating Cable	#26 AWG, #28 AWG	#24 AWG	#26 AWG, #28 AWG	#24 AWG
Mating Contact	#597□	#597□-1	#615,#615-2,4	#615-1,3,5

Crimping Machine

Mating Contact	#597□	#597□-1	#615,#615-2,4	#615-1,3,5
Manufacturer	JAPAN AUTOMATIC MACHINE CO., LTD			
Crimping Machine	LPC220S			
Applicator	EFS857400	EFS866100	EFS876700K	EFS876600K

A crimping machine and applicator can be purchased from Japan Automatic Machine Co., Ltd.

Twin-Leaf Pinching 2 Point Contact Structure

With the KEL original twin-leaf pinching 2 point contact structure, the flat plate type contact of plug connector is inserted into the contact of receptacle connector (A part of the figure shown on the right) for electrical contact.

The flat plate shaped contact of plug connector is tolerant of buckling compared to pin header type contact, and the stable contact force of the pinching structure of receptacle connector assures high reliability of electrical contact.

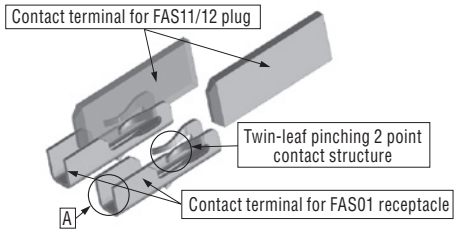

FAS01-□□□ (Receptacle, Cable side connector, Housing)

Unit : mm(inch)

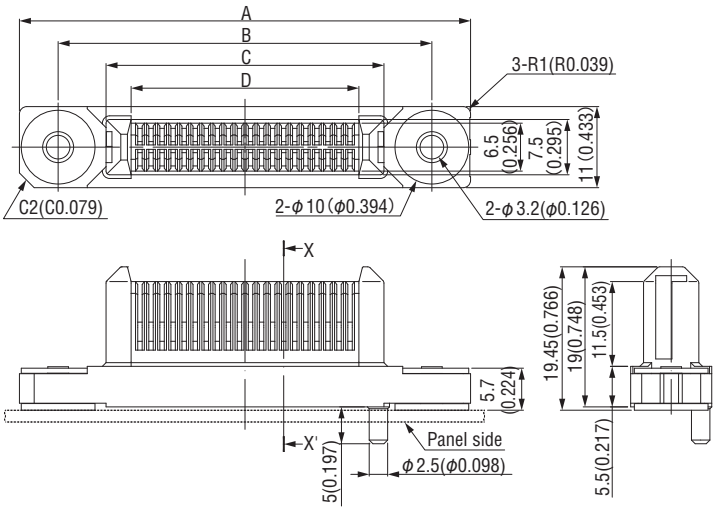

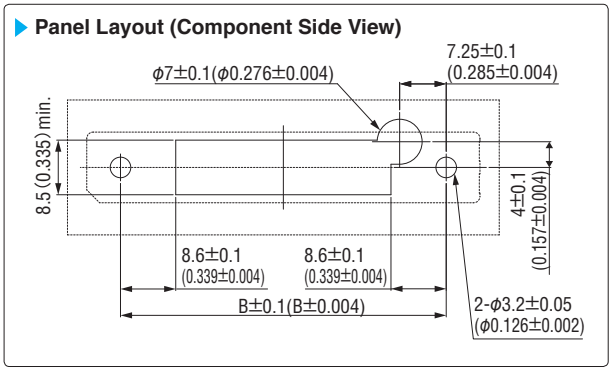

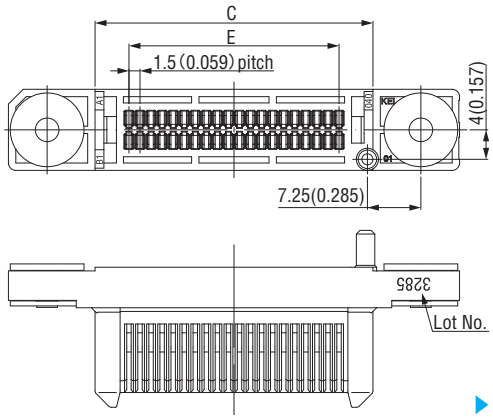

X-X' Cross Section (Contact Inserted)

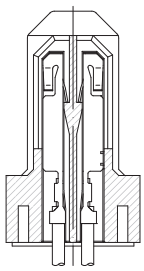

Packaging style
Tray

Product Table / Dimensions

No. of contacts	Part Number	A	B	C	D	E	Number of packaging
4	FAS01-004	34.2 (1.346)	23.7 (0.933)	10.7 (0.421)	3.9 (0.154)	1.5 (0.059)	130
6	FAS01-006	35.7 (1.406)	25.2 (0.992)	12.2 (0.480)	5.4 (0.213)	3.0 (0.118)	130
8	FAS01-008	37.2 (1.465)	26.7 (1.051)	13.7 (0.539)	6.9 (0.272)	4.5 (0.177)	117
10	FAS01-010	38.7 (1.524)	28.2 (1.110)	15.2 (0.598)	8.4 (0.331)	6.0 (0.236)	117
12	FAS01-012	40.2 (1.583)	29.7 (1.169)	16.7 (0.657)	9.9 (0.390)	7.5 (0.295)	104
14	FAS01-014	41.7 (1.642)	31.2 (1.228)	18.2 (0.717)	11.4 (0.449)	9.0 (0.354)	104
16	FAS01-016	43.2 (1.701)	32.7 (1.287)	19.7 (0.776)	12.9 (0.508)	10.5 (0.413)	104
18	FAS01-018	44.7 (1.760)	34.2 (1.346)	21.2 (0.835)	14.4 (0.567)	12.0 (0.472)	104
20	FAS01-020	46.2 (1.819)	35.7 (1.406)	22.7 (0.894)	15.9 (0.626)	13.5 (0.531)	91
22	FAS01-022	47.7 (1.878)	37.2 (1.465)	24.2 (0.953)	17.4 (0.685)	15.0 (0.591)	91
24	FAS01-024	49.2 (1.937)	38.7 (1.524)	25.7 (1.012)	18.9 (0.744)	16.5 (0.650)	91
26	FAS01-026	50.7 (1.996)	40.2 (1.583)	27.2 (1.071)	20.4 (0.823)	18.0 (0.709)	91
28	FAS01-028	52.2 (2.055)	41.7 (1.642)	28.7 (1.130)	21.9 (0.862)	19.5 (0.768)	78
30	FAS01-030	53.7 (2.114)	43.2 (1.701)	30.2 (1.189)	23.4 (0.921)	21.0 (0.827)	78
32	FAS01-032	55.2 (2.173)	44.7 (1.760)	31.7 (1.248)	24.9 (0.980)	22.5 (0.886)	78
34	FAS01-034	56.7 (2.232)	46.2 (1.819)	33.2 (1.307)	26.4 (1.039)	24.0 (0.945)	78
36	FAS01-036	58.2 (2.291)	47.7 (1.878)	34.7 (1.366)	27.9 (1.098)	25.5 (1.004)	78
38	FAS01-038	59.7 (2.350)	49.2 (1.937)	36.2 (1.425)	29.4 (1.157)	27.0 (1.063)	78
40	FAS01-040	61.2 (2.409)	50.7 (1.996)	37.7 (1.484)	30.9 (1.217)	28.5 (1.122)	65

FAS11-□□□ (Plug, PCB side connector)

Unit : mm(inch)

Printed Circuit Board Layout (Component Side View)

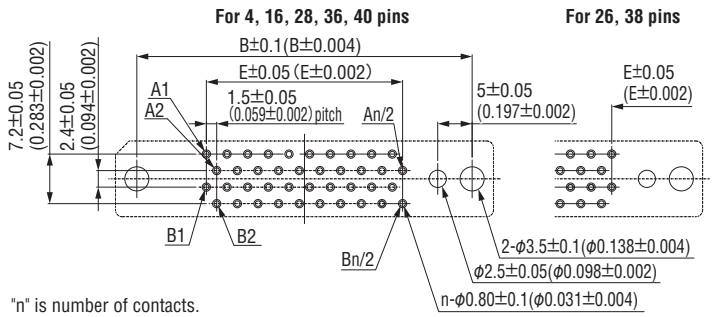

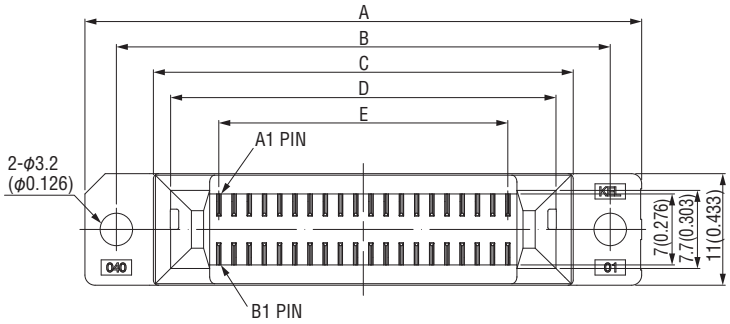

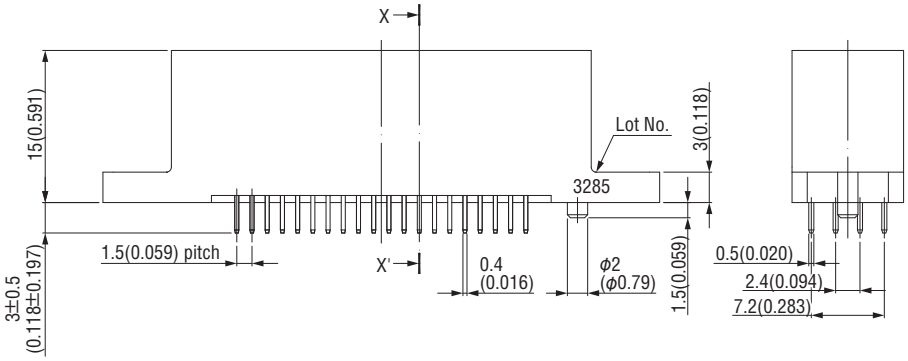

X-X′Cross Section

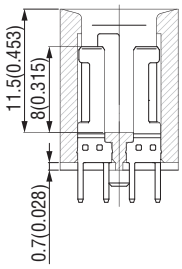

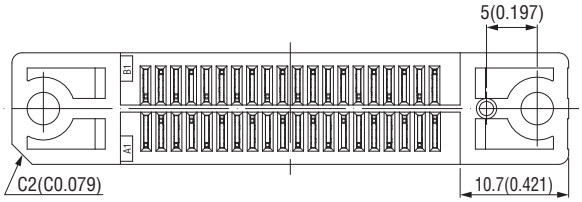

Packaging style
Pipe

Product Table / Dimensions

No. of contacts	Part Number	A	B	C	D	E	Number of packaging
4	FAS11-004	27.9 (1.098)	21.7 (0.854)	14.4 (0.567)	11.0 (0.433)	1.5 (0.059)	18
16	FAS11-016	36.9 (1.453)	30.7 (1.209)	23.4 (0.921)	20.0 (0.787)	10.5 (0.413)	13
26	FAS11-026	44.4 (1.748)	38.2 (1.504)	30.9 (1.217)	27.5 (1.083)	18.0 (0.709)	11
28	FAS11-028	45.9 (1.807)	39.7 (1.563)	32.4 (1.276)	29.0 (1.142)	19.5 (0.768)	11
36	FAS11-036	51.9 (2.043)	45.7 (1.799)	38.4 (1.512)	35.0 (1.378)	25.5 (1.004)	9
38	FAS11-038	53.4 (2.102)	47.2 (1.858)	39.9 (1.571)	36.5 (1.437)	27.0 (1.063)	9
40	FAS11-040	54.9 (2.161)	48.7 (1.917)	41.4 (1.630)	38.0 (1.496)	28.5 (1.122)	9

FAS12-□□□ (Cable plug, Housing)

Unit : mm(inch)

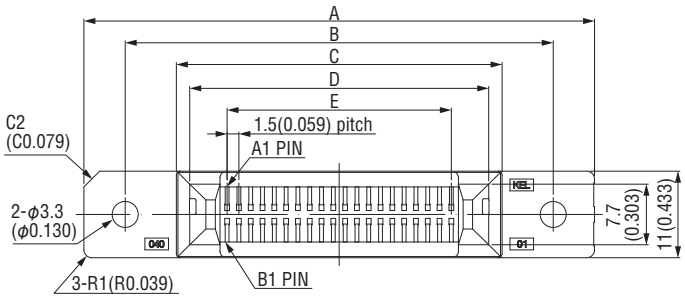

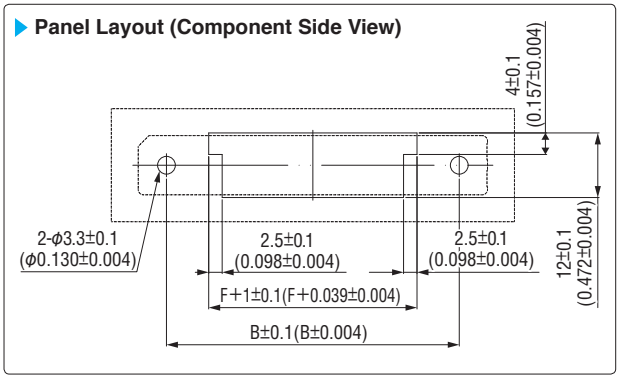

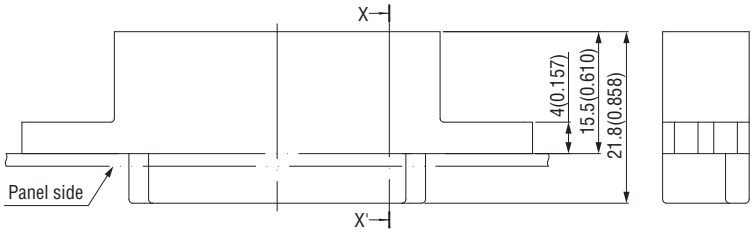

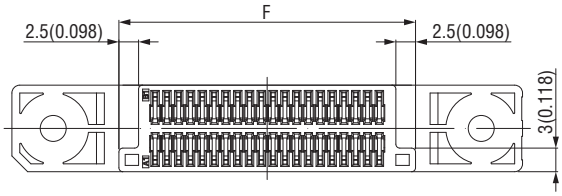

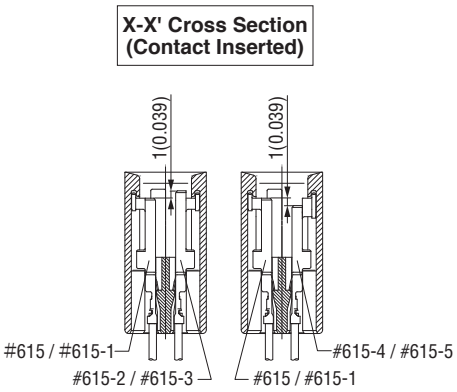

Packaging style
Tray

Product Table / Dimensions

No. of contacts	Part Number	A	B	C	D	E	F	Number of packaging
4	FAS12-004	37.9 (1.492)	27.4 (1.079)	14.4 (0.567)	11.0 (0.433)	1.5 (0.059)	10.7 (0.421)	117
6	FAS12-006	39.4 (1.551)	28.9 (1.138)	15.9 (0.626)	12.5 (0.492)	3.0 (0.118)	12.2 (0.480)	117
8	FAS12-008	40.9 (1.610)	30.4 (1.197)	17.4 (0.685)	14.0 (0.551)	4.5 (0.177)	13.7 (0.539)	104
10	FAS12-010	42.4 (1.669)	31.9 (1.256)	18.9 (0.744)	15.5 (0.610)	6.0 (0.236)	15.2 (0.598)	104
12	FAS12-012	43.9 (1.728)	33.4 (1.315)	20.4 (0.823)	17.0 (0.669)	7.5 (0.295)	16.7 (0.657)	104
14	FAS12-014	45.4 (1.787)	34.9 (1.374)	21.9 (0.862)	18.5 (0.728)	9.0 (0.354)	18.2 (0.717)	91
16	FAS12-016	46.9 (1.846)	36.4 (1.433)	23.4 (0.921)	20.0 (0.787)	10.5 (0.413)	19.7 (0.776)	91
18	FAS12-018	48.4 (1.906)	37.9 (1.492)	24.9 (0.980)	21.5 (0.846)	12.0 (0.472)	21.2 (0.835)	91
20	FAS12-020	49.9 (1.965)	39.4 (1.551)	26.4 (1.039)	23.0 (0.906)	13.5 (0.531)	22.7 (0.894)	91
22	FAS12-022	51.4 (2.024)	40.9 (1.610)	27.9 (1.098)	24.5 (0.965)	15.0 (0.591)	24.2 (0.953)	78
24	FAS12-024	52.9 (2.083)	42.4 (1.669)	29.4 (1.157)	26.0 (1.024)	16.5 (0.650)	25.7 (1.012)	78
26	FAS12-026	54.4 (2.142)	43.9 (1.728)	30.9 (1.217)	27.5 (1.083)	18.0 (0.709)	27.2 (1.071)	78
28	FAS12-028	55.9 (2.201)	45.4 (1.787)	32.4 (1.276)	29.0 (1.142)	19.5 (0.768)	28.7 (1.130)	78
30	FAS12-030	57.4 (2.260)	46.9 (1.846)	33.9 (1.335)	30.5 (1.201)	21.0 (0.827)	30.2 (1.189)	78
32	FAS12-032	58.9 (2.319)	48.4 (1.906)	35.4 (1.394)	32.0 (1.260)	22.5 (0.886)	31.7 (1.248)	78
34	FAS12-034	60.4 (2.378)	49.9 (1.965)	36.9 (1.453)	33.5 (1.319)	24.0 (0.945)	33.2 (1.307)	65
36	FAS12-036	61.9 (2.437)	51.4 (2.024)	38.4 (1.512)	35.0 (1.378)	25.5 (1.004)	34.7 (1.366)	65
38	FAS12-038	63.4 (2.496)	52.9 (2.083)	39.9 (1.571)	36.5 (1.437)	27.0 (1.063)	36.2 (1.425)	65
40	FAS12-040	64.9 (2.555)	54.4 (2.142)	41.4 (1.630)	38.0 (1.496)	28.5 (1.122)	37.7 (1.484)	65

FA SERIES

2.5mm PITCH DRAWER CONNECTOR

RoHS Compliant

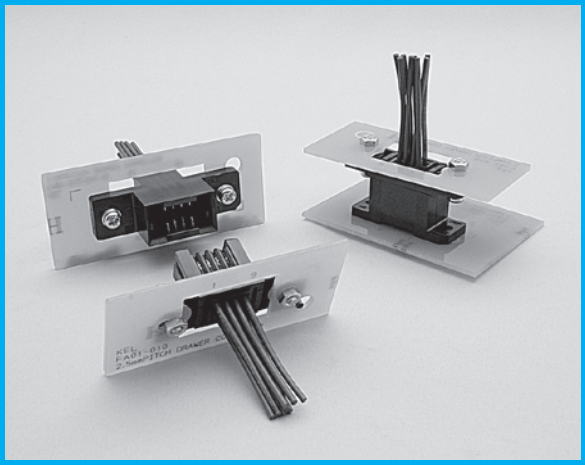

FEATURES

- Receptacle (FA:Cable side connector),Plug(FA11:PCB side connector) and Cable plug(FA12:Cable side connector for cable to cable) are available and can accommodate a wide range of usage.
- Absorbs ±3mm(0.118") gap in X and Y directions when mating.
- Floating structure of the screwed area enables ±1.4mm(0.055) displacement in X and Y directions in mated condition.
- Highly reliable design with effective mating length of 3mm(0.118").
- With a twin-leaf pinching 2 point contact structure adopted as a contact mechanism, improved reliability based on stable contact performance is ensured.
- Option applicable for Hot swap is available for FA12 sereis.

ORDER CODE

FA01-□□□-□

① ② ③

*Please order in multiples of the quantity per package.

① 【Type】 FA01 : Receptacle (Cable side connector)

② 【Number of contacts】 004 : 4pin 006 : 6pin 008 : 8pin 010 : 10pin 012 : 12pin 014 : 14pin 016 : 16pin 018 : 18pin 020 : 20pin 022 : 22pin 024 : 24pin 026 : 26pin 028 : 28pin 030 : 30pin 032 : 32pin 034 : 34pin 038 : 38pin 040 : 40pin

③ 【Positioning post】 Omit : With post 1 : Without post*

*Above order code FA01-□□□-□ is for the housing only, contact terminals are sold separately. About contact order code, please refer next page.
*Pin counts for without positoning post type will be added to the line up accordingly. Please contact your local KEL sales office for consideration and purchasing.

ORDER CODE

FA11-□□□

① ②

*Please order in multiples of the quantity per package.

① 【Type】 FA11 : Plug (PCB side connector)

② 【Number of contacts】 004 : 4pin 006 : 6pin 008 : 8pin 010 : 10pin 012 : 12pin 014 : 14pin 016 : 16pin 018 : 18pin 020 : 20pin 022 : 22pin 024 : 24pin 026 : 26pin 028 : 28pin 030 : 30pin 032 : 32pin 034 : 34pin 040 : 40pin

ORDER CODE

FA12-□□□

① ②

*Please order in multiples of the quantity per package.

① 【Type】 FA12 : Plug (Cable plug)

② 【Number of contacts】 006 : 6pin 008 : 8pin 012 : 12pin 016 : 16pin 020 : 20pin 024 : 24pin 034 : 34pin 038 : 38pin 040 : 40pin

*Above order code FA12-□□□ is for the housing only, contact terminals are sold separately. About contact order code, please refer next page.

SPECIFICATIONS

Material and plating	
Insulator material	Glass-filled PBT (UL94V-0), Black
Contact material	Copper alloy
Contact plating	(Contact /Terminal area) Gold over Nickel (Crimping area) Tin over Nickel
Washer / Rivet material	Stainless steel

Electrical Characteristics	
Current rating	3A per contact
Contact resistance	30mΩ max.
Dielectric withstanding voltage	650V AC for 1 minute.
Insulation resistance	1000MΩ min. at 500V DC
Operating temperature	-40°C to +85°C
Durability of insertion and withdrawal	500 times
Recommended cable	#22/24/26/28 AWG Discrete wire cable (outer diameter of cable coating : Φ0.88 toΦ1.70mm)

*High mating cycle endurance type (5,000 times min.) is also available, please contact your local KEL sales office.

B.C.E. S.r.l. Via Regina Pacis, 54/c - I 41049 Sassuolo (MO) Tel.: (+39) 0536 811616 - Fax.: (+39) 0536 811500 e-mail: bce@bce.it - Website: www.bce.it

Contact Terminal

Unit : mm(inch)

◆Contact terminal for FA01□□□-□ receptacle (Cable side connector)

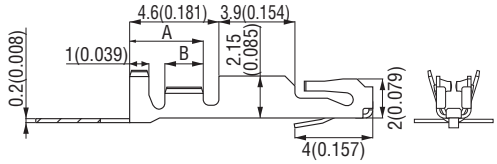

Packaging style
Tape&Reel

ORDER CODE #566 □ - □

① ② ③

*Please order in multiples of the quantity per package.

① 【Contact name】 #566 : Crimping type contact for FA01

② 【Plating of contact area】 Omit : 0.05 μ m min. D : 0.25 μ m min.

③ 【Recommended cable】 Omit : #22 AWG, #24 AWG and #26 AWG(Cable diameter : φ 1.00mm to φ 1.70mm)
1 : #26 AWG and #28 AWG(Cable diameter : φ 0.88mm to φ 1.20mm)

▶ Product Table / Dimensions

Part Number	A	B	Number of packaging
#566□	3.80 (0.150)	2.0 (0.079)	10,000
#566□-1	3.55 (0.140)	1.5 (0.059)	10,000

◆Contact terminal for FA12-□□□ plug (Cable plug)

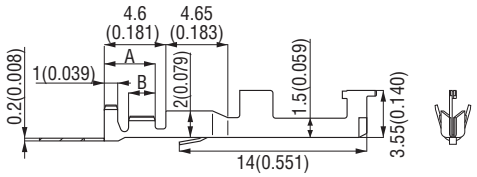

Packaging style
Tape&Reel

ORDER CODE #570 - □

① ②

*Please order in multiples of the quantity per package.

① 【Contact name】 #570 : Crimping type contact for FA12

② 【Recommended cable】 Omit : #22 AWG, #24 AWG and #26 AWG(Cable diameter : φ 1.00mm to φ 1.70mm)
1 : #26 AWG and #28 AWG(Cable diameter : φ 0.88mm to φ 1.20mm)

▶ Product Table / Dimensions

Part Number	A	B	Number of packaging
#570	3.80 (0.150)	2.0 (0.079)	7,500
#570-1	3.55 (0.140)	1.5 (0.059)	7,500

Twin-Leaf Pinching 2 Point Contact Structure

With the KEL original twin-leaf pinching 2 point contact structure, the flat plate type contact of plug connector is inserted into the contact of receptacle connector (A part of the figure on the right side) for electrical contact.

The flat plate shaped contact of plug connector is tolerant of buckling compared to pin header type contact, and the stable contact force of the pinching structure of receptacle connector assures high reliability of electrical contact.

The twin-leaf pinching 2 point contact structure is a contact method well acknowledged for our GF series battery connector which has high sales and is highly evaluated in lap top computer market.

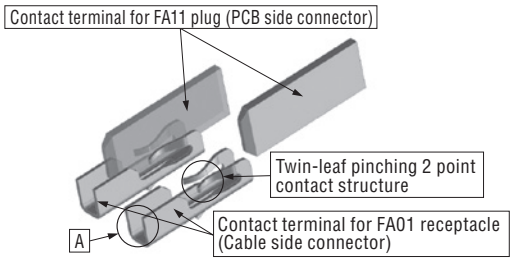

Assembly Tool

▶ Hand Tool

Part Number	CH-01	CH-02	CH-04
Mating Cable	#22 AWG, #24 AWG	#26 AWG, #28 AWG	#22 AWG, #24 AWG
Mating Contact	#566□	#566□-1, #570-1	#570

Please consult with your local KEL sales office if you intend to use an #26 AWG cable at #566 or #570 contact and crimp them using a hand tool.

▶ Crimping Machine

Mating Contact	#566□	#566□-1	#570	#570-1
Manufacturer	JAPAN AUTOMATIC MACHINE CO., LTD			
Crimping Machine	LPC220S			
Applicator	CFS779100	CFS815200	CFS791600	CFS813100

A crimping machine and applicator are available for purchase from Japan Automatic Machine Co., Ltd.

B.C.E. S.r.l. Via Regina Pacis, 54/c - I 41049 Sassuolo (MO) Tel.: (+39) 0536 811616 - Fax.: (+39) 0536 811500 e-mail: bce@bce.it - Website: www.bce.it

FA01-□□□-□ (Receptacle, Cable side connector, Housing)

Unit : mm(inch)

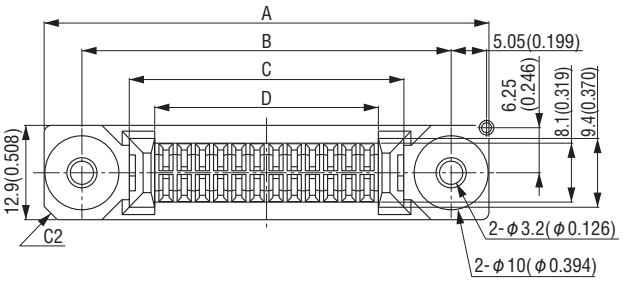

Panel Layout (Component Side View)

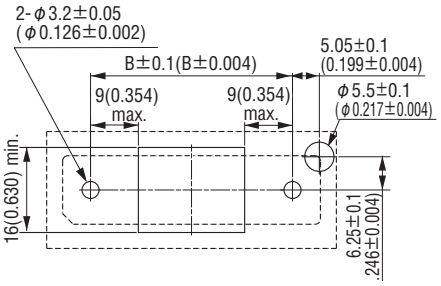

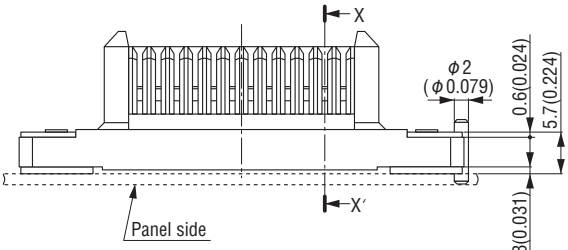

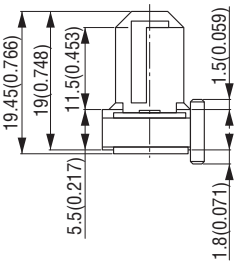

X-X′Cross Section (Contact Inserted)

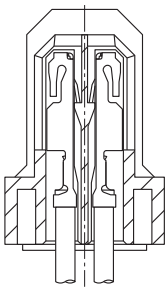

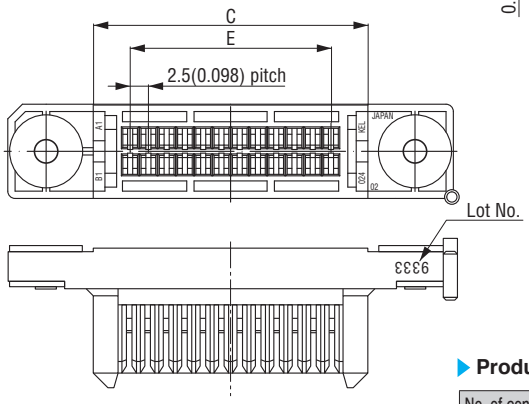

Packaging style
Pipe

Product Table / Dimensions

No. of contacts	Part Number	A	B	C	D	E	Number of packaging
4	FA01-004-□	36.0 (1.417)	25.5 (1.004)	12.5 (0.492)	5.7 (0.224)	2.5 (0.098)	108
6	FA01-006-□	38.5 (1.516)	28.0 (1.102)	15.0 (0.591)	8.2 (0.323)	5.0 (0.197)	108
8	FA01-008-□	41.0 (1.614)	30.5 (1.201)	17.5 (0.689)	10.7 (0.421)	7.5 (0.295)	96
10	FA01-010-□	43.5 (1.713)	33.0 (1.299)	20.0 (0.787)	13.2 (0.520)	10.0 (0.394)	96
12	FA01-012-□	46.0 (1.811)	35.5 (1.398)	22.5 (0.886)	15.7 (0.618)	12.5 (0.492)	84
14	FA01-014-□	48.5 (1.909)	38.0 (1.496)	25.0 (0.984)	18.2 (0.717)	15.0 (0.591)	84
16	FA01-016-□	51.0 (2.008)	40.5 (1.594)	27.5 (1.083)	20.7 (0.815)	17.5 (0.689)	72
18	FA01-018-□	53.5 (2.106)	43.0 (1.693)	30.0 (1.181)	23.2 (0.913)	20.0 (0.787)	72
20	FA01-020-□	56.0 (2.205)	45.5 (1.791)	32.5 (1.280)	25.7 (1.012)	22.5 (0.886)	72
22	FA01-022-□	58.5 (2.303)	48.0 (1.890)	35.0 (1.378)	28.2 (1.110)	25.0 (0.984)	72
24	FA01-024-□	61.0 (2.402)	50.5 (1.988)	37.5 (1.476)	30.7 (1.209)	27.5 (1.083)	60
26	FA01-026-□	63.5 (2.500)	53.0 (2.087)	40.0 (1.575)	33.2 (1.307)	30.0 (1.181)	60
28	FA01-028-□	66.0 (2.598)	55.5 (2.185)	42.5 (1.673)	35.7 (1.406)	32.5 (1.280)	60
30	FA01-030-□	68.5 (2.697)	58.0 (2.283)	45.0 (1.772)	38.2 (1.504)	35.0 (1.378)	60
32	FA01-032-□	71.0 (2.795)	60.5 (2.382)	47.5 (1.870)	40.7 (1.602)	37.5 (1.476)	60
34	FA01-034-□	73.5 (2.894)	63.0 (2.480)	50.0 (1.969)	43.2 (1.701)	40.0 (1.575)	48
38	FA01-038-□	78.5 (3.091)	68.0 (2.677)	55.0 (2.165)	48.2 (1.898)	45.0 (1.772)	48
40	FA01-040-□	81.0 (3.189)	70.5 (2.776)	57.5 (2.264)	50.7 (1.996)	47.5 (1.870)	48

FA11-□□□ (Plug, PCB side connector)

Unit : mm(inch)

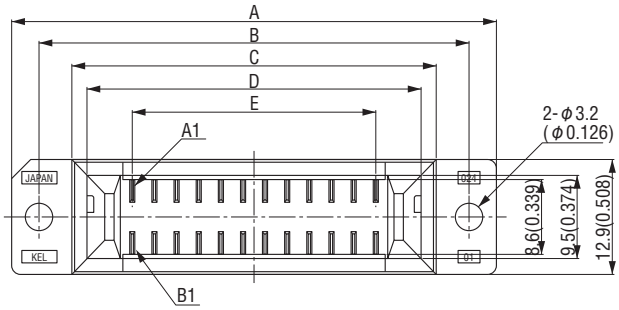

Printed Circuit Board Layout (Component Side View)

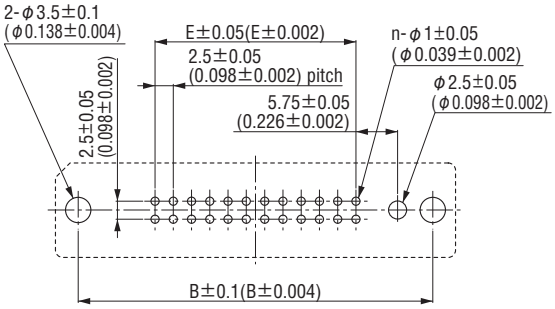

"n" is number of contacts.

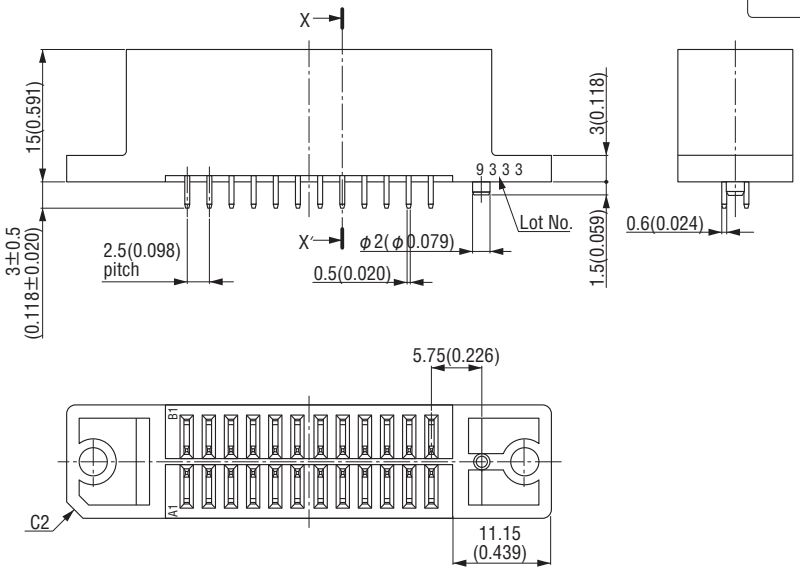

X-X′Cross Section

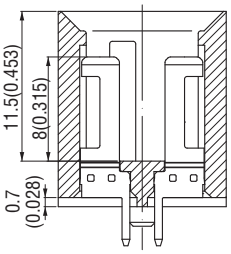

Packaging style
Pipe

Product Table / Dimensions

No. of contacts	Part Number	A	B	C	D	E	Number of packaging
4	FA11-004	29.8 (1.173)	23.6 (0.929)	16.2 (0.638)	12.8 (0.504)	2.5 (0.098)	17
6	FA11-006	32.3 (1.272)	26.1 (1.028)	18.7 (0.736)	15.3 (0.602)	5.0 (0.197)	15
8	FA11-008	34.8 (1.370)	28.6 (1.126)	21.2 (0.835)	17.8 (0.701)	7.5 (0.295)	14
10	FA11-010	37.3 (1.469)	31.1 (1.224)	23.7 (0.933)	20.3 (0.799)	10.0 (0.394)	13
12	FA11-012	39.8 (1.567)	33.6 (1.323)	26.2 (1.031)	22.8 (0.898)	12.5 (0.492)	12
14	FA11-014	42.3 (1.665)	36.1 (1.421)	28.7 (1.130)	25.3 (0.996)	15.0 (0.591)	12
16	FA11-016	44.8 (1.764)	38.6 (1.520)	31.2 (1.228)	27.8 (1.094)	17.5 (0.689)	11
18	FA11-018	47.3 (1.862)	41.1 (1.618)	33.7 (1.327)	30.3 (1.193)	20.0 (0.787)	10
20	FA11-020	49.8 (1.961)	43.6 (1.717)	36.2 (1.425)	32.8 (1.291)	22.5 (0.886)	10
22	FA11-022	52.3 (2.059)	46.1 (1.815)	38.7 (1.524)	35.3 (1.390)	25.0 (0.984)	9
24	FA11-024	54.8 (2.157)	48.6 (1.913)	41.2 (1.622)	37.8 (1.488)	27.5 (1.083)	9
26	FA11-026	57.3 (2.256)	51.1 (2.012)	43.7 (1.720)	40.3 (1.587)	30.0 (1.181)	8
28	FA11-028	59.8 (2.354)	53.6 (2.110)	46.2 (1.819)	42.8 (1.685)	32.5 (1.280)	8
30	FA11-030	62.3 (2.453)	56.1 (2.209)	48.7 (1.917)	45.3 (1.783)	35.0 (1.378)	8
32	FA11-032	64.8 (2.551)	58.6 (2.307)	51.2 (2.016)	47.8 (1.882)	37.5 (1.476)	7
34	FA11-034	67.3 (2.650)	61.1 (2.406)	53.7 (2.114)	50.3 (1.980)	40.0 (1.575)	7
40	FA11-040	74.8 (2.945)	68.6 (2.701)	61.2 (2.409)	57.8 (2.276)	47.5 (1.870)	6

FA12-□□□ (Cable plug, Housing)

Unit : mm(inch)

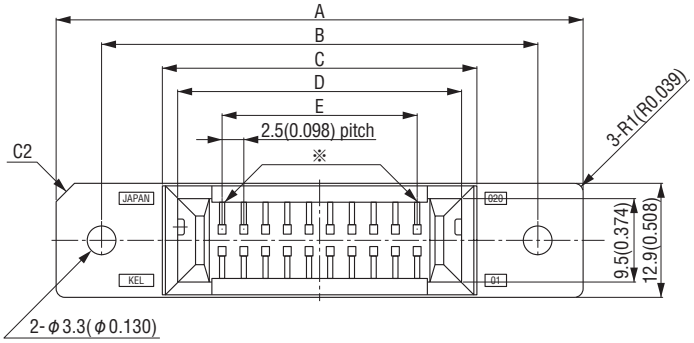

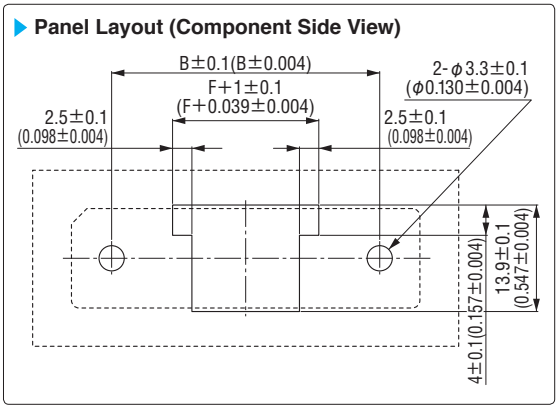

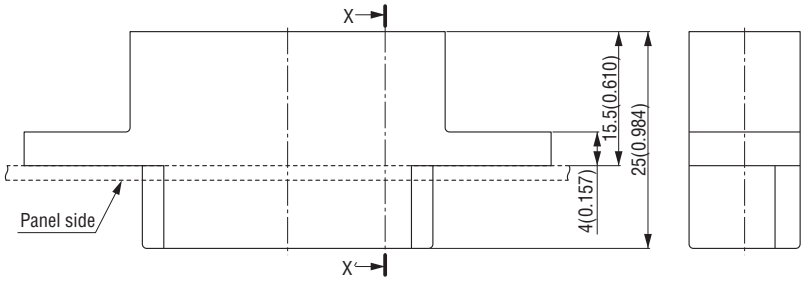

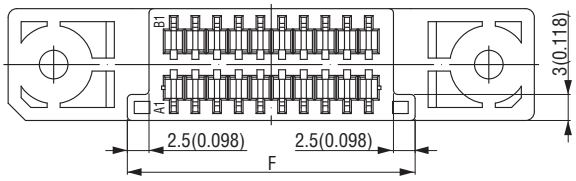

X-X′Cross Section (Contact Inserted)

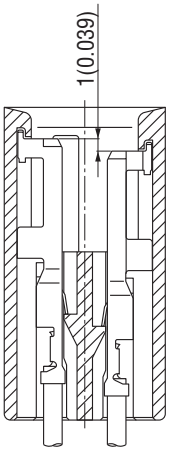

*Hot-swap positions A1 and An/2 are two places.

Packaging style
Tray

Product Table / Dimensions

No. of contacts	Part Number	A	B	C	D	E	F	Number of packaging
6	FA12-006	43.2 (1.701)	32.7 (1.287)	18.7 (0.736)	15.3 (0.602)	5.0 (0.197)	15.7 (0.618)	84
8	FA12-008	45.7 (1.799)	35.2 (1.386)	21.2 (0.835)	17.8 (0.701)	7.5 (0.295)	18.2 (0.717)	84
12	FA12-012	50.7 (1.996)	40.2 (1.583)	26.2 (1.031)	22.8 (0.898)	12.5 (0.492)	23.2 (0.913)	72
16	FA12-016	55.7 (2.193)	45.2 (1.780)	31.2 (1.228)	27.8 (1.094)	17.5 (0.689)	28.2 (1.110)	72
20	FA12-020	60.7 (2.390)	50.2 (1.976)	36.2 (1.425)	32.8 (1.291)	22.5 (0.886)	33.2 (1.307)	60
24	FA12-024	65.7 (2.587)	55.2 (2.173)	41.2 (1.622)	37.8 (1.488)	27.5 (1.083)	38.2 (1.504)	60
34	FA12-034	78.2 (3.079)	67.7 (2.665)	53.7 (2.114)	50.3 (1.980)	40.0 (1.575)	50.7 (1.996)	48
38	FA12-038	83.2 (3.276)	72.7 (2.862)	58.7 (2.311)	55.3 (2.177)	45.0 (1.772)	55.7 (2.193)	48
40	FA12-040	85.7 (3.374)	75.2 (2.961)	61.2 (2.409)	57.8 (2.276)	47.5 (1.870)	58.2 (2.291)	48

B.C.E. S.r.l. Via Regina Pacis, 54/c - I 41049 Sassuolo (MO) Tel.: (+39) 0536 811616 - Fax.: (+39) 0536 811500 e-mail: bce@bce.it - Website: www.bce.it

FBC SERIES

2mm PITCH CONNECTOR FOR DISCRETE CABLE/ CRIMP TYPE

RoHS Compliant

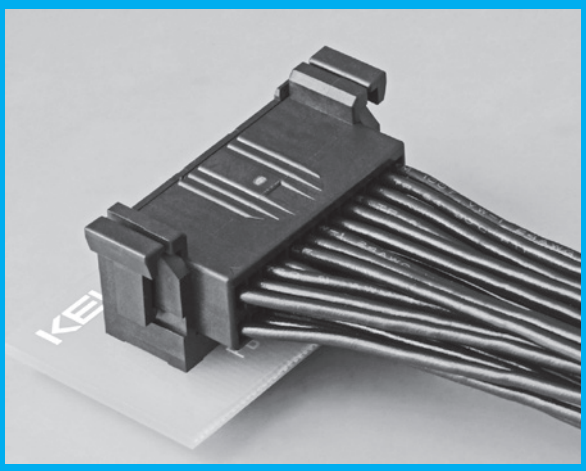

FEATURES

- Side cable-entry type connector with stacked mating structure.
- Provided with an E-Lock type locking mechanism with high operability.
- The E-Lock mechanism prevents accidental disengagement, maintaining stable contact performance.
- With a twin-leaf pinching 2 point contact structure adopted as a contact mechanism, improved reliability based on stable contact performance is ensured.
- Three sizes : 26, 36 and 40 pins.
- For discrete cable. (#22 AWG, #24 AWG and #26 AWG)

ORDER CODE

FBC02-□□□-1

① ② ③

*Please order in multiples of the quantity per package.

① 【Type】 FBC02 : Plug (Cable side connector)
② 【Number of contacts】 026 : 26 pin 036 : 36 pin 040 : 40 pin
③ 【Housing Color】 1 : Black

*Above order code FBC02-□□□-1 is for the housing only, contact terminals are sold separately. About #587 order code,Please refer to the bottom of this page.

ORDER CODE

FBC11-□□□-1-B

① ② ③ ④

*Please order in multiples of the quantity per package.

① 【Type】 FBC11 : Receptacle (PCB side connector)
② 【Number of contacts】 026 : 26 pin 036 : 36 pin 040 : 40 pin
③ 【Insulator Color】 1 : Black
④ 【Height】 B : 3.5mm

SPECIFICATIONS

Material and plating	
Insulator material	Glass-filled Nylon 66(UL94V-0)
Contact material	[FBC02]Copper alloy [FBC11]Brass
Contact plating	[FBC02] (Contact area)Gold over Nickel (Crimping area)Tin over Nickel [FBC11] Gold over Nickel

Electrical Characteristics	
Current rating	3A per contact
Contact resistance	40mΩ max.
Dielectric withstanding voltage	650V AC for 1 minute
Insulation resistance	1000MΩ min. at 500V DC
Operating temperature	-40°C to +85°C
Recommended cable	#22/24/26 AWG Discrete wire cables (Insulation Dia.: φ1.0～φ1.5mm)

Contact Terminal

Unit : mm(inch)

◆**Contact terminal for FBC02-□□□-1 plug (Cable side connector)**

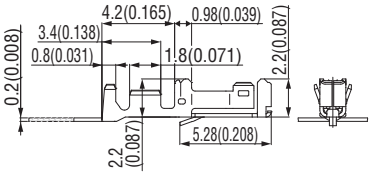

▶ **Product Table**

Packaging style
Tape&Reel

Part Number	Number of packaging
#587	10,000

ORDER CODE

#587

①

*Please order in multiples of the quantity per package.

① 【Contact】 #587 : Crimping type contact for FBC02

Assembly Tool

Unit : mm(inch)

▶ **Crimping Machine**

Mating Contact	#587	Crimping Machine	LPC220S
Manufacturer	JAPAN AUTOMATIC MACHINE CO., LTD	Applicator	EFS841800

A crimping machine and applicator are available for purchase from Japan Automatic Machine Co., Ltd.

B.C.E. S.r.l. Via Regina Pacis, 54/c - I 41049 Sassuolo (MO) Tel.: (+39) 0536 811616 - Fax.: (+39) 0536 811500 e-mail: bce@bce.it - Website: www.bce.it

FBC02-□□□-1 (Plug, Cable side connector, Housing)

Unit : mm(inch)

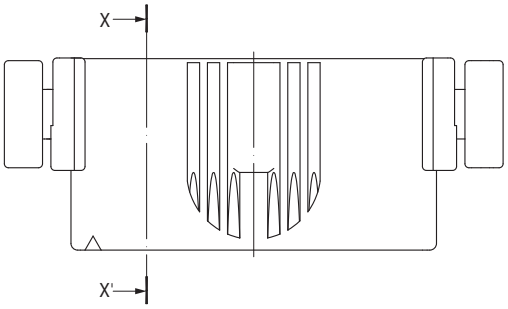

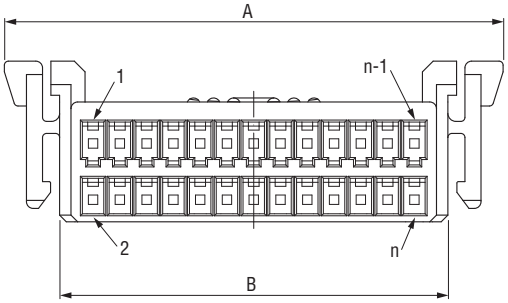

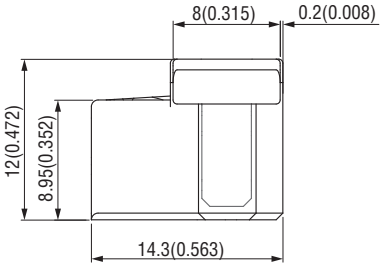

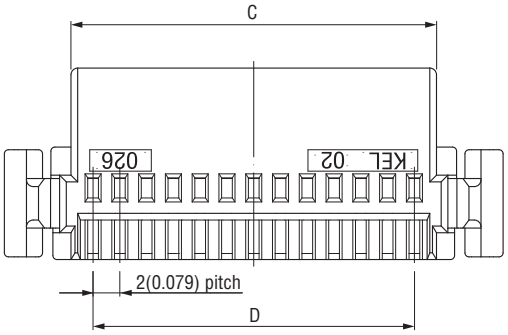

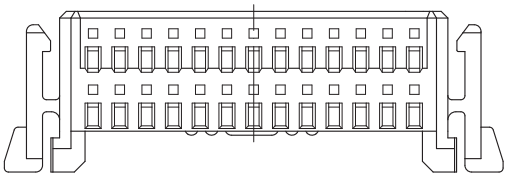

X-X′Cross Section

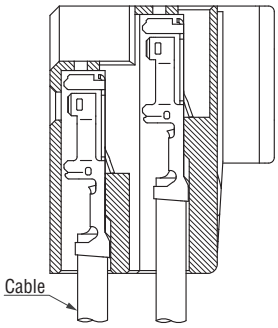

"n" is number of contacts.

Packaging style
Tray

Product Table / Dimensions

No. of contacts	Part Number	A	B	C	D	Number of packaging
26	FBC02-026-1	37.25 (1.467)	29.0 (1.142)	27.3 (1.075)	24.0 (0.945)	125
36	FBC02-036-1	47.25 (1.860)	39.0 (1.535)	37.3 (1.469)	34.0 (1.339)	100
40	FBC02-040-1	51.25 (2.018)	43.0 (1.693)	41.3 (1.626)	38.0 (1.496)	100

FBC11-□□□-1-B (Receptacle, PCB side connector)

Unit : mm(inch)

Printed Circuit Board Layout (Component Side View)

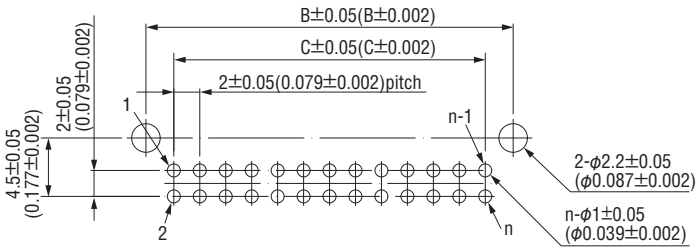

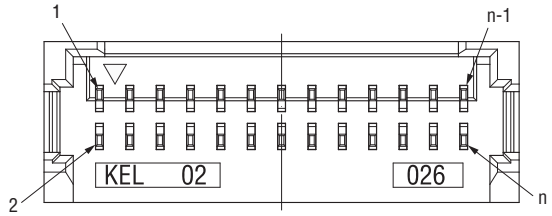

X-X′Cross Section

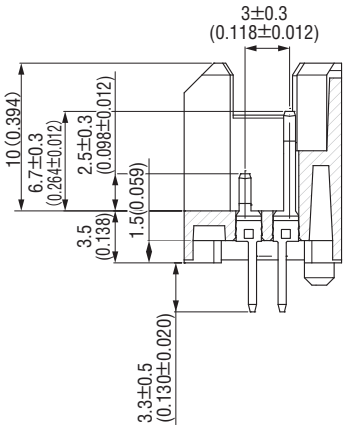

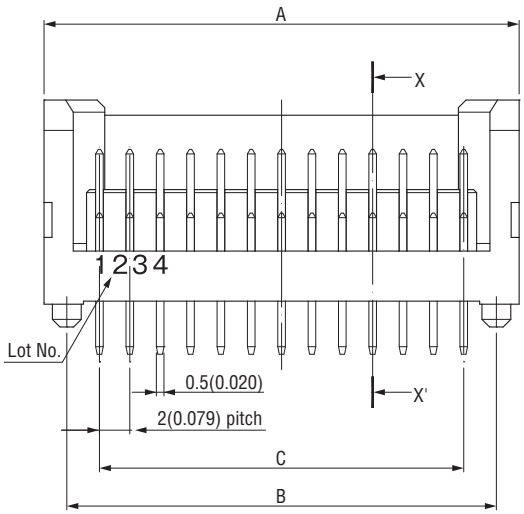

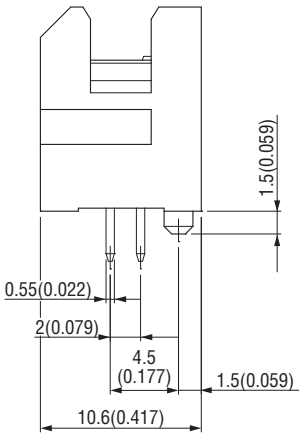

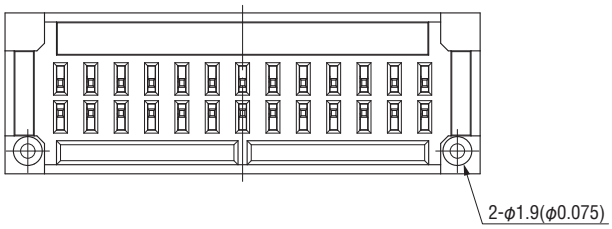

Packaging style
Pipe

Product Table / Dimensions

No. of contacts	Part Number	A	B	C	Number of packaging
26	FBC11-026-1-B	31.3 (1.232)	28.3 (1.114)	24.0 (0.945)	16
36	FBC11-036-1-B	41.3 (1.626)	38.3 (1.508)	34.0 (1.339)	12
40	FBC11-040-1-B	45.3 (1.783)	42.3 (1.665)	38.0 (1.496)	11

8622E SERIES

0.635mm PITCH CONNECTOR FOR 0.635mm PITCH FLAT CABLE

RoHS Compliant

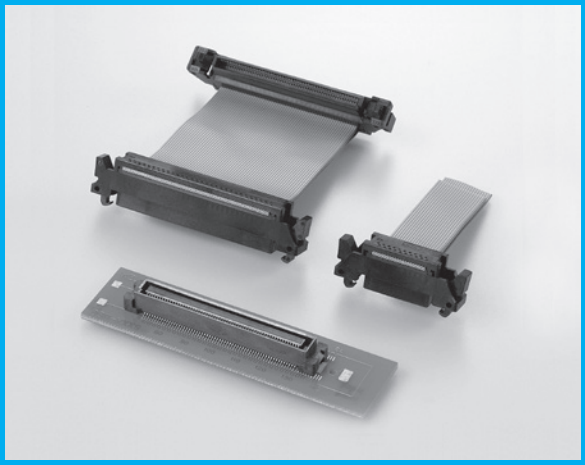

FEATURES

- Highly reliable design with effective mating length of 1.4mm(0.055").
- IDC for 0.635mm(0.025") flat ribbon cable(#30 AWG).
  *The connector is applicable to two overlaid flat cables.
- Connectors with the Eject-Lock mechanism, allowing one-handed insertion and release.
- Easy and secure connection can be achieved with KEL's original termination form.
- PCB side connector(Pulg, 8630E series) is able to mate with 8601 series.
- Coplanarity of 0.1mm(8630E).

ORDER CODE

8622□ - □□□

① ②

*Please order in multiples of the quantity per package.

① 【Type】 Receptacle (Cable side connector), Ejector type **8622E :** With strain relief **8622R :** Without strain relief

② 【Number of contacts】 **040 :** 40 pin **080 :** 80 pin **100 :** 100 pin **120 :** 120 pin

ORDER CODE

8630E - □□□ S - □

① ② ③ ④

*Please order in multiples of the quantity per package.

① 【Type】 **8630E :** Plug (PCB side connector)

② 【Number of contacts】 **040 :** 40 pin **080 :** 80 pin **100 :** 100 pin **120 :** 120 pin

③ 【Contact tail style】 **S :** Straight

④ 【Pick&Place cap】 **P :** With Pick&Place cap **Omit :** Without Pick&Place cap

SPECIFICATIONS

Material and plating		Electrical Characteristics	
Insulator material	[8622□] Glass-filled Nylon 66 (UL94V-0), Black [8630E] Glass-filled LCP (UL94V-0), Black	Current rating	0.5A per contact
		Contact resistance	50mΩ max.
		Dielectric withstanding voltage	200V AC for 1minute
		Insutulation resistance	100MΩ min.at 250V DC
Contact material	Copper alloy	Operating temperature	-40°C to +85°C
Contact plating	Gold over Nickel	Applicable cable	#30 AWG (7/0.102) Flat ribbon cable

Mating Drawing

Unit : mm(inch)

PCB side connector(Plug, 8630E Series) is able to mate with 8622E(R) Series and 8601 Series.

◆Mating for Board to board connector

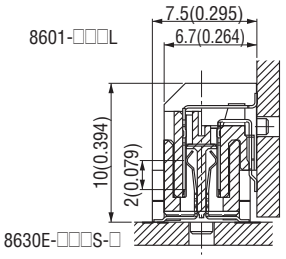

◆Mating for Board to cable connector

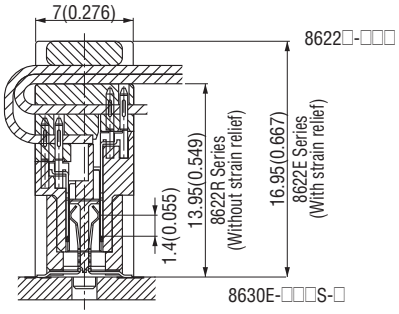

8622□-□□□ (Receptacle, Cable side connector)

Unit : mm(inch)

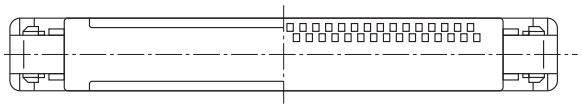

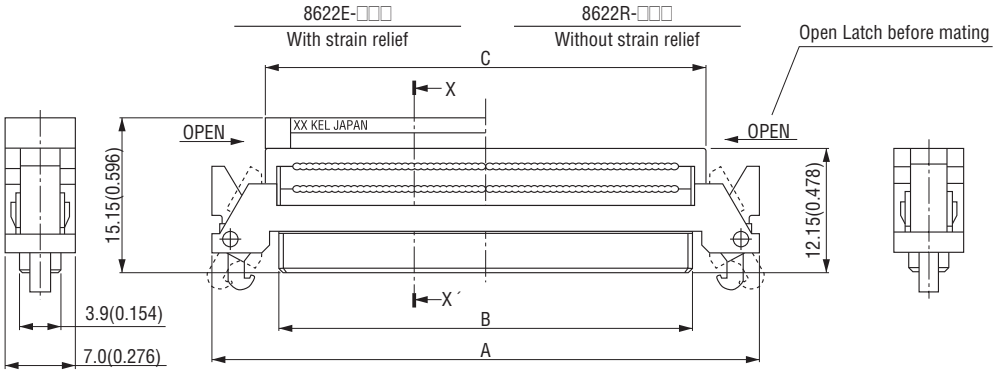

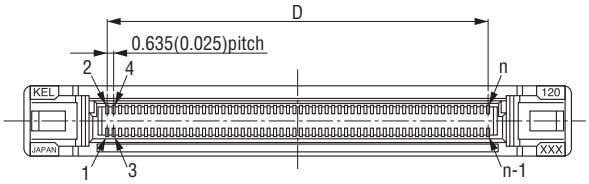

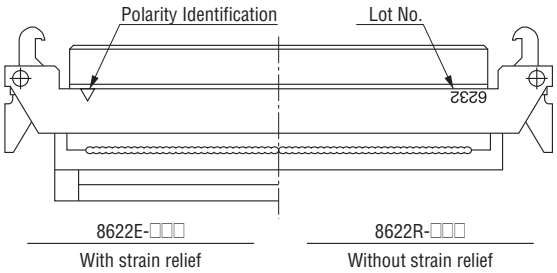

X-X′Cross Section

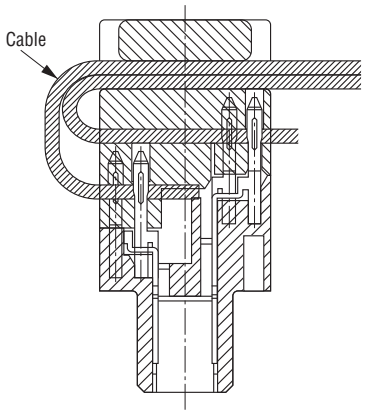

"n" is number of contacts.

Packaging style
Pipe

Product Table / Dimensions

No. of contacts	Part Number	A	B	C	D	Number of packaging
40	8622□-040	28.95 (1.140)	15.75 (0.620)	18.35 (0.722)	12.065 (0.475)	17
80	8622□-080	41.65 (1.640)	28.45 (1.120)	31.05 (1.222)	24.765 (0.975)	12
100	8622□-100	48.00 (1.890)	34.80 (1.370)	37.40 (1.472)	31.115 (1.225)	10
120	8622□-120	54.35 (2.140)	41.15 (1.620)	43.75 (1.722)	37.465 (1.475)	9

8630E-□□□S-□ (Plug, PCB side connector)

Unit : mm(inch)

Printed Circuit Board Layout (Component Side View)

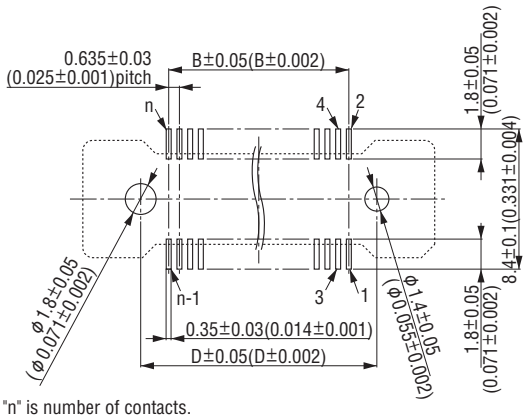

"n" is number of contacts.

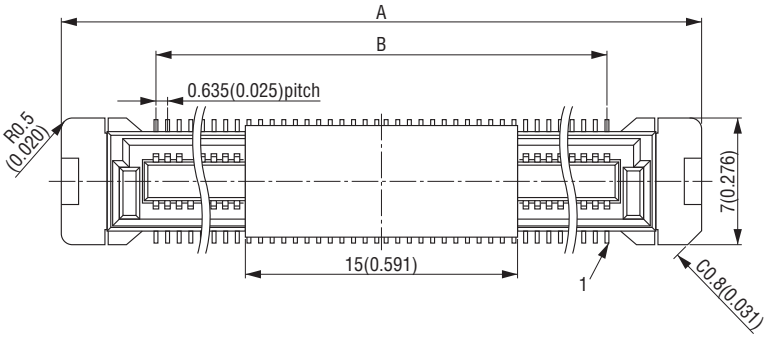

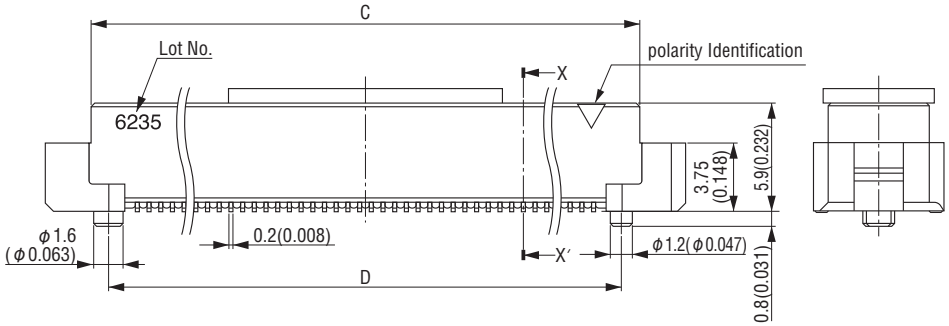

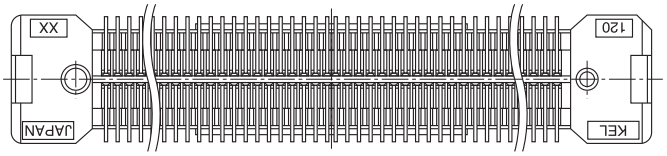

X-X′Cross Section

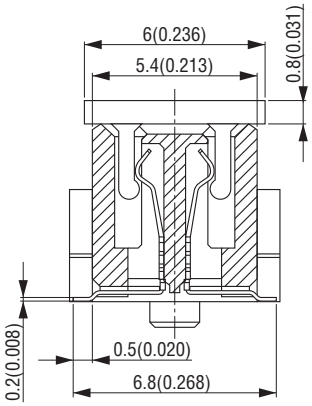

*Figure of with pick&place cap type is used.

Packaging style
Tray

Product Table / Dimensions

No. of contacts	Part Number	A	B	C	D	Number of packaging
40	8630E-040S-□	22.35 (0.880)	12.065 (0.475)	17.35 (0.683)	15.35 (0.604)	60
80	8630E-080S-□	35.05 (1.380)	24.765 (0.975)	30.05 (1.183)	28.05 (1.104)	40
100	8630E-100S-□	41.40 (1.630)	31.115 (1.225)	36.40 (1.433)	34.40 (1.354)	30
120	8630E-120S-□	47.75 (1.880)	37.465 (1.475)	42.75 (1.683)	40.75 (1.604)	30

CABLE ASSEMBLY

ORDER CODE

8622E-□□□-□□□-A1□□

① ② ③ ④

①	【Type】 Receptacle (Cable side connector), Ejector type **8622E :** With strain relief
②	【Number of contacts】 **040 :** 40 pin **080 :** 80 pin **100 :** 100 pin **120 :** 120 pin
③	【Cable length(cm)】 **L :** Dimension (Example:013=13cm)
④	【Wiring code】 **A1AN, A1B1**

ORDER CODE

8622R-□□□-□□□-A1□□

① ② ③ ④

①	【Type】 Receptacle (Cable side connector), Ejector type **8622R :** Without strain relief
②	【Number of contacts】 **040 :** 40 pin **080 :** 80 pin **100 :** 100 pin **120 :** 120 pin
③	【Cable length(cm)】 **L :** Dimension (Example:013=13cm)
④	【Wiring code】 **A1AN, A1B1**

Cable assembly

Unit : mm(inch)

Wiring Code: A1AN

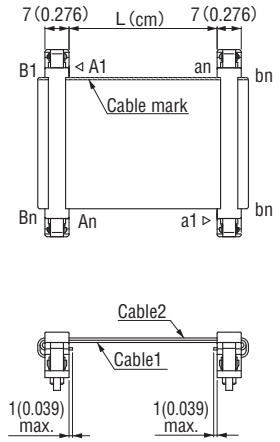

Wiring Diagram

Cable1	Cable2
A1 — an	B1 — bn
A2 — an-1	B2 — bn-1
A3 — an-2	B3 — bn-2
An-1 — a2	Bn-1 — b2
An — a1	Bn — b1

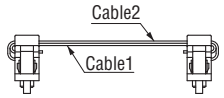

Component Side View

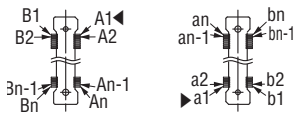

Wiring Code: A1B1

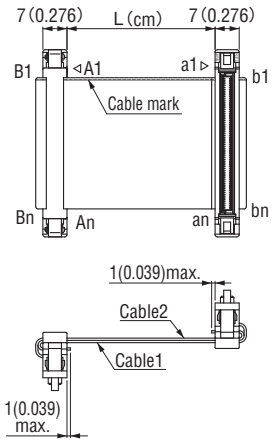

Wiring Diagram

Cable1	Cable2
A1 — b1	B1 — a1
A2 — b2	B2 — a2
A3 — b3	B3 — a3
An-1 — bn-1	Bn-1 — an-1
An — bn	Bn — an

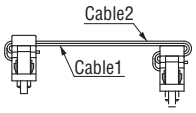

Component Side View

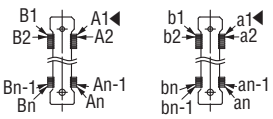

Cable assembly

Unit : mm(inch)

Wiring Code: A1AN

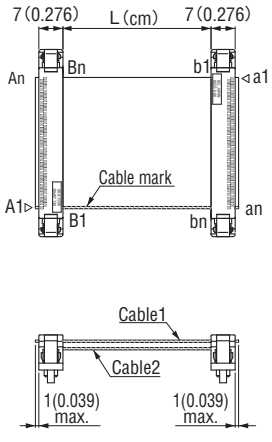

Wiring Diagram

Cable1	Cable2
A1 — an	B1 — bn
A2 — an-1	B2 — bn-1
A3 — an-2	B3 — bn-2
An-1 — a2	Bn-1 — b2
An — a1	Bn — b1

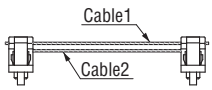

Component Side View

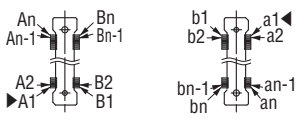

Wiring Code: A1B1

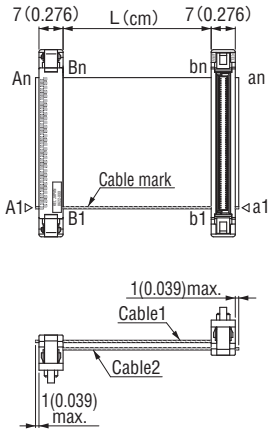

Wiring Diagram

Cable1	Cable2
A1 — b1	B1 — a1
A2 — b2	B2 — a2
A3 — b3	B3 — a3
An-1 — bn-1	Bn-1 — an-1
An — bn	Bn — an

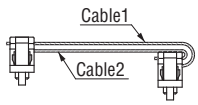

Component Side View

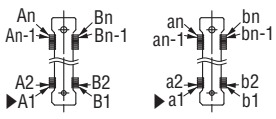

8925E SERIES

RoHS Compliant

1.27mm PITCH LOW PROFILE CONNECTORS FOR 0.635MM PITCH FLAT CABLE

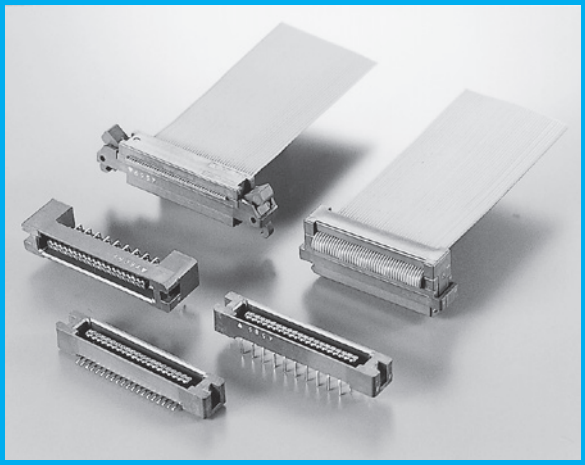

FEATURES

- Highly reliable contact design with independent and synchronized spring.
- Low insertion and withdrawal force.
- Insulator protects contacts from damage.
- Mating height is only 11.8mm(0.465")(8925R).
- Possible to make "daisy chain"cable assemblies.
- Cable connector (Receptacle) is able to mate with 8913 series(8925 series: non ejector type).
- Equipped with the Eject-Lock mechanism, it allows one-handed insertion and release.(8925E and 8925R series).
- PCB side connector variations:Straight, Right angle and SMT.

ORDER CODE

8925□ - □□□ - 179 - F

① ② ③ ④

*Please order in multiples of the quantity per package.

① 【Type】 Receptacle(Cable side connector) **8925 :** Non ejector type, With strain relief (excl. 20, 30, 60 pins)
8925E : Ejector type, With strain relief **8925R :** Ejector type, Without strain relief

② 【Number of contacts】 **020 :** 20pin **030 :** 30pin **040 :** 40pin **050 :** 50pin **060 :** 60pin **068 :** 68pin **080 :** 80pin **100 :** 100pin

③ 【Contact name】 **179**

④ 【RoHS】 **F :** RoHS Compliant

ORDER CODE

893□E - □□□ - 178□□ - F

① ② ③ ④ ⑤

*Please order in multiples of the quantity per package.

① 【Type】 Plug(PCB side connector) **8930E :** Without hooks (SMT) **8931E :** With hooks (Through hole)

② 【Number of contacts】 **020 :** 20pin **030 :** 30pin **040 :** 40pin **050 :** 50pin **060 :** 60pin **068 :** 68pin **080 :** 80pin **100 :** 100pin

③ 【Contact name】 **178**

④ 【Contact tail style】 **S :** Straight, Through hole **L :** Right angle, Through hole **MS :** Straight, SMT (8930E)

⑤ 【RoHS】 **F :** RoHS Compliant

SPECIFICATIONS

Material and plating	
Insulator material	[8925E/8925R/8925] Glass-filled Nylon 66 (UL 94V-0), Brown [8930E/8931E] Glass-filled PPS (UL 94V-0), Brown
Contact material	Copper alloy
Contact plating	Gold over Nickel
Retention clip material	Copper alloy
Retention clip plating	Tin copper over Nickel

Electrical Characteristics	
Current rating	0.5A per contact
Contact resistance	40mΩ max.
Dielectric withstanding voltage	[8925□]300V AC for 1 minute [893□E]650V AC for 1minute
Insulation resistance	[8925□]1,000MΩ min. at 250V DC [893□E]1,000MΩ min. at 500V DC
Operating temperature	-55°C to +85°C
Recommended cable	#30 AWG (7/0.102), 0.635mm (25mil) pitch, Flat ribbon cable

Low profile design

Unit : mm(inch)

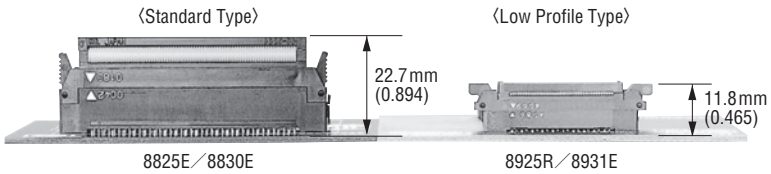

The 8925(E/R) series uses the same proven contact design as the 8900 series of board-to-board connectors. In addition, this low profile IDC connector system features a new locking ejector mechanism.The 8925R/8930E series has a mated height of 11.8mm which is significantly less than previous IDC connector systems.(KEL 8825E/8830E series)

Mating Drawing

Unit : mm(inch)

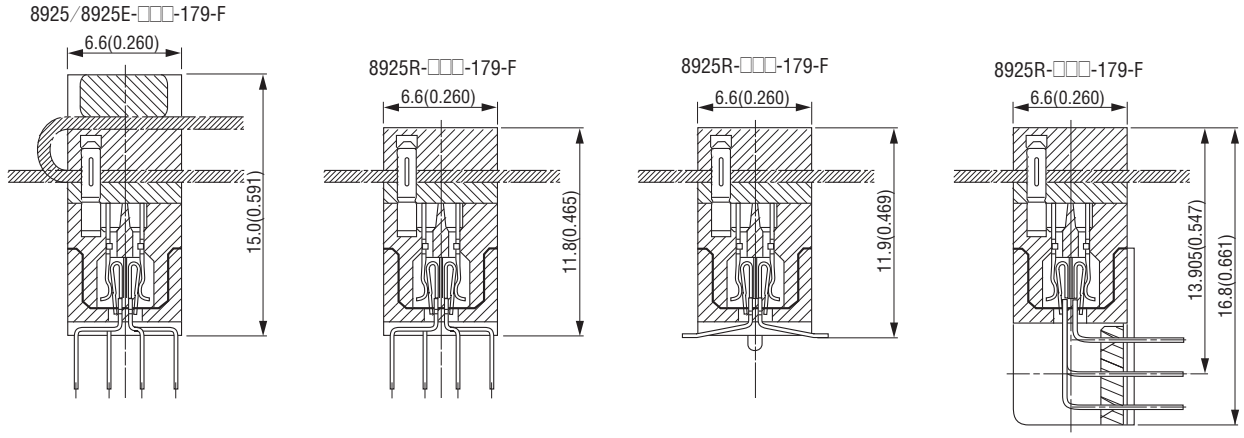

8931E-□□□-178S-F	8931E-□□□-178S-F	8930E-□□□-178MS-F	8931E-□□□-178L-F
With Strain Relief	Without Strain Relief	Without Strain Relief	Without Strain Relief

8925E Series Mating Matrix

PLUG CONNECTOR	RECEPTACLE CONNECTOR		
	8925-□□□-179-F	8925E-□□□-179-F	8925R-□□□-179-F
8911-□□□-178S□-A-F	No	No	No
8911-□□□-178S□-C-F	No	No	No
8913-□□□-178S□-A-F	△ Mated height : 15.0(0.591)	No	No
8913-□□□-178S□-C-F	△ Mated height : 17.0(0.669)	No	No
8911-□□□-178L□-F	No	No	No
8913-□□□-178MS□-A-F	△ Mated height : 15.0(0.591)	No	No
8931E-□□□-178S-F	○ Mated height : 15.0(0.591)	○ Mated height : 15.0(0.591)	○ Mated height : 11.8(0.465)
8931E-□□□-178L-F	○ Mated distance : 20.0(0.787)	○ Mated distance : 20.0(0.787)	○ Mated distance : 16.8(0.661)
8930E-□□□-178MS-F	○ Mated height : 15.1(0.594)	○ Mated height : 15.1(0.594)	○ Mated height : 11.9(0.469)

Note: △ excl. 68 pin.

Product Concept and Features

Highly reliable and original termination form

The terminating process of 8925E series starts with the flat cable of 0.635mm pitch placed between Covers #1 and #2 which aligns and prevents any deviation between the cable and connector.
The contacts are held in position by the insulator body.
The tips of the contact forks with guide taper and latch are sharp and break through the cable sheath to provide a gas tight termination.
The contact rib which is purposely rounded creates high pressure to insure a reliable termination without damage during the termination process.
The connector can be terminated with a minimum of special tooling in a standard press as well as a press for MIL-STD type connectors.

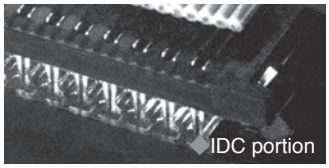

◆Exploded View

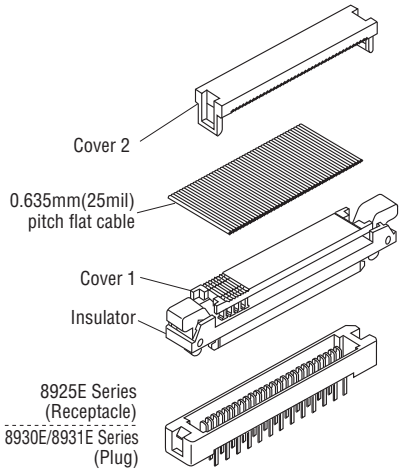

◆8925(E) Series contact

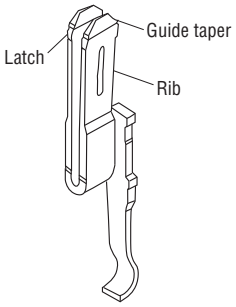

◆Insulation Displacement Process

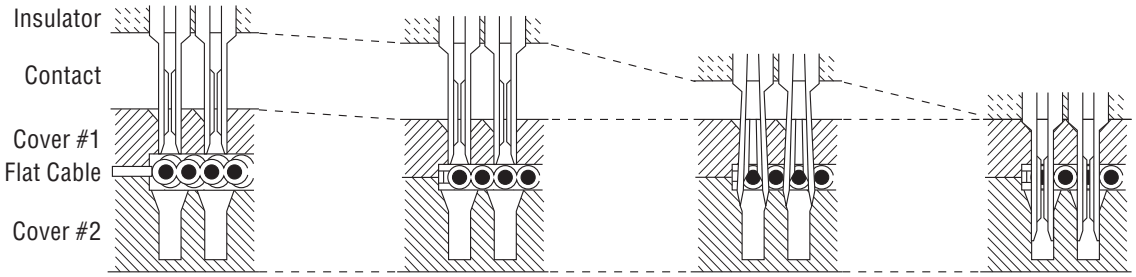

Stage1

The contact is held in position by the insulator body and the contact forks are guided by Cover #1.

➔

Stage2

As pressure is applied the cable is aligned in the grooves of Cover #1 and#2.

➔

Stage3

Cover #1 and #2 hold the cable and stabilize the contact/conductor interface.
The contact slides through Cover #1 which supports and aligns the cable throughout the termination process.

➔

Stage4

The contacts terminate the and slide into Cover #2.The contact forks are compressed by Cover #2 and form a gas tight termination.

➔ The reliability of the termination process depends on maintaining proper alignment of the cable to the connector, the contact to the conductor, and the stability of contact in the connector. The design of the 8925(E) satisfies the requirements as explained above.

8925-□□□-179-F (Receptacle, Cable side connector, Without locking ejectors)

Unit : mm(inch)

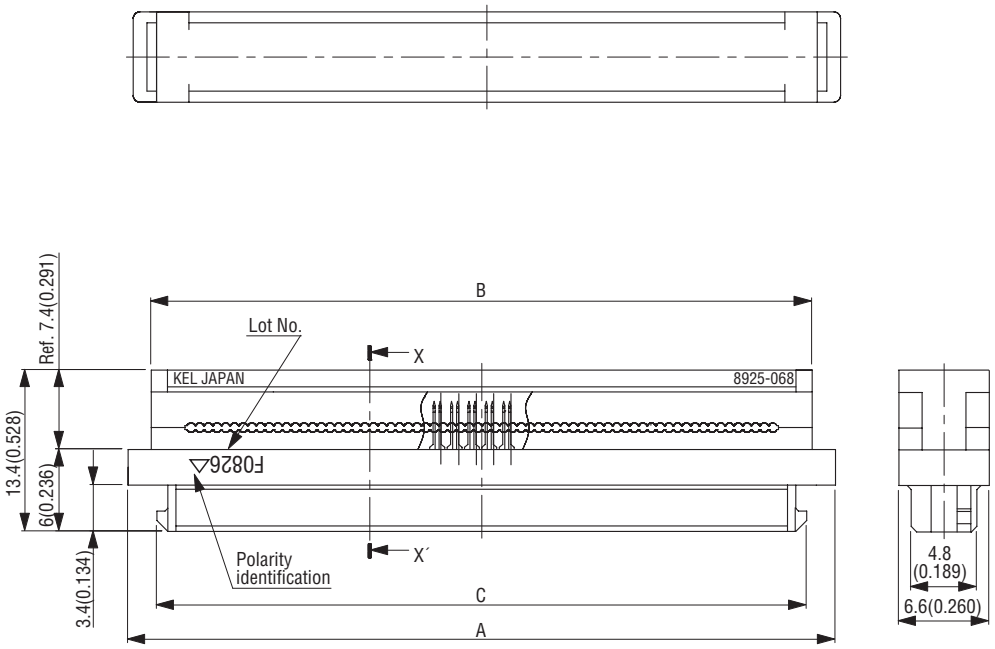

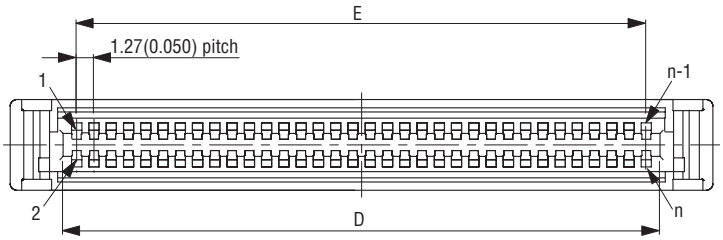

X-X′Cross Section

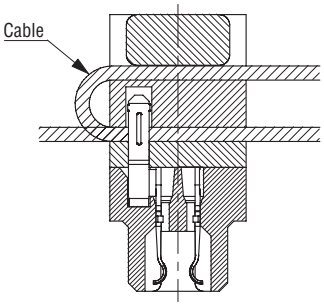

Packaging style
Pipe

Product Table / Dimensions

No. of contacts	Part Number	A	B	C	D	E	Number of packaging
40	8925-040-179-F	33.93 (1.336)	30.53 (1.202)	29.73 (1.170)	26.13 (1.029)	24.13 (0.950)	15
50	8925-050-179-F	40.28 (1.586)	36.88 (1.452)	36.08 (1.420)	32.48 (1.279)	30.48 (1.200)	12
68	8925-068-179-F	51.71 (2.036)	48.31 (1.902)	47.51 (1.870)	43.91 (1.729)	41.91 (1.650)	10
80	8925-080-179-F	59.33 (2.336)	55.93 (2.202)	55.13 (2.170)	51.53 (2.029)	49.53 (1.950)	8
100	8925-100-179-F	72.03 (2.836)	68.63 (2.702)	67.83 (2.670)	64.23 (2.529)	62.23 (2.450)	7

B.C.E. S.r.l. Via Regina Pacis, 54/c - I 41049 Sassuolo (MO) Tel.: (+39) 0536 811616 - Fax.: (+39) 0536 811500 e-mail: bce@bce.it - Website: www.bce.it

8925E/8925R-□□□-179-F (Receptacle, Cable side connector, With locking ejectors)

Unit : mm(inch)

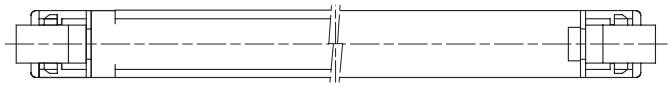

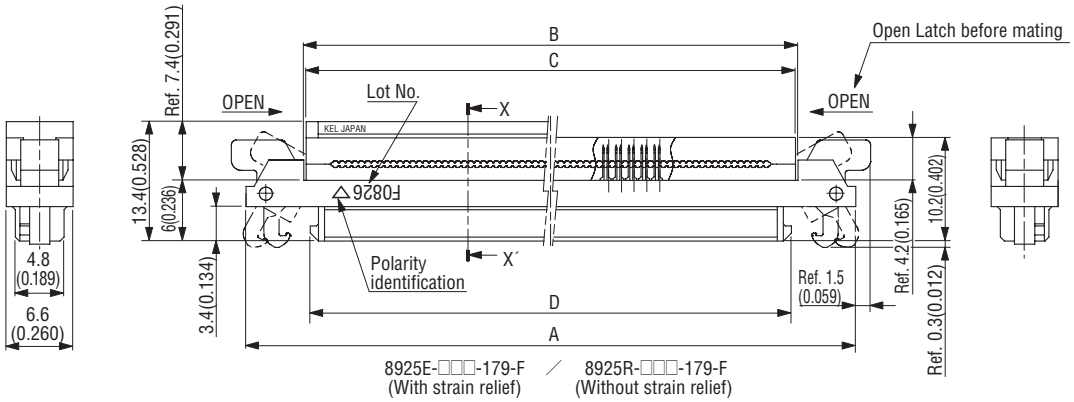

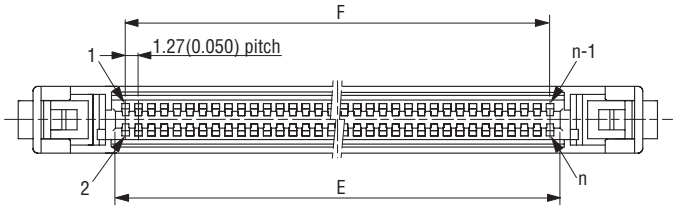

X-X′Cross Section

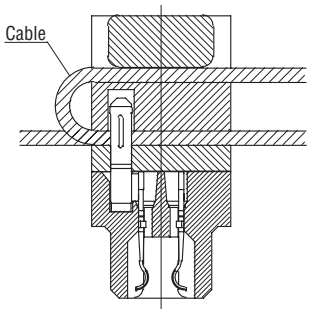

Packaging style
Pipe

Product Table / Dimensions

No. of contacts	Part Number	A	B	C	D	E	F	Number of packaging
20	8925E/8925R-020-179-F	29.63 (1.167)	18.23 (0.718)	17.83 (0.702)	17.03 (0.670)	13.43 (0.529)	11.43 (0.450)	15
30	8925E/8925R-030-179-F	35.98 (1.417)	24.58 (0.968)	24.18 (0.952)	23.38 (0.920)	19.78 (0.779)	17.78 (0.700)	13
40	8925E/8925R-040-179-F	42.33 (1.667)	30.93 (1.218)	30.53 (1.202)	29.73 (1.170)	26.13 (1.029)	24.13 (0.950)	11
50	8925E/8925R-050-179-F	48.68 (1.917)	37.28 (1.468)	36.88 (1.452)	36.08 (1.420)	32.48 (1.279)	30.48 (1.200)	10
60	8925E/8925R-060-179-F	55.03 (2.167)	43.63 (1.718)	43.23 (1.702)	42.43 (1.670)	38.83 (1.529)	36.83 (1.450)	8
68	8925E/8925R-068-179-F	60.11 (2.367)	48.71 (1.918)	48.31 (1.902)	47.51 (1.870)	43.91 (1.729)	41.91 (1.650)	8
80	8925E/8925R-080-179-F	67.73 (2.667)	56.33 (2.218)	55.93 (2.202)	55.13 (2.170)	51.53 (2.029)	49.53 (1.950)	7
100	8925E/8925R-100-179-F	80.43 (3.167)	69.03 (2.718)	68.63 (2.702)	67.83 (2.670)	64.23 (2.529)	62.23 (2.450)	6

8931E-□□□-178S-F (Plug, PCB side connector, Straight)

Unit : mm(inch)

Printed Circuit Board Layout (Component Side View)

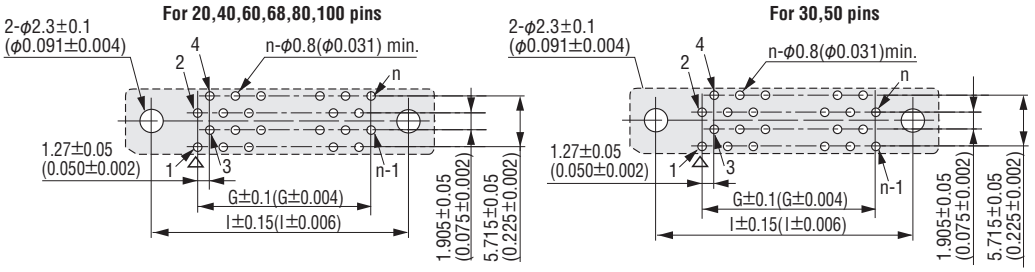

Recommended PCB Thickness $t=1.6^{+0.2}_{-0.1}$ $(0.063^{+0.008}_{-0.004})$ ▽ =Polarity identification

"n" is number of contacts.

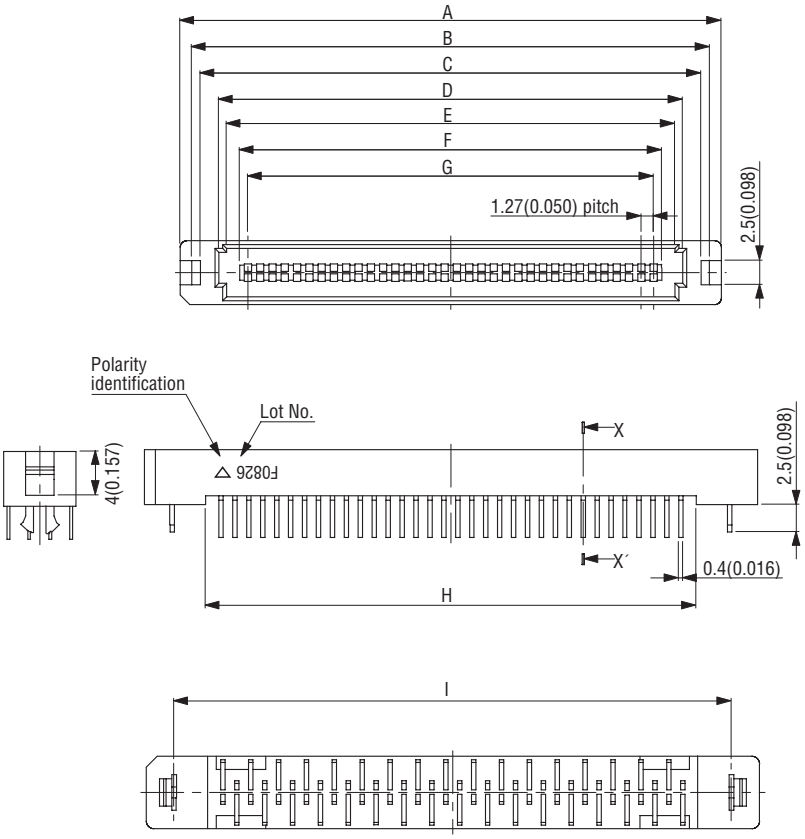

X-X′Cross Section

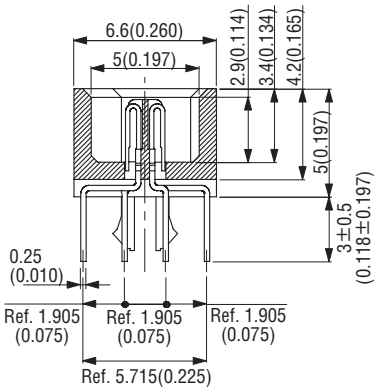

Packaging style
Pipe

Product Table / Dimensions

No. of contacts	Part Number	A	B	C	D	E	F	G	H	I	Number of packaging
20	8931E-020-178S-F	25.43 (1.001)	23.03 (0.907)	21.23 (0.836)	17.43 (0.686)	15.83 (0.623)	13.13 (0.517)	11.43 (0.450)	14.23 (0.560)	20.32 (0.800)	20
30	8931E-030-178S-F	31.78 (1.251)	29.38 (1.157)	27.58 (1.086)	23.78 (0.936)	22.18 (0.873)	19.48 (0.767)	17.78 (0.700)	20.58 (0.810)	26.67 (1.050)	16
40	8931E-040-178S-F	38.13 (1.501)	35.73 (1.407)	33.93 (1.336)	30.13 (1.186)	28.53 (1.123)	25.83 (1.017)	24.13 (0.950)	26.93 (1.060)	33.02 (1.300)	13
50	8931E-050-178S-F	44.48 (1.751)	42.08 (1.657)	40.28 (1.586)	36.48 (1.436)	34.88 (1.373)	32.18 (1.267)	30.48 (1.200)	33.28 (1.310)	39.37 (1.550)	11
60	8931E-060-178S-F	50.83 (2.001)	48.43 (1.907)	46.63 (1.836)	42.83 (1.686)	41.23 (1.623)	38.53 (1.517)	36.83 (1.450)	39.63 (1.560)	45.72 (1.800)	10
68	8931E-068-178S-F	55.91 (2.201)	53.51 (2.107)	51.71 (2.036)	47.91 (1.886)	46.31 (1.823)	43.61 (1.717)	41.91 (1.650)	44.71 (1.760)	50.80 (2.000)	9
80	8931E-080-178S-F	63.53 (2.501)	61.13 (2.407)	59.33 (2.336)	55.53 (2.186)	53.93 (2.123)	51.23 (2.017)	49.53 (1.950)	52.33 (2.060)	58.42 (2.300)	7
100	8931E-100-178S-F	76.23 (3.001)	73.83 (2.907)	72.03 (2.836)	68.23 (2.686)	66.63 (2.623)	63.93 (2.517)	62.23 (2.450)	65.03 (2.560)	71.12 (2.800)	6

B.C.E. S.r.l. Via Regina Pacis, 54/c - I 41049 Sassuolo (MO) Tel.: (+39) 0536 811616 - Fax.: (+39) 0536 811500 e-mail: bce@bce.it - Website: www.bce.it

8931E-□□□-178L-F (Plug, PCB side connector, Right angle)

Unit : mm(inch)

Printed Circuit Board Layout (Component Side View)

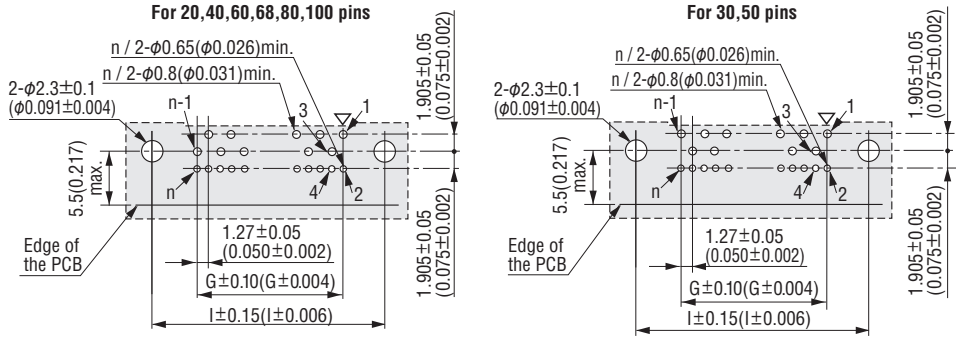

Recommended PCB Thickness t=1.6 $^{+0.2}_{-0.1}$ (0.063 $^{+0.008}_{-0.004}$) ▽ =Polarity identification

"n" is number of contacts.

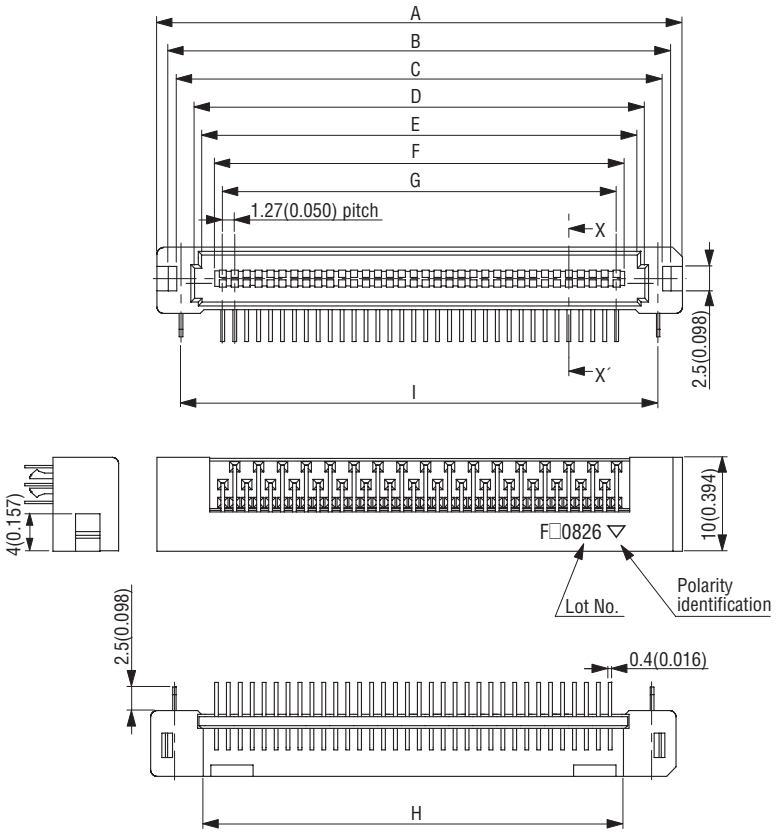

X-X′Cross Section

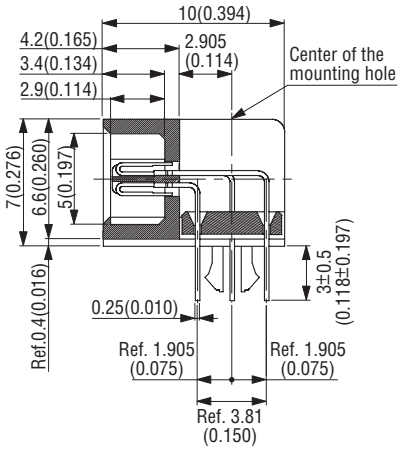

Packaging style
Pipe

Product Table / Dimensions

No. of contacts	Part Number	A	B	C	D	E	F	G	H	I	Number of packaging
20	8931E-020-178L-F	25.43 (1.001)	23.03 (0.907)	21.23 (0.836)	17.43 (0.686)	15.83 (0.623)	13.13 (0.517)	11.43 (0.450)	14.23 (0.560)	20.32 (0.800)	20
30	8931E-030-178L-F	31.78 (1.251)	29.38 (1.157)	27.58 (1.086)	23.78 (0.936)	22.18 (0.873)	19.48 (0.767)	17.78 (0.700)	20.58 (0.810)	26.67 (1.050)	16
40	8931E-040-178L-F	38.13 (1.501)	35.73 (1.407)	33.93 (1.336)	30.13 (1.186)	28.53 (1.123)	25.83 (1.017)	24.13 (0.950)	26.93 (1.060)	33.02 (1.300)	13
50	8931E-050-178L-F	44.48 (1.751)	42.08 (1.657)	40.28 (1.586)	36.48 (1.436)	34.88 (1.373)	32.18 (1.267)	30.48 (1.200)	33.28 (1.310)	39.37 (1.550)	11
60	8931E-060-178L-F	50.83 (2.001)	48.43 (1.907)	46.63 (1.836)	42.83 (1.686)	41.23 (1.623)	38.53 (1.517)	36.83 (1.450)	39.63 (1.560)	45.72 (1.800)	10
68	8931E-068-178L-F	55.91 (2.201)	53.51 (2.107)	51.71 (2.036)	47.91 (1.886)	46.31 (1.823)	43.61 (1.717)	41.91 (1.650)	44.71 (1.760)	50.80 (2.000)	9
80	8931E-080-178L-F	63.53 (2.501)	61.13 (2.407)	59.33 (2.336)	55.53 (2.186)	53.93 (2.123)	51.23 (2.017)	49.53 (1.950)	52.33 (2.060)	58.42 (2.300)	8
100	8931E-100-178L-F	76.23 (3.001)	73.83 (2.907)	72.03 (2.836)	68.23 (2.686)	66.63 (2.623)	63.93 (2.517)	62.23 (2.450)	65.03 (2.560)	71.12 (2.800)	6

B.C.E. S.r.l. Via Regina Pacis, 54/c - I 41049 Sassuolo (MO) Tel.: (+39) 0536 811616 - Fax.: (+39) 0536 811500 e-mail: bce@bce.it - Website: www.bce.it

8930E-□□□-178MS-F (Plug, PCB side connector, Straight, SMT)

Unit : mm(inch)

Printed Circuit Board Layout (Component Side View)

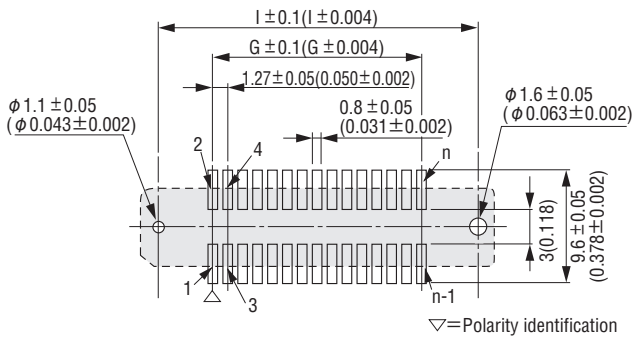

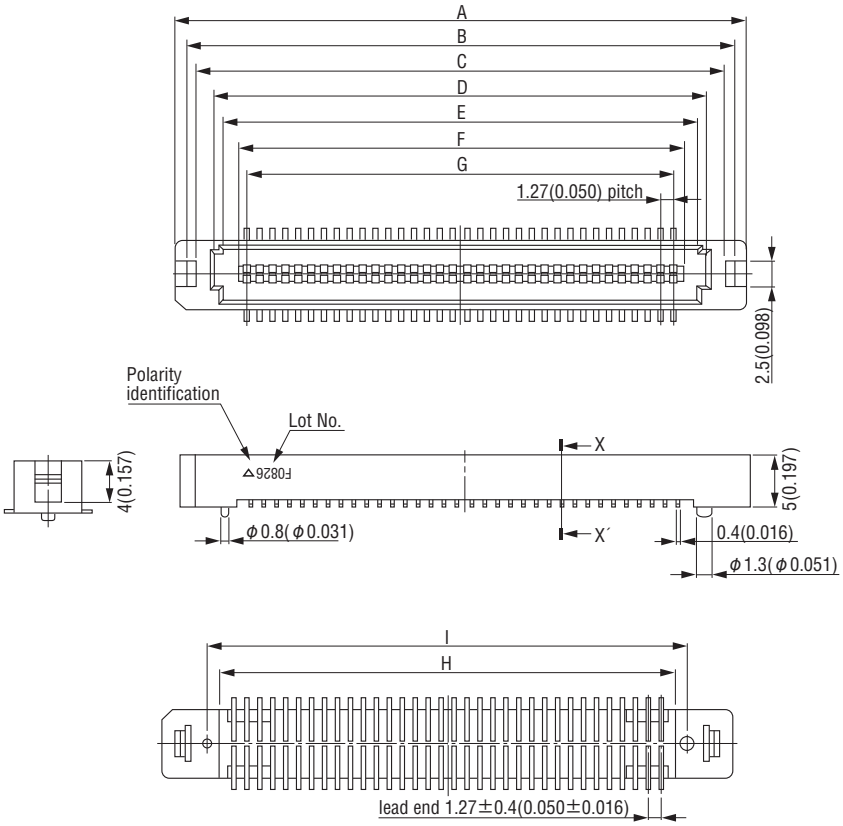

X-X′Cross Section

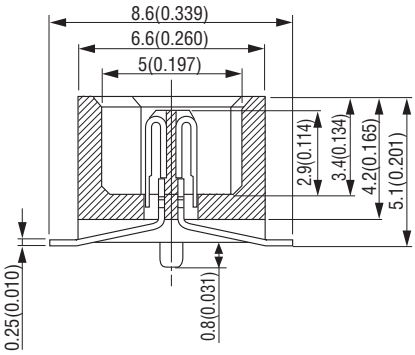

Packaging style
Pipe

Product Table / Dimensions

No. of contacts	Part Number	A	B	C	D	E	F	G	H	I	Number of packaging
20	8930E-020-178MS-F	25.43 (1.001)	23.03 (0.907)	21.23 (0.836)	17.43 (0.686)	15.83 (0.623)	13.13 (0.517)	11.43 (0.450)	14.23 (0.560)	16.51 (0.650)	20
30	8930E-030-178MS-F	31.78 (1.251)	29.38 (1.157)	27.58 (1.086)	23.78 (0.936)	22.18 (0.873)	19.48 (0.767)	17.78 (0.700)	20.58 (0.810)	22.86 (0.900)	16
40	8930E-040-178MS-F	38.13 (1.501)	35.73 (1.407)	33.93 (1.336)	30.13 (1.186)	28.53 (1.123)	25.83 (1.017)	24.13 (0.950)	26.93 (1.060)	29.21 (1.150)	13
50	8930E-050-178MS-F	44.48 (1.751)	42.08 (1.657)	40.28 (1.586)	36.48 (1.436)	34.88 (1.373)	32.18 (1.267)	30.48 (1.200)	33.28 (1.310)	35.56 (1.400)	11
60	8930E-060-178MS-F	50.83 (2.001)	48.43 (1.907)	46.63 (1.836)	42.83 (1.686)	41.23 (1.623)	38.53 (1.517)	36.83 (1.450)	39.63 (1.560)	41.91 (1.650)	10
68	8930E-068-178MS-F	55.91 (2.201)	53.51 (2.107)	51.71 (2.036)	47.91 (1.886)	46.31 (1.823)	43.61 (1.717)	41.91 (1.650)	44.71 (1.760)	46.99 (1.850)	9
80	8930E-080-178MS-F	63.53 (2.501)	61.13 (2.407)	59.33 (2.336)	55.53 (2.186)	53.93 (2.123)	51.23 (2.017)	49.53 (1.950)	52.33 (2.060)	54.61 (2.150)	8
100	8930E-100-178MS-F	76.23 (3.001)	73.83 (2.907)	72.03 (2.836)	68.23 (2.686)	66.63 (2.623)	63.93 (2.517)	62.23 (2.450)	65.03 (2.560)	67.31 (2.650)	6

CABLE ASSEMBLY

ORDER CODE

8925□-□□□-179 F-□□□ □-□□

① ② ③ ④ ⑤ ⑥ ⑦

① 【Type】 Receptacle, With strain relief
8925 : Without locking ejectors 8925E : With locking ejectors

② 【No. of contacts】 020 : 20pin 030 : 30pin 040 : 40pin 050 : 50pin 060 : 60pin 068 : 68pin 080 : 80pin 100 : 100pin
(8925 : excl. 20, 30 and 60 pins)

③ 【Contact name】 179

④ 【RoHS】 F : RoHS Compliant

⑤ 【Cable length (cm)】 L : Dimension (Example: 013=13cm)

⑥ 【Cable type】 Omit : Flat cable
S : Intermittent bonded cable* T : Twist&Flat cable*

⑦ 【Wiring code】 GG、GH、HH、GO、HO

* If you are interested in the intermittent bonded or Twist&Flat cable, please contact your local KEL sales office.

ORDER CODE

8925R-□□□-179 F-□□□ □-□□

① ② ③ ④ ⑤ ⑥ ⑦

① 【Type】 Receptacle
8925R : With locking ejectors,Without strain relief

② 【No. of contacts】 020 : 20pin 030 : 30pin 040 : 40pin 050 : 50pin 060 : 60pin 068 : 68pin 080 : 80pin 100 : 100pin

③ 【Contact name】 179

④ 【RoHS】 F : RoHS Compliant

⑤ 【Cable length (cm)】 L : Dimension (Example: 013=13cm)

⑥ 【Cable type】 Omit : Flat cable
S : Intermittent bonded cable* T : Twist&Flat cable*

⑦ 【Wiring code】 II、IJ、JJ、IO、JO

* If you are interested in the intermittent bonded or Twist&Flat cable, please contact your local KEL sales office.

▶8925(E)-8925(E) Cable assemblies

Unit : mm(inch)

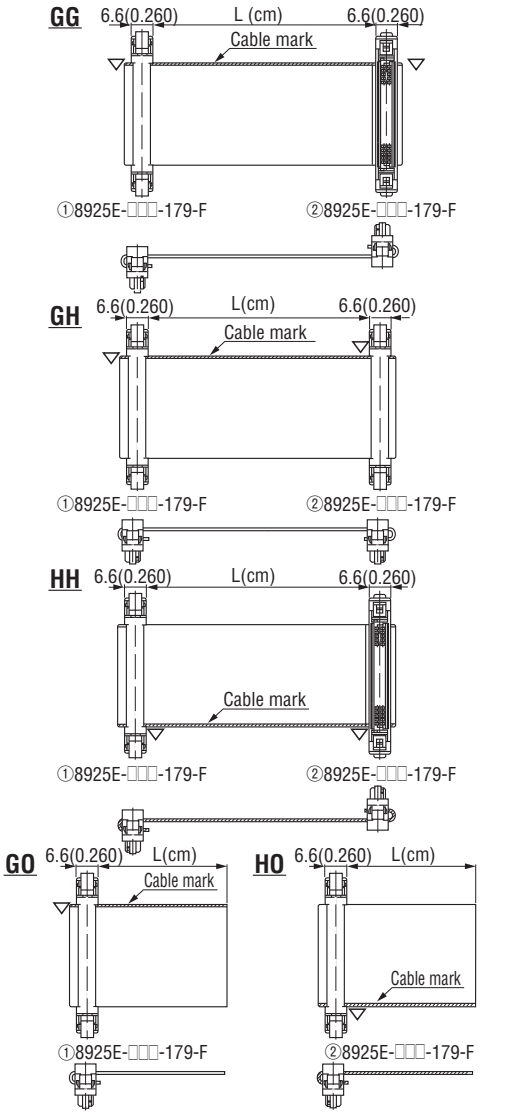

▶8925R-8925R Cable assemblies

Unit : mm(inch)

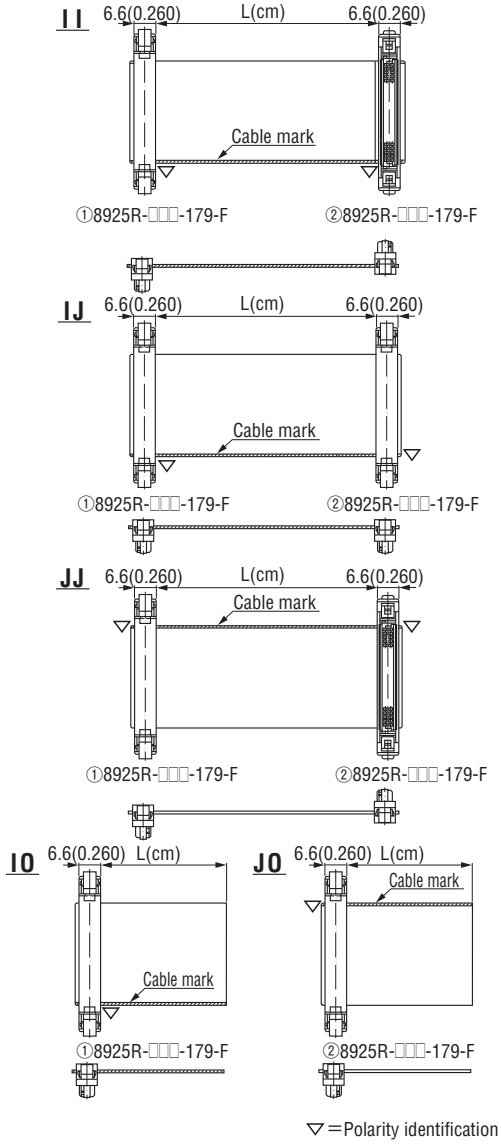

*Intermittent bonded and Twist&Flat cable have a restriction on cable length (L dimension) because they are terminated at the fused part.
*For GO, HO, IO and JO codes, orders are accepted in even quantities. *Harness end has an extra of apporoximate 1mm beyond the connector edge.

ORDER CODE

8925E-□□□-179 F-□□□ □-□□

① ② ③ ④ ⑤ ⑥ ⑦

①	【Type】Receptacle, With strain relief **8925E** : With locking ejectors
②	【No. of contacts】 **020** : 20pin **030** : 30pin **040** : 40pin **050** : 50pin **060** : 60pin **068** : 68pin **080** : 80pin **100** : 100pin
③	【Contact name】 **179**
④	【RoHS】 **F** : RoHS Compliant
⑤	【Cable length (cm)】 **L** : Dimension (Example: 013=13cm)
⑥	【Cable type】 **Omit** : Flat cable **S** : Intermittent bonded cable* **T** : Twist&Flat cable*
⑦	【Wiring code】 **GI, GJ, HI, HJ**

* If you are interested in the intermittent bonded or Twist&Flat cable, please contact your local KEL sales office.

▶8925E-8925R Cable assemblies

Unit : mm(inch)

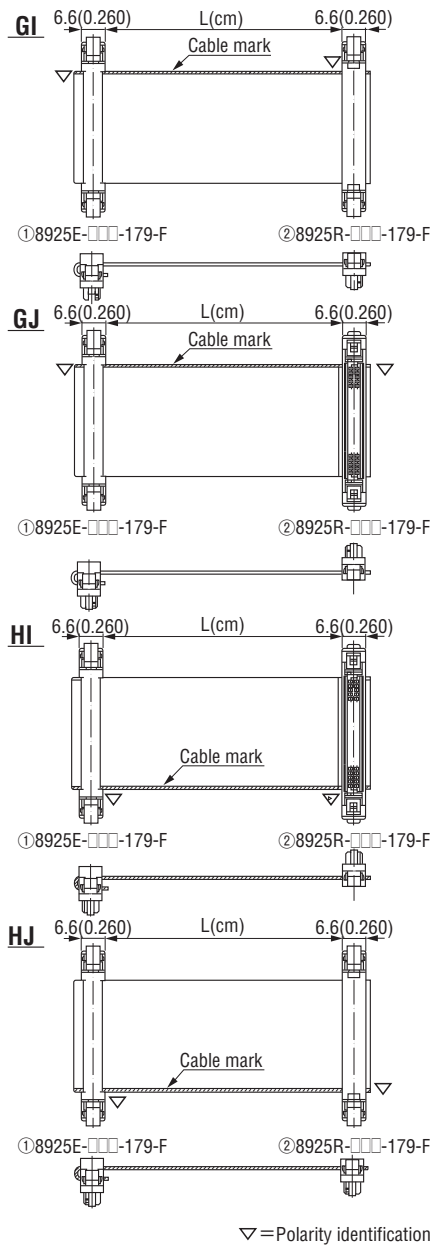

ORDER CODE

8925E-□□□-179 F-□□□ GZH □□□

① ② ③ ④ ⑤ ⑥ ⑦

①	【Type】Receptacle, With strain relief **8925E** : With locking ejectors
②	【No. of contacts】 **020** : 20pin **030** : 30pin **040** : 40pin **050** : 50pin **060** : 60pin **068** : 68pin **080** : 80pin **100** : 100pin
③	【Contact name】 **179**
④	【RoHS】 **F** : RoHS Compliant
⑤	【Cable length (cm)】 **L_1** : Dimension (Example: 013=13cm)
⑥	【Wiring code】 **GZH**
⑦	【Cable length(cm)】 **L_2** : Dimension (Example: 013=13cm)

▶Daisy chain assembly

Unit : mm(inch)

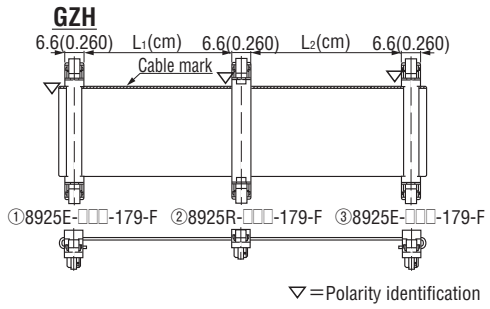

ORDER CODE

8925R-□□□-179 F-□□□ IZJ □□□

① ② ③ ④ ⑤ ⑥ ⑦

①	【Type】Receptacle **8925R** : Without strain relief, With locking ejectors
②	【No. of contacts】 **020** : 20pin **030** : 30pin **040** : 40pin **050** : 50pin **060** : 60pin **068** : 68pin **080** : 80pin **100** : 100pin
③	【Contact name】 **179**
④	【RoHS】 **F** : RoHS Compliant
⑤	【Cable length (cm)】 **L_1** : Dimension (Example: 013=13cm)
⑥	【Wiring code】 **IZJ**
⑦	【Cable length(cm)】 **L_2** : Dimension (Example: 013=13cm)

*If you are interested in the intermittent bonded or Twist&Flat cable, please contact your local KEL sales office.

▶Daisy chain assembly

Unit : mm(inch)

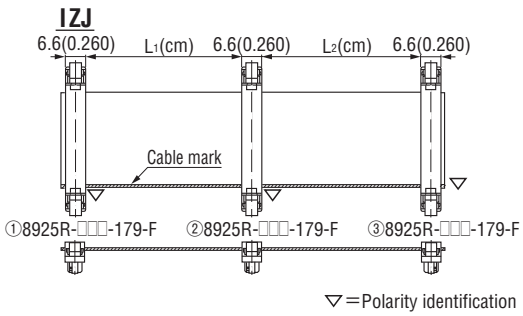

*Intermittent bonded and Twist&Flat cable have a restriction on cable length (L dimension) because they are terminated at the fused part.
*Harness end has an extra of apporoximate 1mm beyond the connector edge.

8925□／8931E SERIES PIN ASSIGNMENT (Straight, Through hole)

▶Single end assembly (Example: GO wiring)

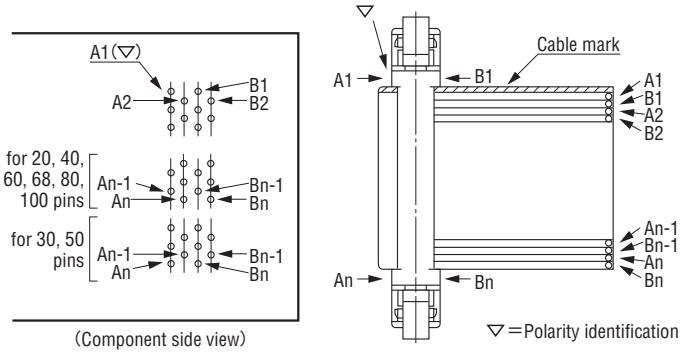

Note:
Please be careful when trimming the cable after terminating the 8925 □ Series, to protect against the flat ribbon cable that extends beyond the edge of the cable connector body touching the PCB and creating a short circuit. (When used with Right angle Plug connector)

▶Double end assembly (Example: GG wiring)

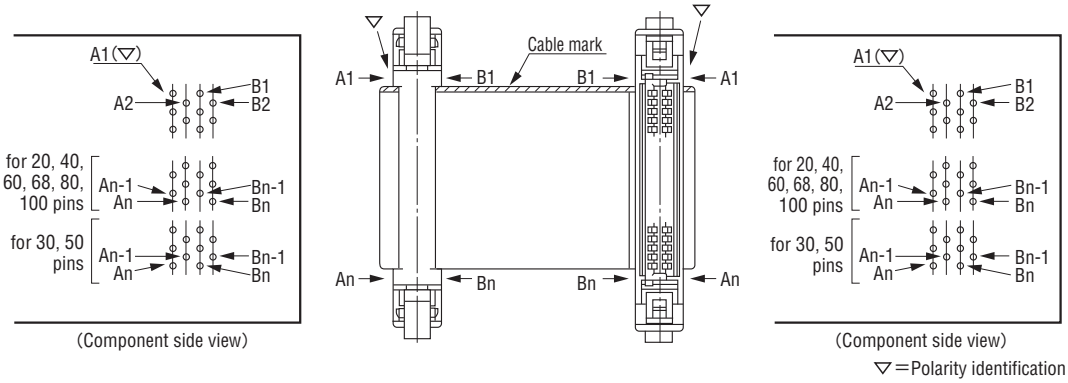

▶Double end assembly (Example: GH wiring)

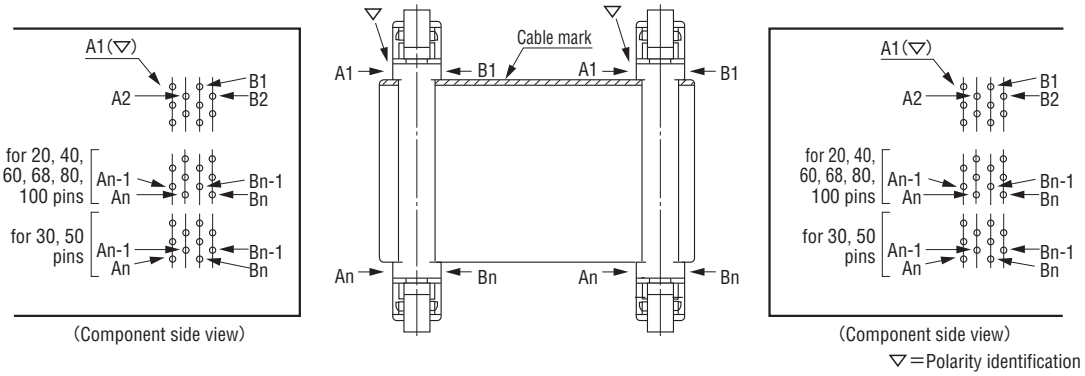

▶Daisy chain assembly (Example: GZH wiring)

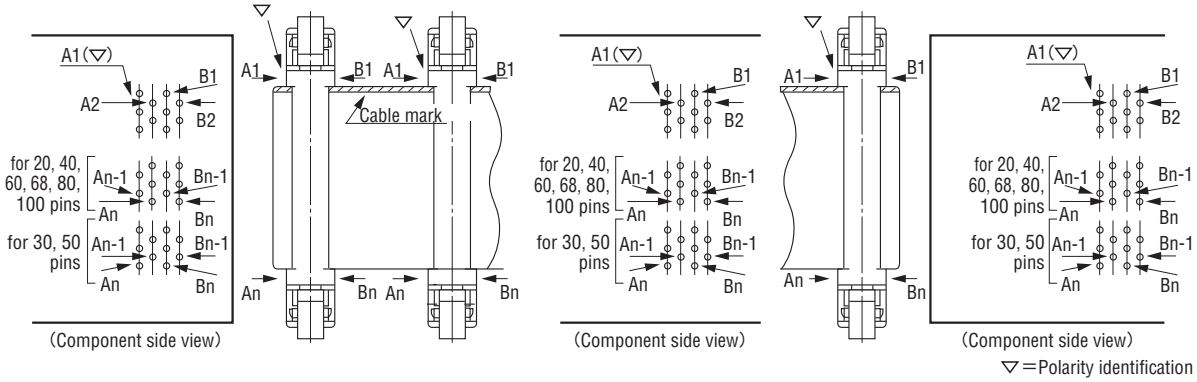

8925□／8931E SERIES PIN ASSIGNMENT (Right angle, Through hole)

▶Single end assembly (Example: GO wiring)

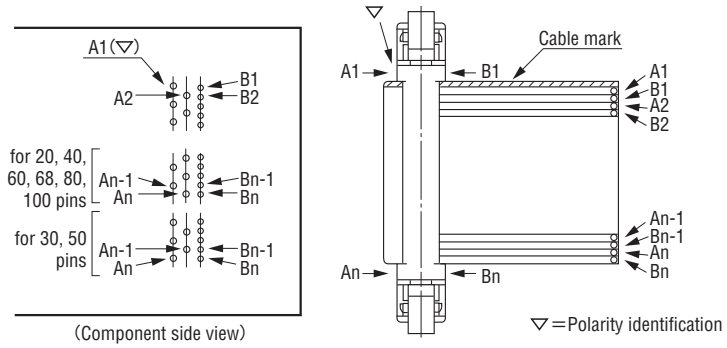

▶Double end assembly (Example: GG wiring)

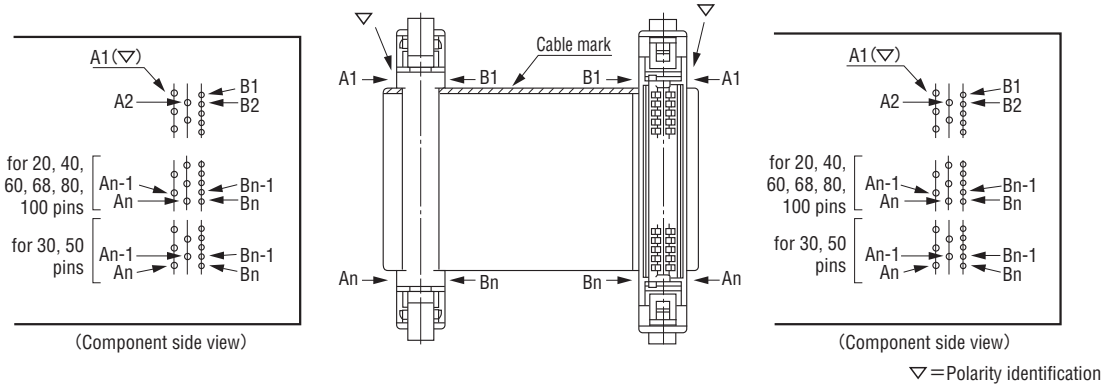

▶Double end assembly (Example: GH wiring)

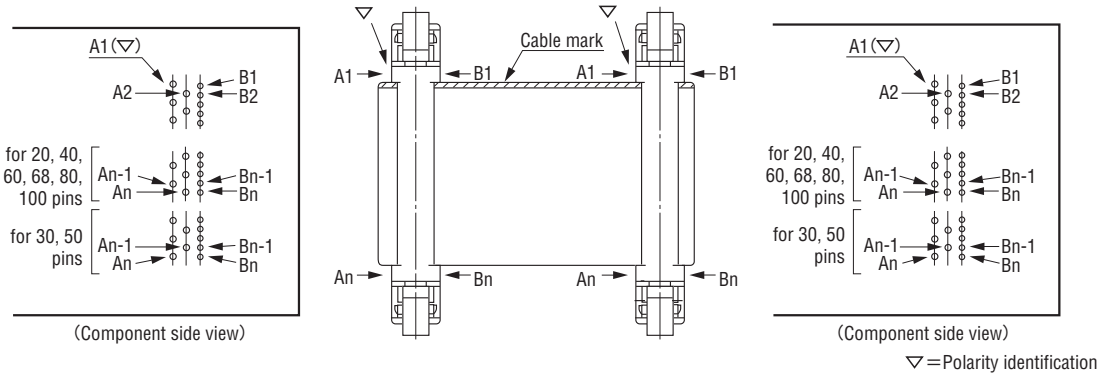

▶Daisy chain assembly (Example: GZH wiring)

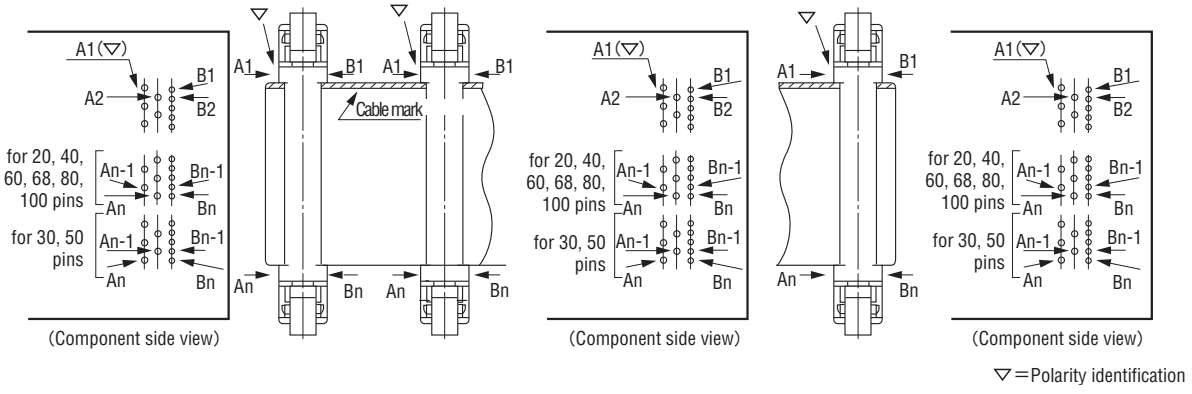

8925□／8930E SERIES　PIN ASSIGNMENT (Straight, SMT)

▶Single end assembly (Example: GO wiring)

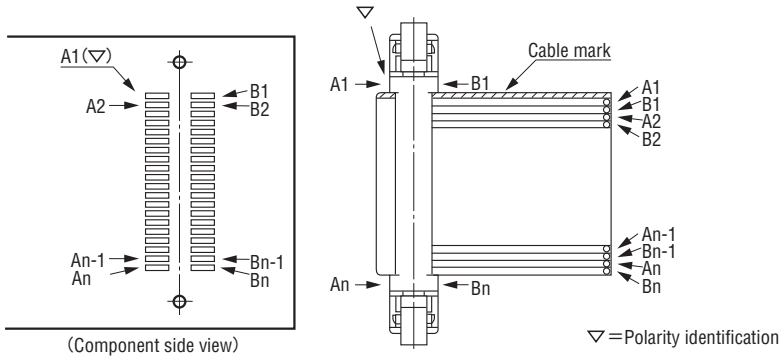

▶Double end assembly (Example: GG wiring)

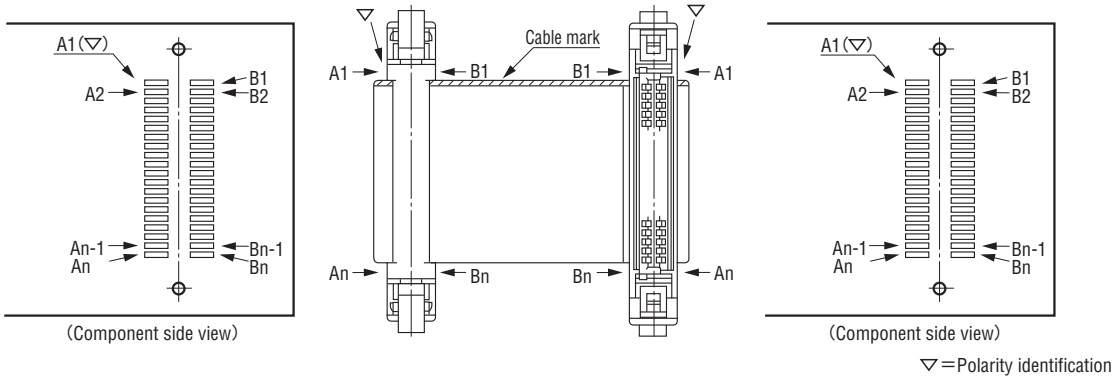

▶Double end assembly (Example: GH wiring)

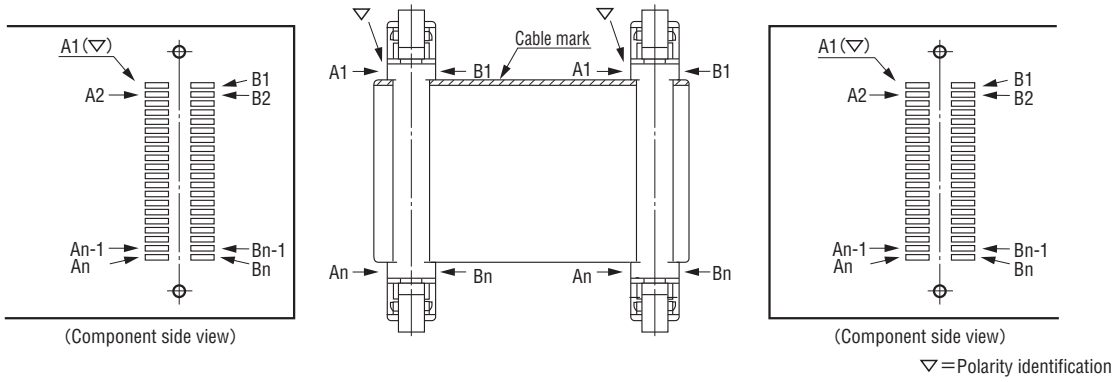

▶Daisy chain assembly (Example: GZH wiring)

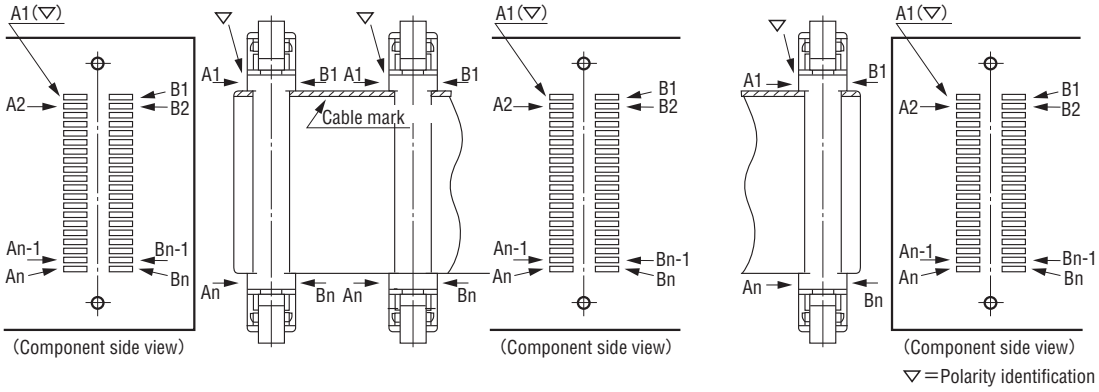

A smooth procedure from cutting of a flat cable to terminal connection to a connector can be achieved.

A hand press (HP-12), cable terminator, and termination equipment, which are designed to be user-friendly and to achieve advanced workability, can be utilized for more speedy and reliable insulation displacement connection between a flat cable and receptacle-side connector (8925□ Series).
The cable terminator and termination equipment can be easily replaced on a plate of the hand press. By attaching a relevant accessory, a series of tasks, such as those "from cutting of a cable to terminal connection to a connector" can be efficiently completed.

Hand press (HP-12)

After mounting the cable terminator or termination equipment, both cutting and terminal connection can be operated by the handle.

◆Locating fixture for HP-12

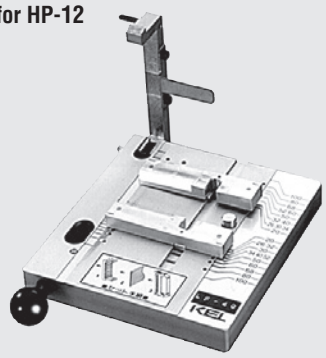

Seating platen

Termination equipment(LF-40)

It is to be mounted on the plate of a hand press to facilitate the insulation displacement connection between a cable and connector (for 8925□ Series).

* The termination equipment (LF-40) is supplied in combination with a seating platen.

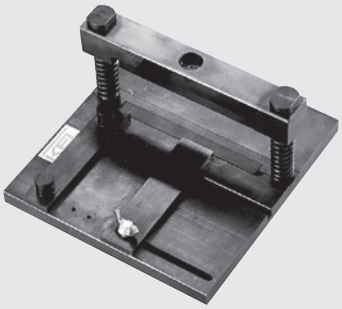

Cable terminator(CT-15)

It is to be mounted on the plate of a hand press to cut a flat cable.

* Configuration of the termination equipment and cable terminator illustrated above may be changed due to their modifications.

8825E SERIES

1.27mm PITCH CONNECTOR FOR 0.635mm PITCH FLAT CABLE

RoHS Compliant

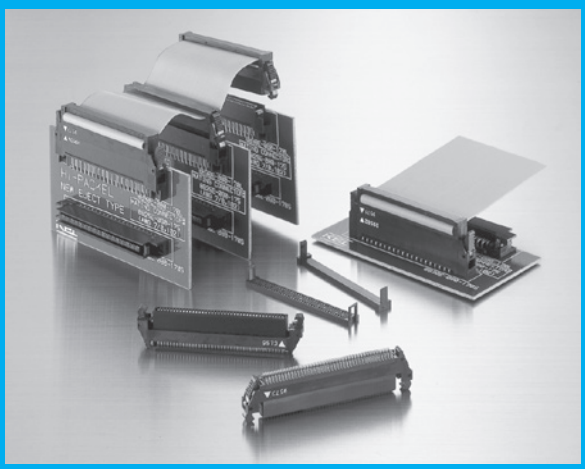

FEATURES

- With a completely-independent two-point contact system, a stable contact pressure is maintained at all times.
- Low insertion and withdrawal force.
- Equipped with the Eject-Lock mechanism, it allows one-handed insertion and release.
- The double blade-spring , sandwich mechanism prevents disconnection of cables.
- Possible to make Daisy chain assembllies.

ORDER CODE

8825□ - □□□ - 175□ - F

① ② ③ ④ ⑤

*Please order in multiples of the quantity per package.

① **【Type】** Receptacle(Cable side connector) **8825E :** With strain relief **8825R :** Without strain relief

② **【Number of contacts】** **020 :** 20pin **026 :** 26pin **030 :** 30pin **032 :** 32pin **034 :** 34pin **040 :** 40pin **050 :** 50pin **060 :** 60pin **068 :** 68pin **080 :** 80pin **100 :** 100pin

③ **【Contact name】** **175**

④ **【Gold plating of contact area】** **Omit :** 0.05 μ m min.(Standard) **D :** 0.25 μ m min.(Upon request)

⑤ **【RoHS】** **F :** RoHS Compliant

If you would like semi-customized products, please contact your local KEL sales office.

ORDER CODE

883□E - □□□ - 170□□ - F

① ② ③ ④ ⑤ ⑥

*Please order in multiples of the quantity per package.

① **【Type】** Plug(PCB side connector) **8830E :** Without hooks **8831E :** With hooks(Right angle only)

② **【Number of contacts】** **020 :** 20pin **026 :** 26pin **030 :** 30pin **032 :** 32pin **034 :** 34pin **040 :** 40pin **050 :** 50pin **060 :** 60pin **068 :** 68pin **080 :** 80pin **100 :** 100pin

③ **【Contact name】** **170**

④ **【Contact tail style】** **S :** Straight **L :** Right angle

⑤ **【Gold plating of contact area】** **Omit :** 0.05 μ m min.(Standard) **D :** 0.25 μ m min.(Upon request)

⑥ **【RoHS】** **F :** RoHS Compliant

If you would like semi-customized products, please contact your local KEL sales office.

SPECIFICATIONS

Material and plating	
Insulator material	Glass-filled Nylon 66 (UL 94V-0), Black
Contact material	Copper alloy
Contact plating	(Contact area) Gold over Nickel (Terminal area) Tin copper over Nickel
Retention clip material	Copper alloy
Retention clip plating	Tin copper over Nickel

Electrical Characteristics	
Current rating	0.5A per contact
Contact resistance	30mΩ max.
Dielectric withstanding voltage	[8825□]300V AC for 1 minute [883□E]650V AC for 1minute
Insulation resistance	[8825□]1,000MΩ min. at 250V DC [883□E]1,000MΩ min. at 500V DC
Operating temperature	-55°C to +85°C
Recommended cable	#30 AWG (7/0.102), 0.635mm (25mil) pitch, Flat ribbon cable

Easy to use Locking Ejector System

The 8825E Series Locking Ejector System is a reversal of the MIL-STD design (KEL 6200 Series), the locking ejectors are integral to the cable connector. The ejectors are automatically locked by insertion into Plug connector like the MIL-STD design.
The latches remain within the connector outline to reduce the requirements for board space, are unlocked by applying inward pressure and can be operated with only one hand unlike the older design. Also, the 8830E Series can be used with the 8800 Series for board-to-board interconnects because it does not have latches to interfere with mating. This design offers advantages for uses in today's high density electronic equipment.

Daisy Chain Assemblies

The 8825E Series terminates to a single 0.635mm (25 mil) pitch flat ribbon cable. The ability to daisy chain the connectors increases the options available to the system designer.

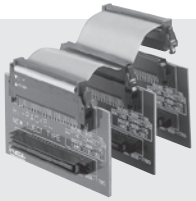

Product Concept and Features

Highly reliable and original termination form

The terminating process of 8825□ series starts with the flat cable of 0.635mm pitch placed between Covers #1 and #2 which aligns and prevents any deviation between the cable and connector.
The contacts are held in position by the insulator body.
The tips of the contact forks with guide taper and latch are sharp and break through the cable sheath to provide a gas tight termination.
The contact rib which is purposely rounded creates high pressure to insure a reliable termination without damage during the termination process.
The connector can be terminated with a minimum of special tooling in a standard press as well as a press for MIL-STD type connectors.

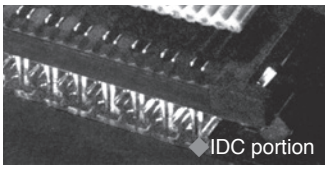

◆Exploded View

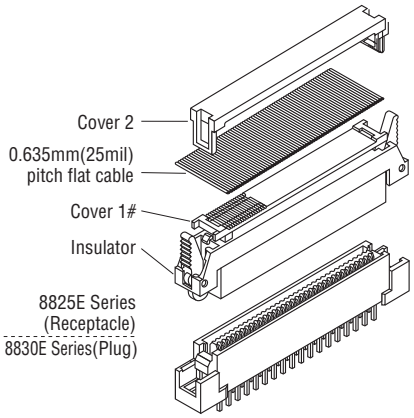

◆8825(E) Series contact

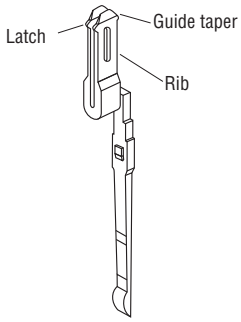

◆Insulation Displacement Process

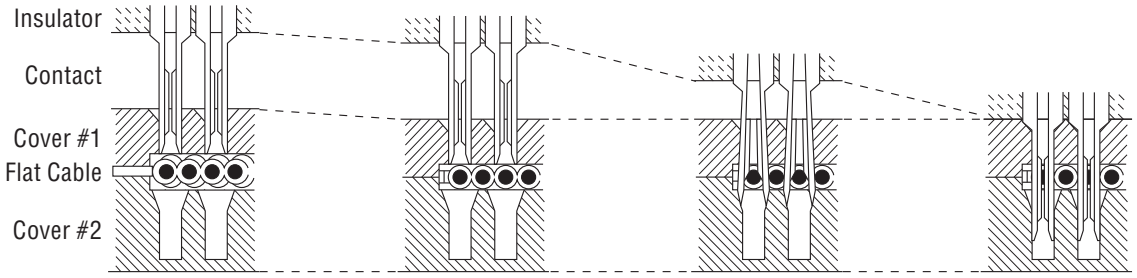

Stage1

The contact is held in position by the insulator body and the contact forks are guided by Cover #1.

➔

Stage2

As pressure is applied the cable is aligned in the grooves of Cover #1 and#2.

➔

Stage3

Cover #1 and #2 hold the cable and stabilize the contact/conductor interface.
The contact slides through Cover #1 which supports and aligns the cable throughout the termination process.

➔

Stage4

The contacts terminate the and slide into Cover #2.The contact forks are compressed by Cover #2 and form a gas tight termination.

➔ The reliability of the termination process depends on maintaining proper alignment of the cable to the connector, the contact to the conductor, and the stability of contact in the connector. The design of the 8825□ satisfies the requirements as explained above.

8825□-□□□-175□-F (Receptacle, Cable side connector)

Unit : mm(inch)

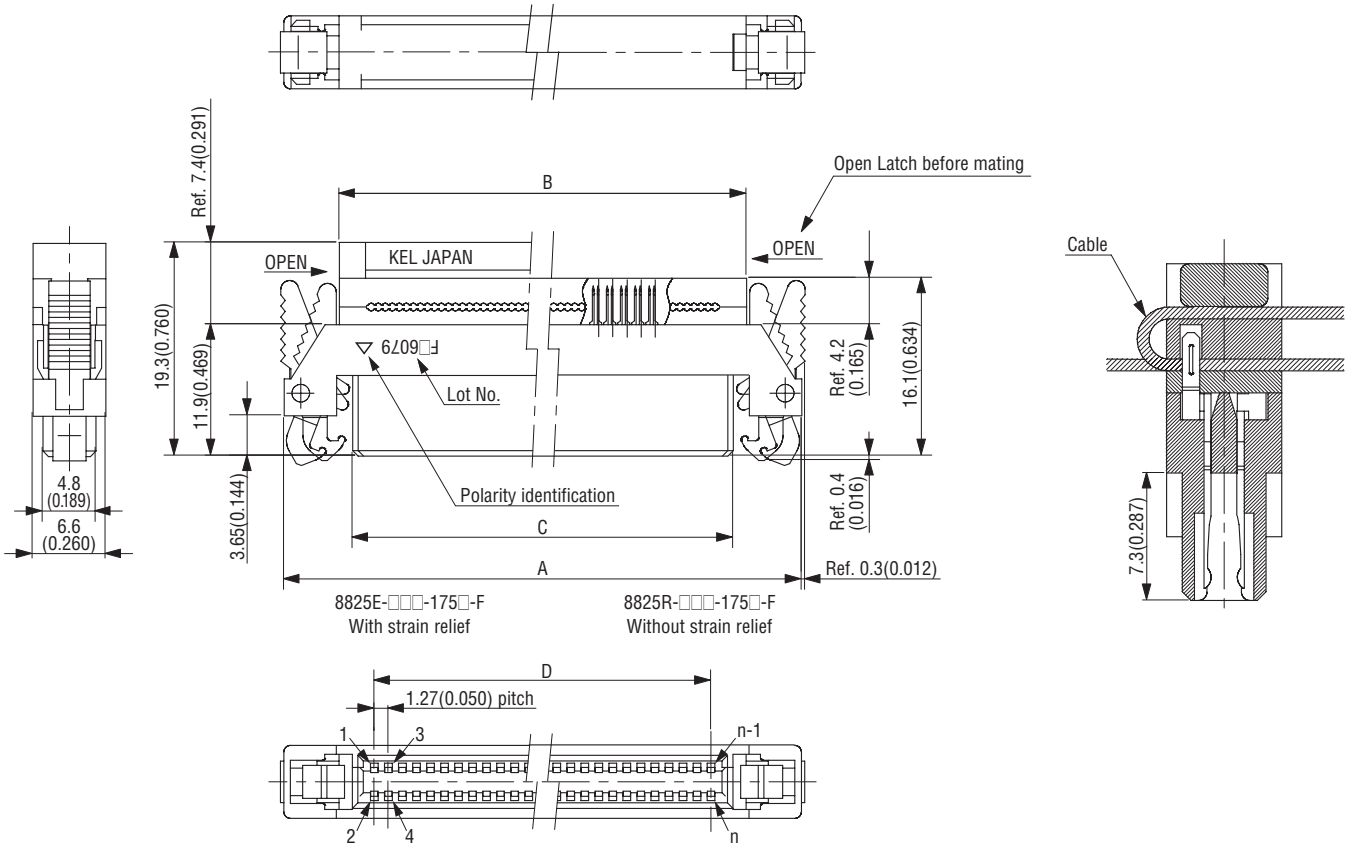

"n" is number of contacts.

Packaging style
Other

Product Table / Dimensions

No. of contacts	Part Number	A	B	C	D	Number of packaging
20	8825□-020-175□-F	27.83 (1.096)	17.83 (0.702)	15.43 (0.607)	11.43 (0.450)	80
26	8825□-026-175□-F	31.64 (1.246)	21.64 (0.852)	19.24 (0.757)	15.24 (0.600)	80
30	8825□-030-175□-F	34.18 (1.346)	24.18 (0.952)	21.78 (0.857)	17.78 (0.700)	80
32	8825□-032-175□-F	35.45 (1.396)	25.45 (1.002)	23.05 (0.907)	19.05 (0.750)	80
34	8825□-034-175□-F	36.72 (1.446)	26.72 (1.052)	24.32 (0.957)	20.32 (0.800)	80
40	8825□-040-175□-F	40.53 (1.596)	30.53 (1.202)	28.13 (1.107)	24.13 (0.950)	60
50	8825□-050-175□-F	46.88 (1.846)	36.88 (1.452)	34.48 (1.357)	30.48 (1.200)	50
60	8825□-060-175□-F	53.23 (2.096)	43.23 (1.702)	40.83 (1.607)	36.83 (1.450)	50
68	8825□-068-175□-F	58.31 (2.296)	48.31 (1.902)	45.91 (1.807)	41.91 (1.650)	50
80	8825□-080-175□-F	65.93 (2.596)	55.93 (2.202)	53.53 (2.107)	49.53 (1.950)	50
100	8825□-100-175□-F	78.63 (3.096)	68.63 (2.702)	66.23 (2.607)	62.23 (2.450)	50

8830E-□□□-170S□-F (Plug, PCB side connector, Straight)

Unit : mm(inch)

Printed Circuit Board Layout (Component Side View)

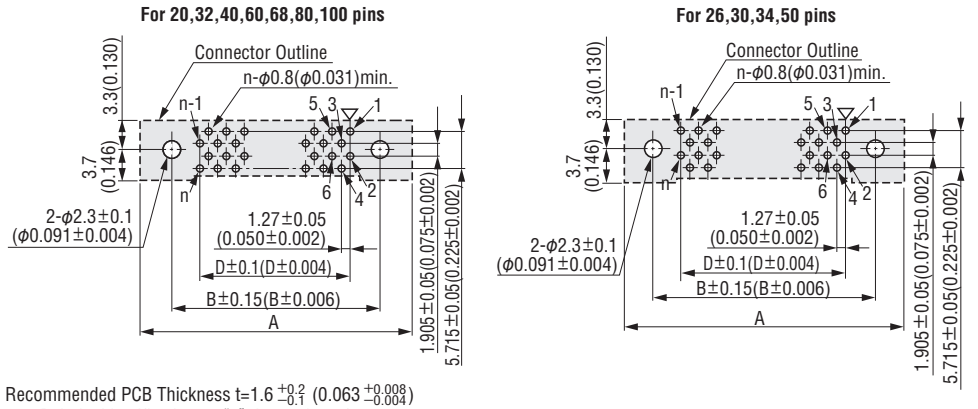

Recommended PCB Thickness t=1.6 $^{+0.2}_{-0.1}$ (0.063 $^{+0.008}_{-0.004}$)

▽=Polarity identification "n" is number of contacts.

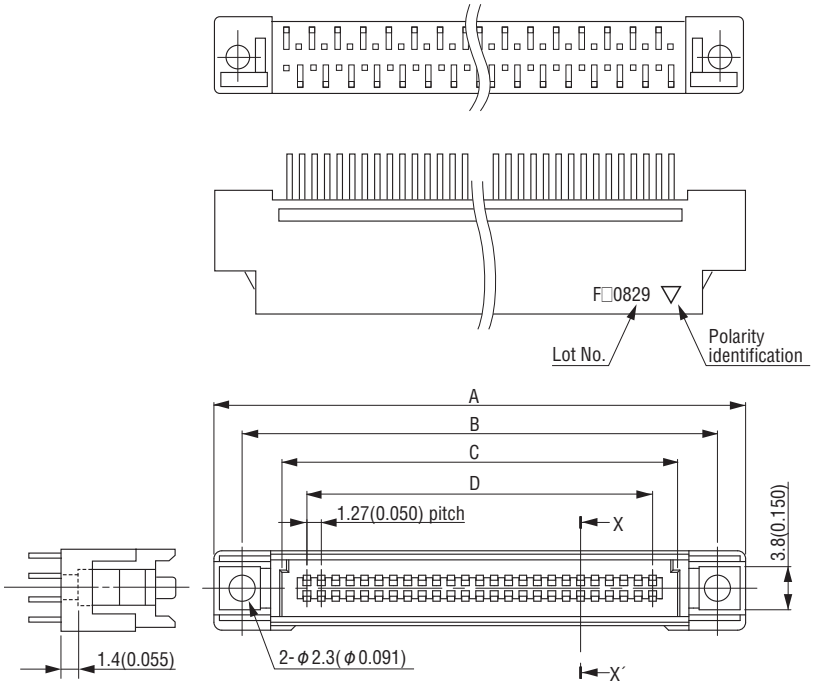

X-X′Cross Section

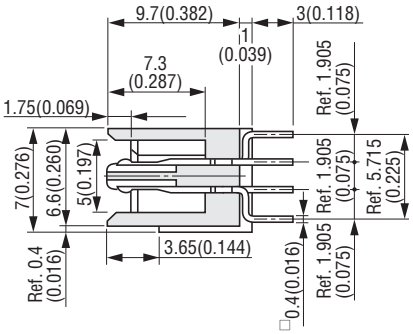

Packaging style
Pipe

Product Table / Dimensions

No. of contacts	Part Number	A	B	C	D	Number of packaging
20	8830E-020-170S□-F	27.83 (1.096)	22.86 (0.900)	15.83 (0.623)	11.43 (0.450)	18
26	8830E-026-170S□-F	31.64 (1.246)	26.67 (1.050)	19.64 (0.773)	15.24 (0.600)	16
30	8830E-030-170S□-F	34.18 (1.346)	29.21 (1.150)	22.18 (0.873)	17.78 (0.700)	14
32	8830E-032-170S□-F	35.45 (1.396)	30.48 (1.200)	23.45 (0.923)	19.05 (0.750)	14
34	8830E-034-170S□-F	36.72 (1.446)	31.75 (1.250)	24.72 (0.973)	20.32 (0.800)	13
40	8830E-040-170S□-F	40.53 (1.596)	35.56 (1.400)	28.53 (1.123)	24.13 (0.950)	12
50	8830E-050-170S□-F	46.88 (1.846)	41.91 (1.650)	34.88 (1.373)	30.48 (1.200)	10
60	8830E-060-170S□-F	53.23 (2.096)	48.26 (1.900)	41.23 (1.623)	36.83 (1.450)	9
68	8830E-068-170S□-F	58.31 (2.296)	53.34 (2.100)	46.31 (1.823)	41.91 (1.650)	8
80	8830E-080-170S□-F	65.93 (2.596)	60.96 (2.400)	53.93 (2.123)	49.53 (1.950)	7
100	8830E-100-170S□-F	78.63 (3.096)	73.66 (2.900)	66.63 (2.623)	62.23 (2.450)	6

8830E/8831E-□□□-170L□-F (Plug, PCB side connector, Right angle)

Unit : mm(inch)

Printed Circuit Board Layout (Component Side View)

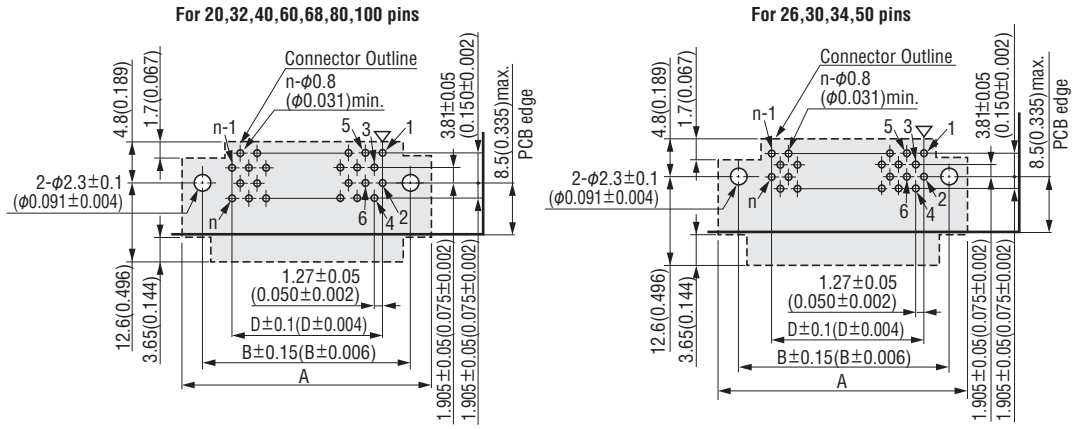

Recommended PCB Thickness t=1.6 $^{+0.2}_{-0.1}$ (0.063 $^{+0.008}_{-0.004}$)

▽=Polarity identification "n" is number of contacts.

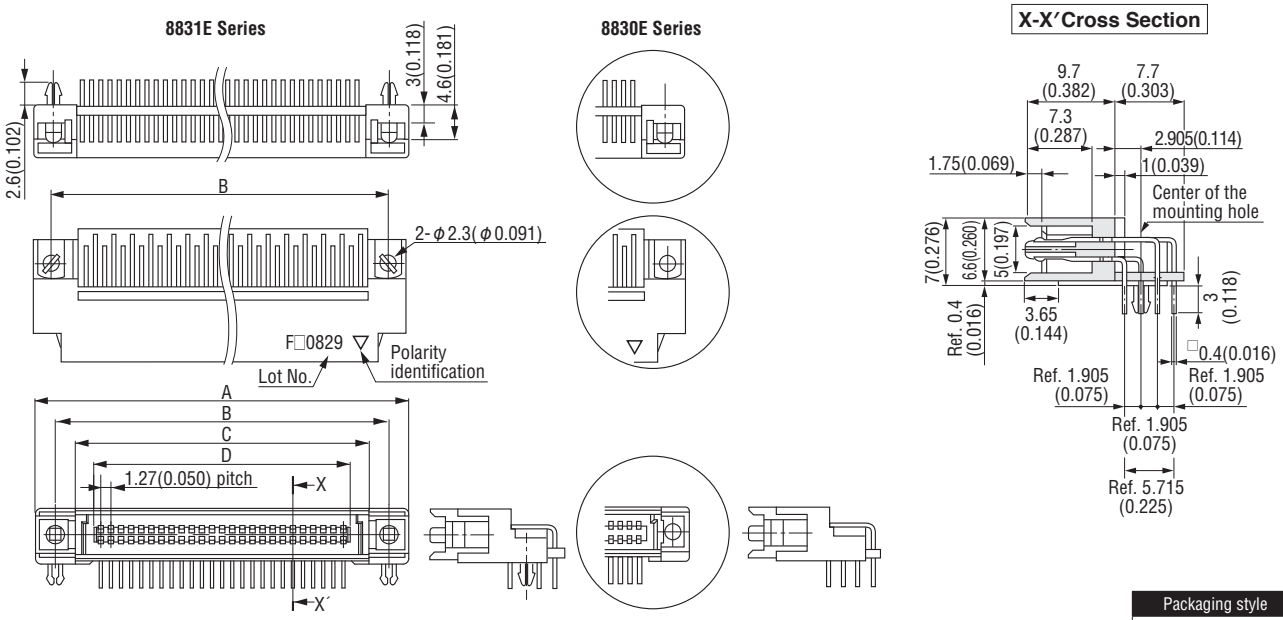

Packaging style
Pipe

Product Table / Dimensions

No. of contacts	Part Number	A	B	C	D	Number of packaging
20	8830E/8831E-020-170L□-F	27.83 (1.096)	22.86 (0.900)	15.83 (0.623)	11.43 (0.450)	18
26	8830E/8831E-026-170L□-F	31.64 (1.246)	26.67 (1.050)	19.64 (0.773)	15.24 (0.600)	16
30	8830E/8831E-030-170L□-F	34.18 (1.346)	29.21 (1.150)	22.18 (0.873)	17.78 (0.700)	14
32	8830E/8831E-032-170L□-F	35.45 (1.396)	30.48 (1.200)	23.45 (0.923)	19.05 (0.750)	14
34	8830E/8831E-034-170L□-F	36.72 (1.446)	31.75 (1.250)	24.72 (0.973)	20.32 (0.800)	13
40	8830E/8831E-040-170L□-F	40.53 (1.596)	35.56 (1.400)	28.53 (1.123)	24.13 (0.950)	12
50	8830E/8831E-050-170L□-F	46.88 (1.846)	41.91 (1.650)	34.88 (1.373)	30.48 (1.200)	10
60	8830E/8831E-060-170L□-F	53.23 (2.096)	48.26 (1.900)	41.23 (1.623)	36.83 (1.450)	9
68	8830E/8831E-068-170L□-F	58.31 (2.296)	53.34 (2.100)	46.31 (1.823)	41.91 (1.650)	8
80	8830E/8831E-080-170L□-F	65.93 (2.596)	60.96 (2.400)	53.93 (2.123)	49.53 (1.950)	7
100	8830E/8831E-100-170L□-F	78.63 (3.096)	73.66 (2.900)	66.63 (2.623)	62.23 (2.450)	6

CABLE ASSEMBLY

ORDER CODE

8825E-□□□-175□F-□□□□-□□

① ② ③ ④ ⑤ ⑥ ⑦ ⑧

①	【Type】 8825E : Receptacle (Cable side connector), With strain relief
②	【No. of contacts】 020 : 20pin 026 : 26pin 030 : 30pin 032 : 32pin 034 : 34pin 040 : 40pin 050 : 50pin 060 : 60pin 068 : 68pin 080 : 80pin 100 : 100pin
③	【Contact name】 175
④	【Plating of contact area】 Omit : Au 0.05 μ m(Standard) D : Au 0.25 μ m(Upon request)
⑤	【RoHS】 F : RoHS Compliant
⑥	【Cable length (cm)】 L : Dimension (Example: 013=13cm)
⑦	【Cable type】 Omit : Flat cable S : Intermittent bonded cable T : Twist&Flat cable
⑧	【Wiring code】 GG、GH、HH、GO、HO

*If you are interested in the intermittent bonded or Twist&Flat cable, please contact your local KEL sales office.
*If you would like semi-customized products, please contact your local KEL sales office.

ORDER CODE

8825R-□□□-175□F-□□□□-□□

① ② ③ ④ ⑤ ⑥ ⑦ ⑧

①	【Type】 8825R : Receptacle (Cable side connector), Without strain relief
②	【No. of contacts】 020 : 20pin 026 : 26pin 030 : 30pin 032 : 32pin 034 : 34pin 040 : 40pin 050 : 50pin 060 : 60pin 068 : 68pin 080 : 80pin 100 : 100pin
③	【Contact name】 175
④	【Plating of contact area】 Omit : Au 0.05 μ m(Standard) D : Au 0.25 μ m(Upon request)
⑤	【RoHS】 F : RoHS Compliant
⑥	【Cable length (cm)】 L : Dimension (Example: 013=13cm)
⑦	【Cable type】 Omit : Flat cable S : Intermittent bonded cable T : Twist&Flat cable
⑧	【Wiring code】 II、IJ、JJ、IO、JO

*If you are interested in the intermittent bonded or Twist&Flat cable, please contact your local KEL sales office.
*If you would like semi-customized products, please contact your local KEL sales office.

▶8825E-8825E Cable assemblies

Unit : mm(inch)

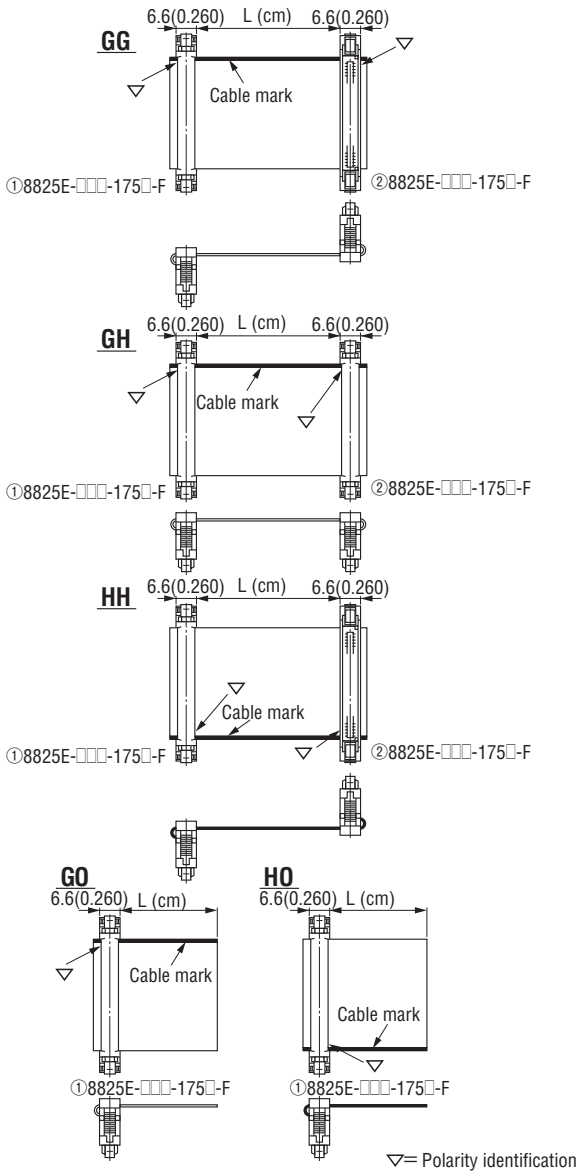

▶8825R-8825R Cable assemblies

Unit : mm(inch)

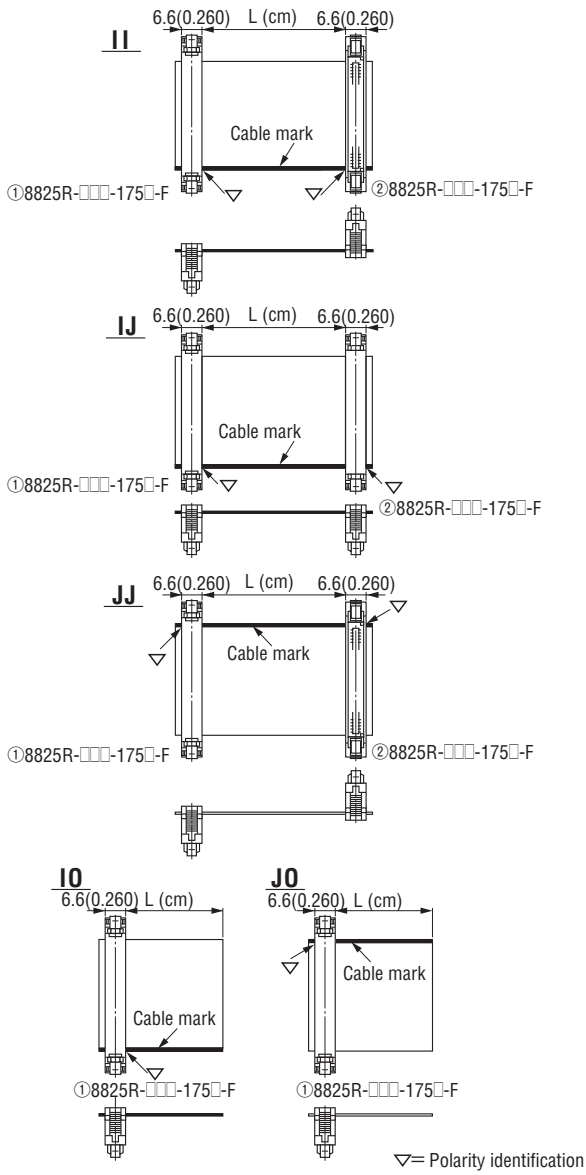

* Intermittent bonded and Twist&Flat cable have a restriction on cable length (L dimension) because they are terminated at the fused part.
* For GO, HO, IO and JO codes, orders are accepted in even quantities. * Harness end has an extra cable of approximate 1mm beyond the connector edge.

ORDER CODE

8825E-□□□-175□F-□□□□-□□

① ② ③ ④⑤ ⑥ ⑦ ⑧

①	【Type】8825E : Receptacle (Cable side connector), With strain relief
②	【No. of contacts】020 : 20pin 026 : 26pin 030 : 30pin 032 : 32pin 034 : 34pin 040 : 40pin 050 : 50pin 060 : 60pin 068 : 68pin 080 : 80pin 100 : 100pin
③	【Contact name】175
④	【Plating of contact area】 Omit : Au 0.05 μ m(Standard) D : Au 0.25 μ m(Upon request)
⑤	【RoHS】F : RoHS Compliant
⑥	【Cable length (cm)】L : Dimension (Example: 013=13cm)
⑦	【Cable type】Omit:Flat cable S:Intermittent bonded cable T:Twist&Flat cable
⑧	【Wiring code】GI、GJ、HI、HJ

*If you are interested in the intermittent bonded or Twist&Flat cable, please contact your local KEL sales office.
*If you would like semi-customized products, please contact your local KEL sales office.

ORDER CODE

8825E-□□□-175□F□□□GZH□□□

① ② ③ ④⑤ ⑥ ⑦ ⑧

①	【Type】8825E : Receptacle (Cable side connector), With strain relief
②	【No. of contacts】020 : 20pin 026 : 26pin 030 : 30pin 032 : 32pin 034 : 34pin 040 : 40pin 050 : 50pin 060 : 60pin 068 : 68pin 080 : 80pin 100 : 100pin
③	【Plating of contact area】 Omit : Au 0.05 μ m(Standard) D : Au 0.25 μ m(Upon request)
④	【Contact name】175
⑤	【RoHS】F : RoHS Compliant
⑥	【Cable length (cm)】L_1 : Dimension (Example: 013=13cm)
⑦	【Wiring code】GZH
⑧	【Cable length(cm)】L_2 : Dimension (Example: 008=8cm)

*If you would like semi-customized products, please contact your local KEL sales office.

▶8825E-8825R Cable assemblies

Unit : mm(inch)

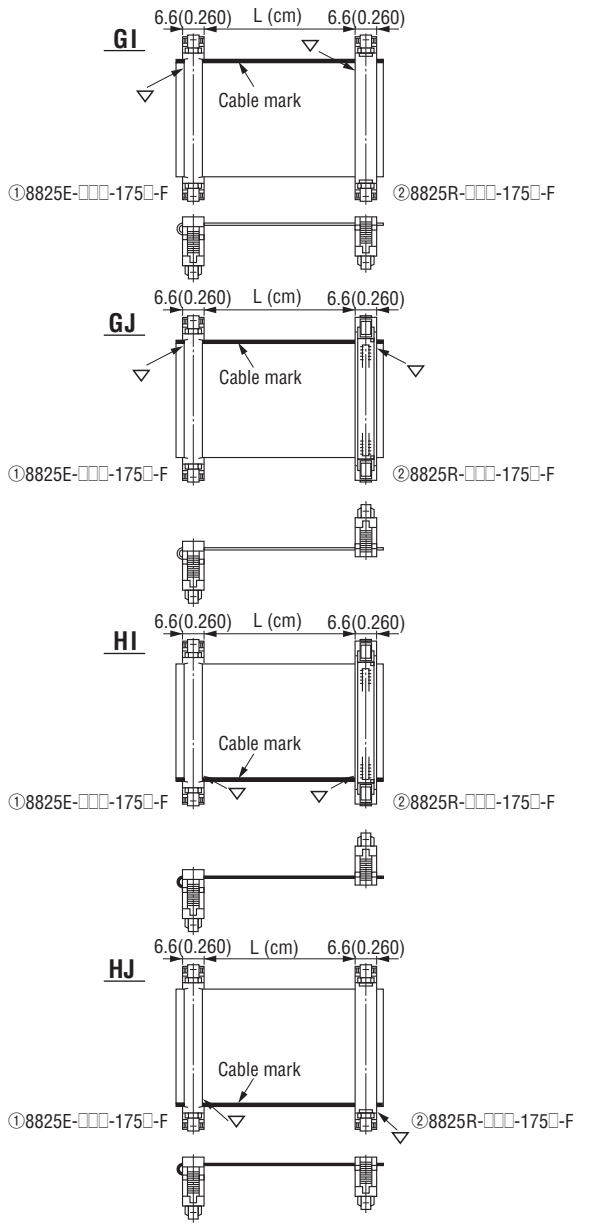

▶Daisy chain assembly

Unit : mm(inch)

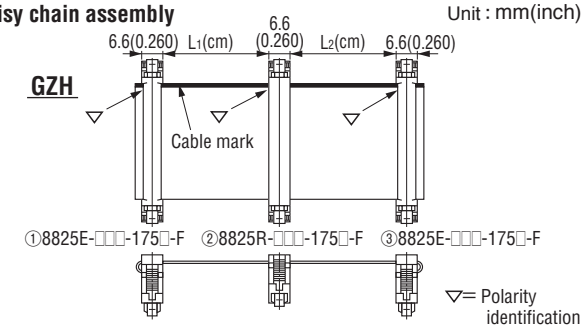

ORDER CODE

8825R-□□□-175□F□□□IZJ□□□

① ② ③ ④⑤ ⑥ ⑦ ⑧

①	【Type】8825R : Receptacle (Cable side connector), Without strain relief
②	【No. of contacts】020 : 20pin 026 : 26pin 030 : 30pin 032 : 32pin 034 : 34pin 040 : 40pin 050 : 50pin 060 : 60pin 068 : 68pin 080 : 80pin 100 : 100pin
③	【Contact name】175
④	【Plating of contact area】 Omit : Au 0.05 μ m(Standard) D : Au 0.25 μ m(Upon request)
⑤	【RoHS】F : RoHS Compliant
⑥	【Cable length (cm)】L_1 : Dimension (Example: 013=13cm)
⑦	【Wiring code】IZJ
⑧	【Cable length(cm)】L_2 : Dimension (Example: 013=13cm)

*If you are interested in the intermittent bonder or Twist&Flat cable, please contact your local KEL sales office.

▶Daisy chain assembly

Unit : mm(inch)

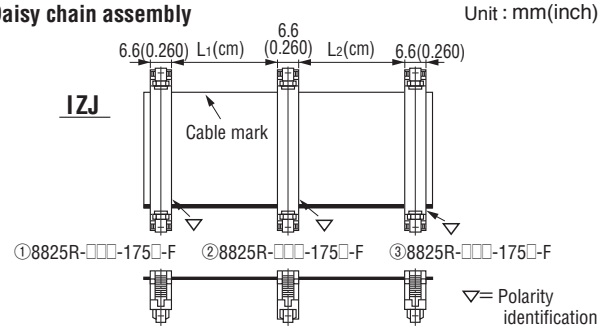

* Intermittent bonded and Twist&Flat cable have a restriction on cable length (L dimension) because they are terminated at the fused part.
* Harness end has an extra cable of approximate 1mm beyond the connector edge.

PIN ASSIGNMENT

Single end assembly (Example: GO wiring)

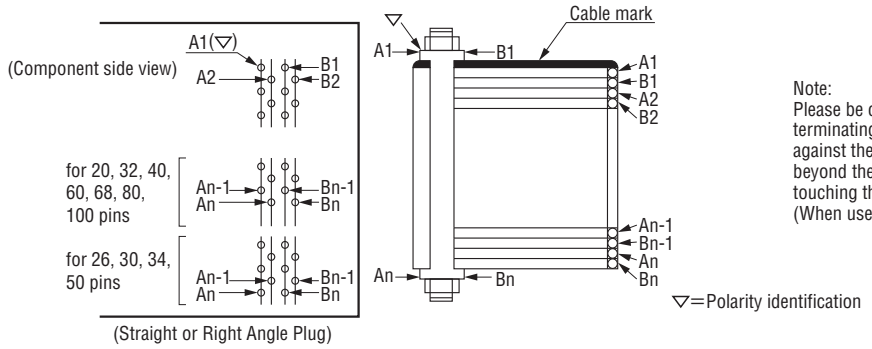

Note:
Please be careful when trimming the cable after terminating the 8825E/8825R Series, to protect against the flat ribbon cable that extends beyond the edge of the cable connector body touching the PCB and creating a short circuit.
(When used with Right angle Plug connector)

Double end assembly (Example: GH wiring)

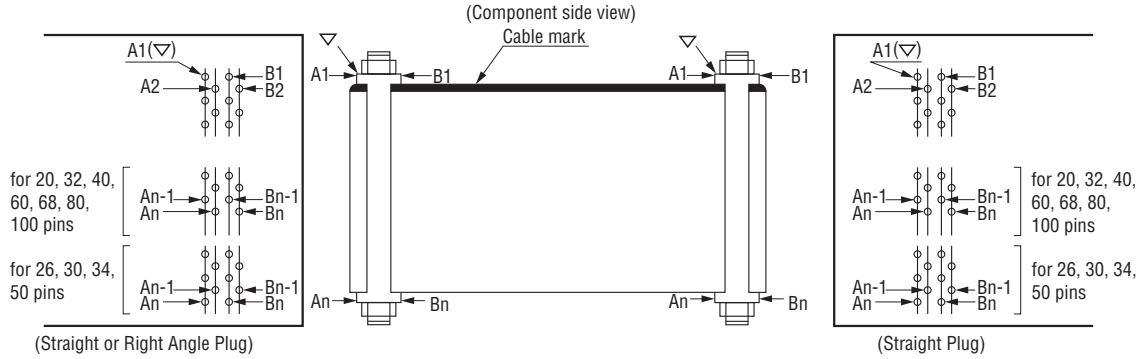

▽=Polarity identification

Daisy chain assembly (Example: GZH wiring)

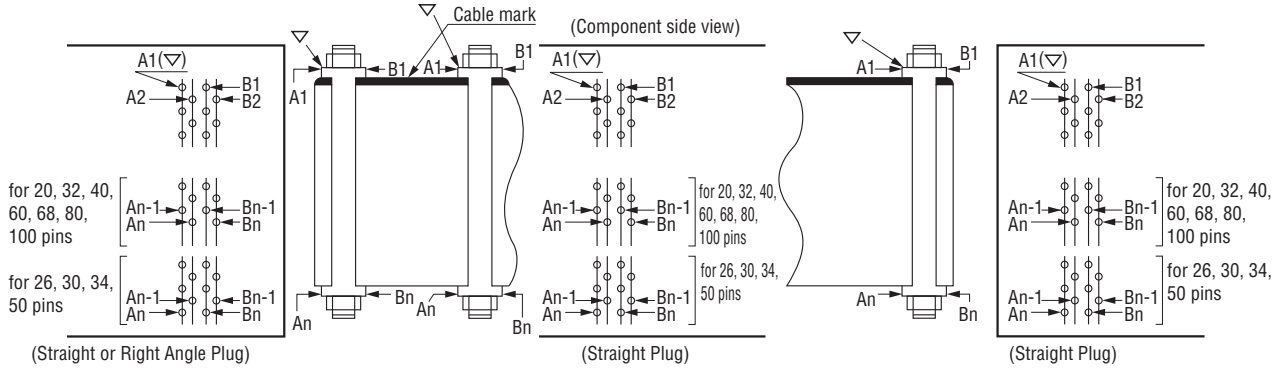

▽=Polarity identification

A smooth procedure from cutting of a flat cable to terminal connection to a connector can be achieved.

A hand press (HP-12), cable terminator, and termination equipment, which are designed to be user-friendly and to achieve advanced workability, can be utilized for more speedy and reliable insulation displacement connection between a flat cable and receptacle-side connector (8825□ Series).
The cable terminator and termination equipment can be easily replaced on a plate of the hand press. By attaching a relevant accessory, a series of tasks, such as those "from cutting of a cable to terminal connection to a connector" can be efficiently completed.

Hand press (HP-12)

After mounting the cable terminator or termination equipment, both cutting and terminal connection can be operated by the handle.

◆Locating fixture for HP-12

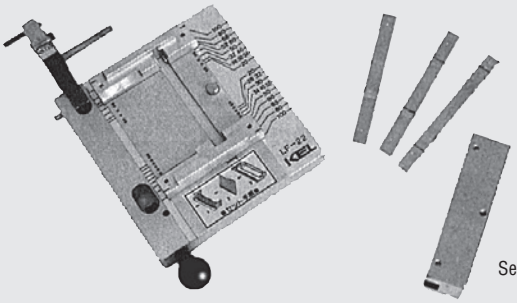

Seating platen

Termination equipment(LF-22)

It is to be mounted on the plate of a hand press to facilitate the insulation displacement connection between a cable and connector (for 8825□ Series).

* The termination equipment (LF-22) is supplied in combination with a seating platen.

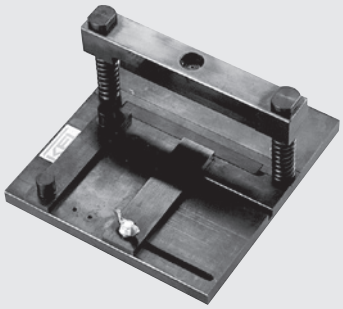

Cable terminator(CT-15)

It is to be mounted on the plate of a hand press to cut a flat cable.

* Configuration of the termination equipment and cable terminator illustrated above may be changed due to their modifications.

8822E / 8822 SERIES

RoHS Compliant

1.27mm PITCH CONNECTOR FOR 1.27mm PITCH FLAT CABLE

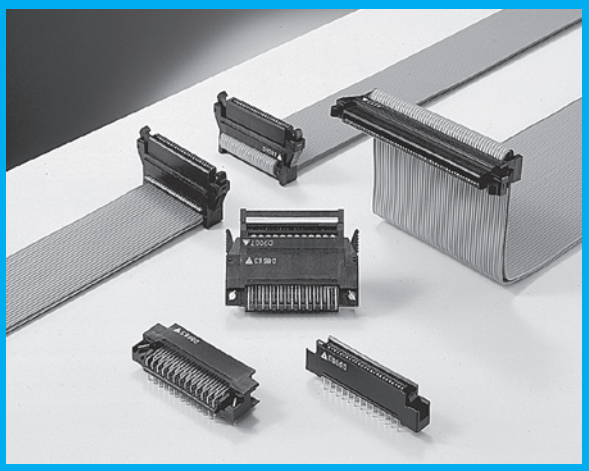

FEATURES

- With a completely-independent two-point contact system, a stable contact pressure is maintained at all times.
- Low insertion and withdrawal force.
- Can be used with MIL-STD type IDC connectors(KEL 6100, 6200, 6200S, 6230 Series for example).
- Equipped with the Eject-Lock mechanism, it allows one-handed insertion and release, and the One Touch Lock mechanism for easy handling are available.
- Wide variations in the number of contacts (13 sizes from 20 to 100 pins) are available.

ORDER CODE

8822 ☐ - ☐☐☐ - 171 ☐ - F

① ② ③ ④ ⑤

*Please order in multiples of the quantity per package.

① 【Type】 Receptacle (Cable side connector) **8822 :** One touch lock **8822E :** Eject lock

② 【Number of contacts】 **020 :** 20pin **026 :** 26pin **030 :** 30pin **032 :** 32pin **034 :** 34pin **036 :** 36pin **040 :** 40pin **050 :** 50pin **052 :** 52pin **060 :** 60pin **068 :** 68pin **080 :** 80pin **100 :** 100pin
In 8822 series (One Touch Lock type), 36, 80, and 100 pin connectors are not available.

③ 【Contact name】 **171**

④ 【Plating of contact area】 **Omit :** Au 0.05 μ m (Standard) **D :** Au 0.25 μ m (Upon request)

⑤ 【RoHS】 **F :** RoHS compliant

If you would like semi-customized products, please contact your local KEL sales office.

ORDER CODE

883 ☐☐ - ☐☐☐ - 170 ☐ ☐ - F

① ② ③ ④ ⑤ ⑥

*Please order in multiples of the quantity per package.

① 【Type】 Plug (PCB side connector) **8830 :** For 8822 series, without hooks **8831 :** For 8822 series, with hooks (L type only)
8830E : For 8822E series, without hooks **8831E :** For 8822E series, with hooks (L type only)

② 【Number of contacts】 **020 :** 20pin **026 :** 26pin **030 :** 30pin **032 :** 32pin **034 :** 34pin **036 :** 36pin **040 :** 40pin **050 :** 50pin **052 :** 52pin **060 :** 60pin **068 :** 68pin **080 :** 80pin **100 :** 100 pin
In 8830/31 series (One Touch Lock type), 36, 80, and 100 pin connectors are not available.

③ 【Contact name】 **170**

④ 【Contact tail style】 **S :** Straight **L :** Right angle

⑤ 【Plating of contact area】 **Omit :** Au 0.05 μ m (Standard) **D :** Au 0.25 μ m (Upon request)

⑥ 【RoHS】 **F :** RoHS compliant

If you would like semi-customized products, please contact your local KEL sales office.

SPECIFICATIONS

Material and plating	
Insulator material	Glass-filled Nylon 66 (UL94V-0),Black
Contact material	Copper alloy
Contact plating	(Contact area) Gold over Nickel (Terminal area) Tin copper over Nickel
Retention clip material	Copper alloy
Retention clip plating	Tin copper over Nickel

Electrical Characteristics	
Current rating	0.5A per contact
Contact resistance	30mΩ max.
Dielectric withstanding voltage	650V AC for 1 minute
Insulation resistance	1,000MΩ min. at 500V DC
Operating temperature	-55°C to +85°C
Recommended cable	#28 AWG(7/0.127),1.27mm(50mil)pitch, Flat ribbon cable

8822E series Eject Lock mechanism

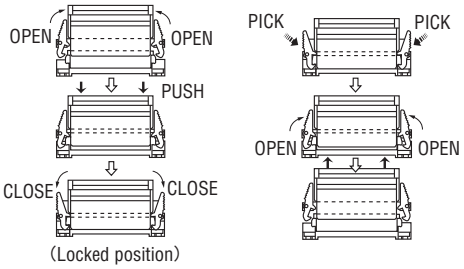

The Eject-Lock of 8822E Series is an innovative mechanism that allows one-handed insertion and release. After inserting the connector, for mating, to an unlocked (OPEN state) receptacle, the mechanism automatically locks the connector (CLOSE state). Then, pressing the ejectors on both sides releases the connector.

8822 series One touch lock mechanism

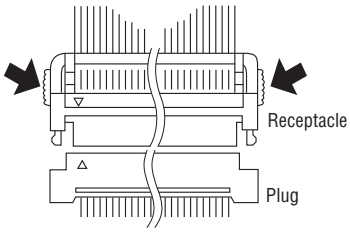

The One Touch Lock of 8822 Series is a mechanism that allows insertion/release of the connector with a single operation. It locks the connector by just inserting it to a receptacle for mating. Then, holding the lock springs at both ends of the receptacle with your thumb and forefinger and pressing them slightly unlocks the connector, allowing it to be removed.

8822E-□□□-171□-F (Receptacle, Cable side connector, Eject lock)

Unit : mm(inch)

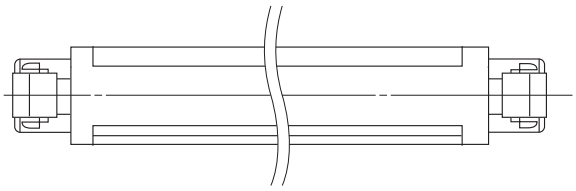

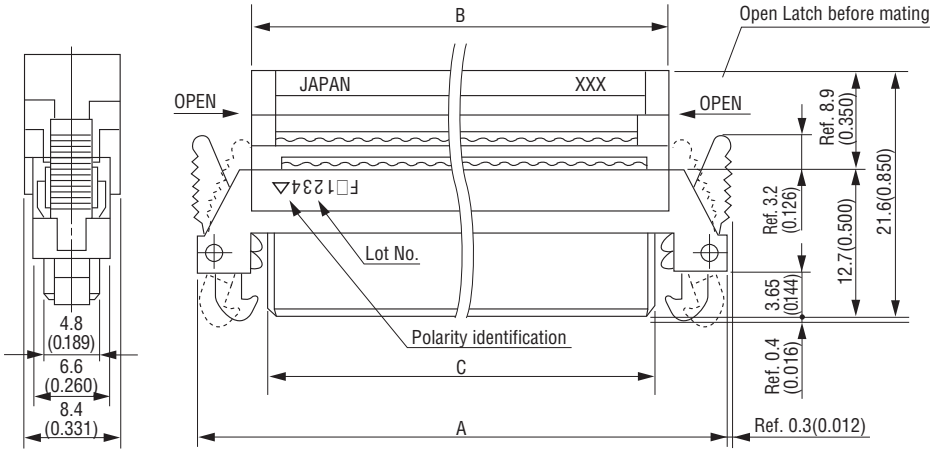

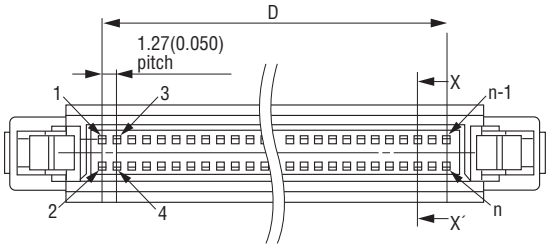

X-X′Cross Section

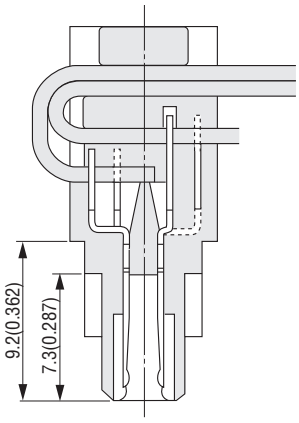

"n" is number of contacts.

Packaging style
Other

Product Table / Dimensions

No. of contacts	Part Number	A	B	C	D	Number of packaging
20	8822E-020-171□-F	27.83 (1.096)	17.83 (0.702)	15.43 (0.607)	11.43 (0.450)	80
26	8822E-026-171□-F	31.64 (1.246)	21.64 (0.852)	19.24 (0.757)	15.24 (0.600)	80
30	8822E-030-171□-F	34.18 (1.346)	24.18 (0.952)	21.78 (0.857)	17.78 (0.700)	80
32	8822E-032-171□-F	35.45 (1.396)	25.45 (1.002)	23.05 (0.907)	19.05 (0.750)	80
34	8822E-034-171□-F	36.72 (1.446)	26.72 (1.052)	24.32 (0.957)	20.32 (0.800)	80
36	8822E-036-171□-F	37.99 (1.496)	27.99 (1.102)	25.59 (1.007)	21.59 (0.850)	60
40	8822E-040-171□-F	40.53 (1.596)	30.53 (1.202)	28.13 (1.107)	24.13 (0.950)	60
50	8822E-050-171□-F	46.88 (1.846)	36.88 (1.452)	34.48 (1.357)	30.48 (1.200)	50
52	8822E-052-171□-F	48.15 (1.896)	38.15 (1.502)	35.75 (1.407)	31.75 (1.250)	50
60	8822E-060-171□-F	53.23 (2.096)	43.23 (1.702)	40.83 (1.607)	36.83 (1.450)	50
68	8822E-068-171□-F	58.31 (2.296)	48.31 (1.902)	45.91 (1.807)	41.91 (1.650)	50
80	8822E-080-171□-F	65.93 (2.596)	55.93 (2.202)	53.53 (2.107)	49.53 (1.950)	50
100	8822E-100-171□-F	78.63 (3.096)	68.63 (2.702)	66.23 (2.607)	62.23 (2.450)	50

B.C.E. S.r.l. Via Regina Pacis, 54/c - I 41049 Sassuolo (MO) Tel.: (+39) 0536 811616 - Fax.: (+39) 0536 811500 e-mail: bce@bce.it - Website: www.bce.it

8830E-□□□-170S□-F (Plug, PCB side connector, Straight, For 8822E)

Unit : mm(inch)

Printed Circuit Board Layout (Component Side View)

For 20,32,36,40,52,60,68,80,100 pins

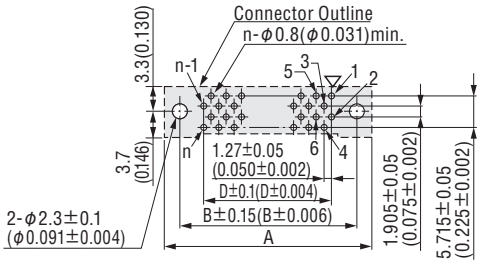

For 26,30,34,50 pins

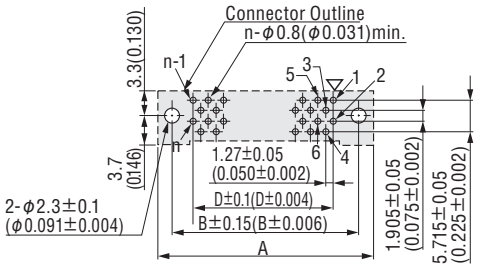

Recommended PCB Thickness $t=1.6^{+0.2}_{-0.1}$ $(0.063^{+0.008}_{-0.004})$

▽=Polarity identification "n" is number of contacts.

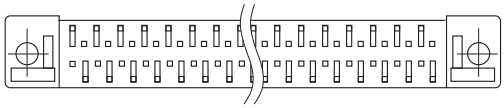

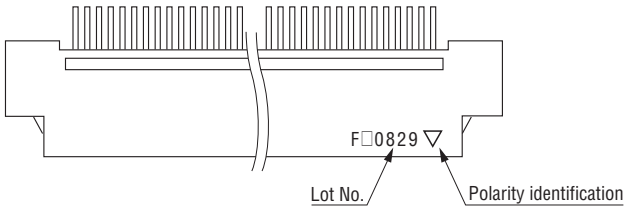

X-X′Cross Section

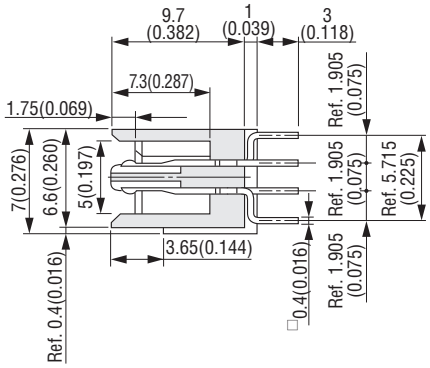

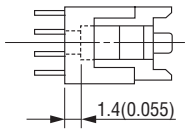

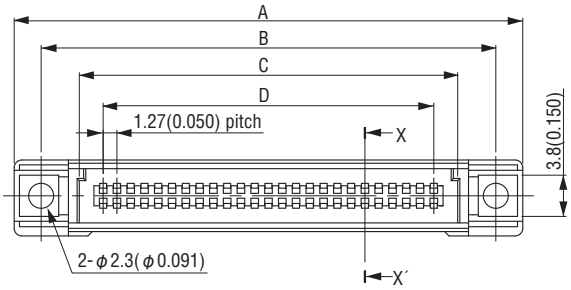

Packaging style
Pipe

Product Table / Dimensions

No. of contacts	Part Number	A	B	C	D	Number of packaging
20	8830E-020-170S□-F	27.83 (1.096)	22.86 (0.900)	15.83 (0.623)	11.43 (0.450)	18
26	8830E-026-170S□-F	31.64 (1.246)	26.67 (1.050)	19.64 (0.773)	15.24 (0.600)	16
30	8830E-030-170S□-F	34.18 (1.346)	29.21 (1.150)	22.18 (0.873)	17.78 (0.700)	14
32	8830E-032-170S□-F	35.45 (1.396)	30.48 (1.200)	23.45 (0.923)	19.05 (0.750)	14
34	8830E-034-170S□-F	36.72 (1.446)	31.75 (1.250)	24.72 (0.973)	20.32 (0.800)	13
36	8830E-036-170S□-F	37.99 (1.496)	33.02 (1.300)	25.99 (1.023)	21.59 (0.850)	13
40	8830E-040-170S□-F	40.53 (1.596)	35.56 (1.400)	28.53 (1.123)	24.13 (0.950)	12
50	8830E-050-170S□-F	46.88 (1.846)	41.91 (1.650)	34.88 (1.373)	30.48 (1.200)	10
52	8830E-052-170S□-F	48.15 (1.896)	43.18 (1.700)	36.15 (1.423)	31.75 (1.250)	10
60	8830E-060-170S□-F	53.23 (2.096)	48.26 (1.900)	41.23 (1.623)	36.83 (1.450)	9
68	8830E-068-170S□-F	58.31 (2.296)	53.34 (2.100)	46.31 (1.823)	41.91 (1.650)	8
80	8830E-080-170S□-F	65.93 (2.596)	60.96 (2.400)	53.93 (2.123)	49.53 (1.950)	7
100	8830E-100-170S□-F	78.63 (3.096)	73.66 (2.900)	66.63 (2.623)	62.23 (2.450)	6

8830E/8831E-□□□-170L□-F (Plug, PCB side connector, Right angle, For 8822E)

Unit : mm(inch)

Printed Circuit Board Layout (Component Side View)

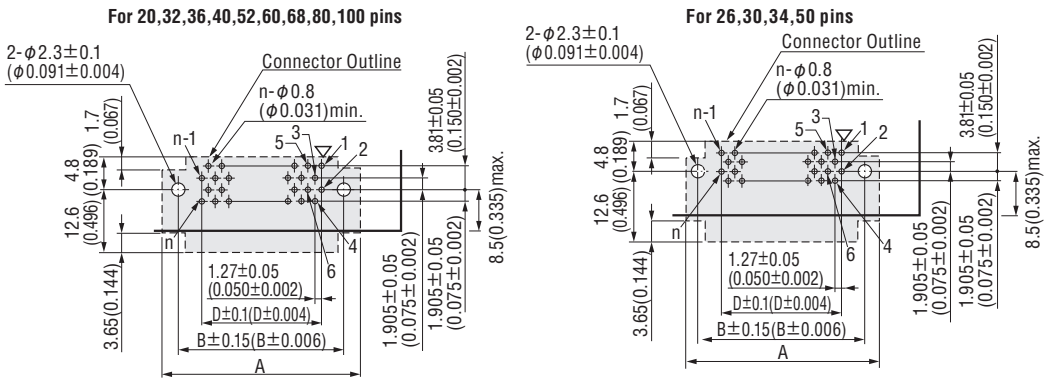

Recommended PCB Thickness $t=1.6^{+0.2}_{-0.1}$ $(0.063^{+0.008}_{-0.004})$

▽=Polarity identification "n" is number of contacts.

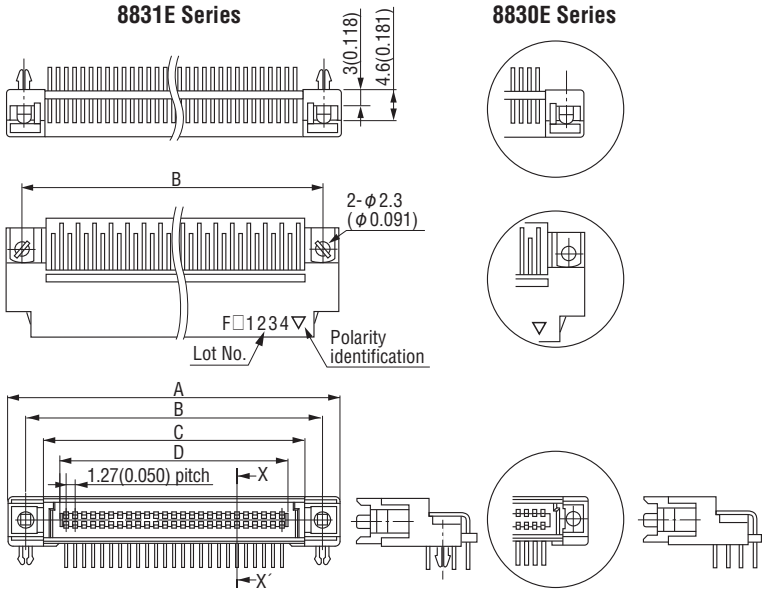

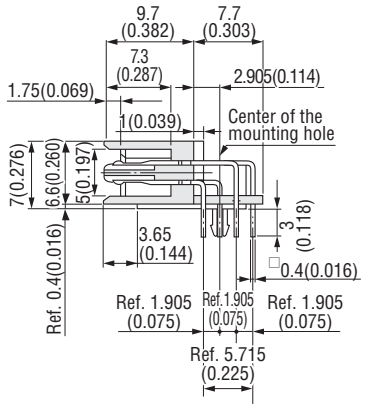

Packaging style
Pipe

Product Table / Dimensions

No. of contacts	Part Number	A	B	C	D	Number of packaging
20	8830E/8831E-020-170L□-F	27.83 (1.096)	22.86 (0.900)	15.83 (0.623)	11.43 (0.450)	18
26	8830E/8831E-026-170L□-F	31.64 (1.246)	26.67 (1.050)	19.64 (0.773)	15.24 (0.600)	16
30	8830E/8831E-030-170L□-F	34.18 (1.346)	29.21 (1.150)	22.18 (0.873)	17.78 (0.700)	14
32	8830E/8831E-032-170L□-F	35.45 (1.396)	30.48 (1.200)	23.45 (0.923)	19.05 (0.750)	14
34	8830E/8831E-034-170L□-F	36.72 (1.446)	31.75 (1.250)	24.72 (0.973)	20.32 (0.800)	13
36	8830E/8831E-036-170L□-F	37.99 (1.496)	33.02 (1.300)	25.99 (1.023)	21.59 (0.850)	13
40	8830E/8831E-040-170L□-F	40.53 (1.596)	35.56 (1.400)	28.53 (1.123)	24.13 (0.950)	12
50	8830E/8831E-050-170L□-F	46.88 (1.846)	41.91 (1.650)	34.88 (1.373)	30.48 (1.200)	10
52	8830E/8831E-052-170L□-F	48.15 (1.896)	43.18 (1.700)	36.15 (1.423)	31.75 (1.250)	10
60	8830E/8831E-060-170L□-F	53.23 (2.096)	48.26 (1.900)	41.23 (1.623)	36.83 (1.450)	9
68	8830E/8831E-068-170L□-F	58.31 (2.296)	53.34 (2.100)	46.31 (1.823)	41.91 (1.650)	8
80	8830E/8831E-080-170L□-F	65.93 (2.596)	60.96 (2.400)	53.93 (2.123)	49.53 (1.950)	7
100	8830E/8831E-100-170L□-F	78.63 (3.096)	73.66 (2.900)	66.63 (2.623)	62.23 (2.450)	6

8822-□□□-171□-F (Receptacle,Cable side connector, One touch lock)

Unit : mm(inch)

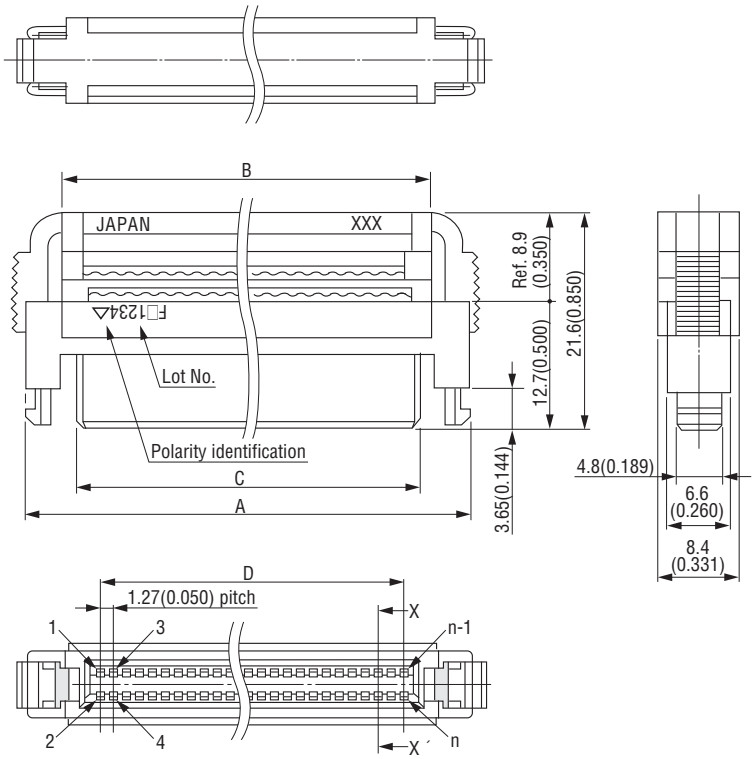

"n" is number of contacts

X-X′Cross Section

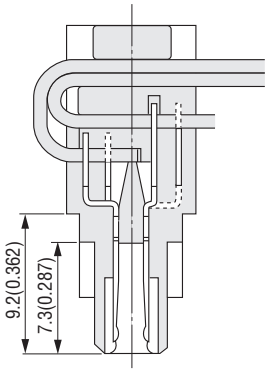

Packaging style
Other

Product Table / Dimensions

No. of contacts	Part Number	A	B	C	D	Number of packaging
20	8822-020-171□-F	25.43 (1.001)	17.83 (0.702)	15.43 (0.607)	11.43 (0.450)	80
26	8822-026-171□-F	29.24 (1.151)	21.64 (0.852)	19.24 (0.757)	15.24 (0.600)	80
30	8822-030-171□-F	31.78 (1.251)	24.18 (0.952)	21.78 (0.857)	17.78 (0.700)	80
32	8822-032-171□-F	33.05 (1.301)	25.45 (1.002)	23.05 (0.907)	19.05 (0.750)	80
34	8822-034-171□-F	34.32 (1.351)	26.72 (1.052)	24.32 (0.957)	20.32 (0.800)	80
40	8822-040-171□-F	38.13 (1.501)	30.53 (1.202)	28.13 (1.107)	24.13 (0.950)	60
50	8822-050-171□-F	44.48 (1.751)	36.88 (1.452)	34.48 (1.357)	30.48 (1.200)	50
52	8822-052-171□-F	45.75 (1.801)	38.15 (1.502)	35.75 (1.407)	31.75 (1.250)	50
60	8822-060-171□-F	50.83 (2.001)	43.23 (1.702)	40.83 (1.607)	36.83 (1.450)	50
68	8822-068-171□-F	55.91 (2.201)	48.31 (1.902)	45.91 (1.807)	41.91 (1.650)	50

8830-□□□-170S□-F (Plug,PCB side connector, Straight, For 8822)

Unit : mm(inch)

Printed Circuit Board Layout (Component Side View)

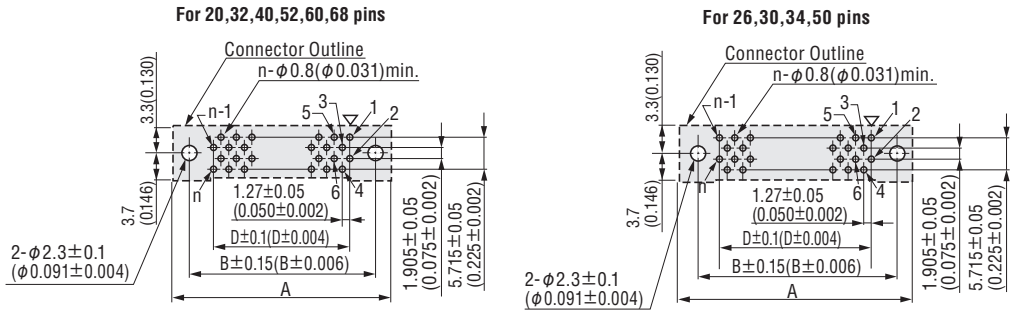

Recommended PCB Thickness t=1.6 $^{+0.2}_{-0.1}$ (0.063 $^{+0.008}_{-0.004}$)

▽=Polarity identification "n" is number of contacts.

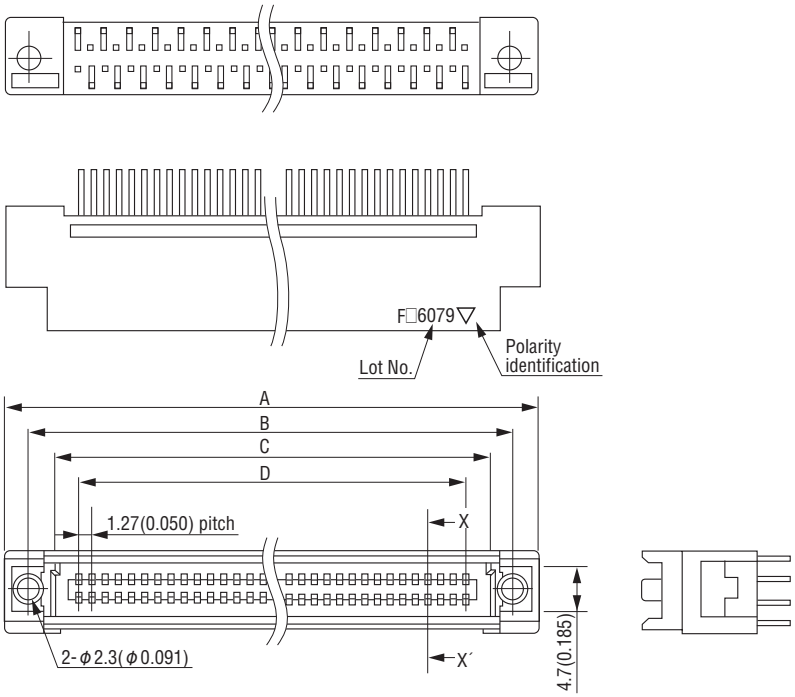

X-X′Cross Section

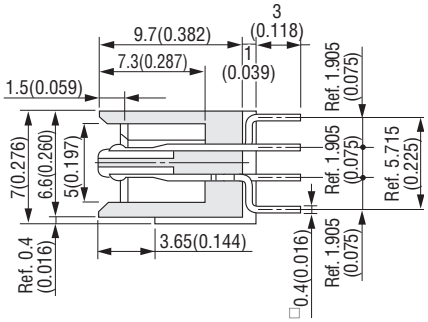

Packaging style
Pipe

Product Table / Dimensions

No. of contacts	Part Number	A	B	C	D	Number of packaging
20	8830-020-170S□-F	25.43 (1.001)	20.32 (0.800)	15.83 (0.623)	11.43 (0.450)	20
26	8830-026-170S□-F	29.24 (1.151)	24.13 (0.950)	19.64 (0.773)	15.24 (0.600)	17
30	8830-030-170S□-F	31.78 (1.251)	26.67 (1.050)	22.18 (0.873)	17.78 (0.700)	16
32	8830-032-170S□-F	33.05 (1.301)	27.94 (1.100)	23.45 (0.923)	19.05 (0.750)	15
34	8830-034-170S□-F	34.32 (1.351)	29.21 (1.150)	24.72 (0.973)	20.32 (0.800)	14
40	8830-040-170S□-F	38.13 (1.501)	33.02 (1.300)	28.53 (1.123)	24.13 (0.950)	13
50	8830-050-170S□-F	44.48 (1.751)	39.37 (1.550)	34.88 (1.373)	30.48 (1.200)	11
52	8830-052-170S□-F	45.75 (1.801)	40.64 (1.600)	36.15 (1.423)	31.75 (1.250)	11
60	8830-060-170S□-F	50.83 (2.001)	45.72 (1.800)	41.23 (1.623)	36.83 (1.450)	10
68	8830-068-170S□-F	55.91 (2.201)	50.80 (2.000)	46.31 (1.823)	41.91 (1.650)	9

8830/8831-□□□-170L□-F (Plug, PCB side connector, Right angle, For 8822)

Unit : mm(inch)

Printed Circuit Board Layout (Component Side View)

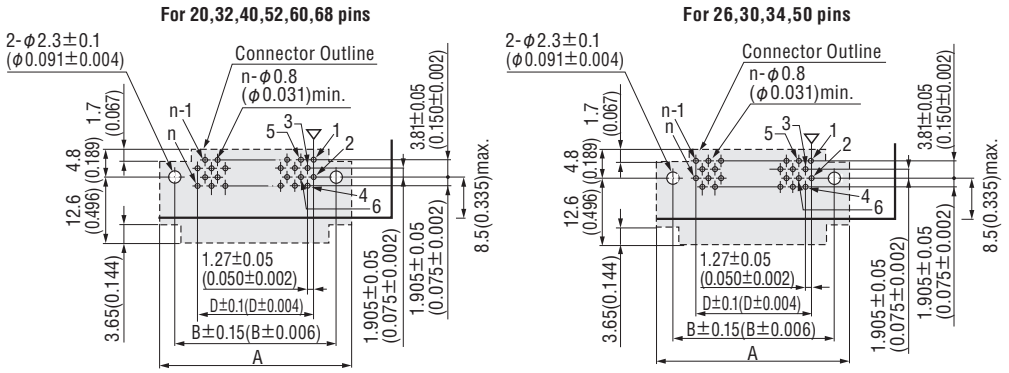

Recommended PCB Thickness $t=1.6^{+0.2}_{-0.1}$ $(0.063^{+0.008}_{-0.004})$

▽=Polarity identification "n" is number of contacts.

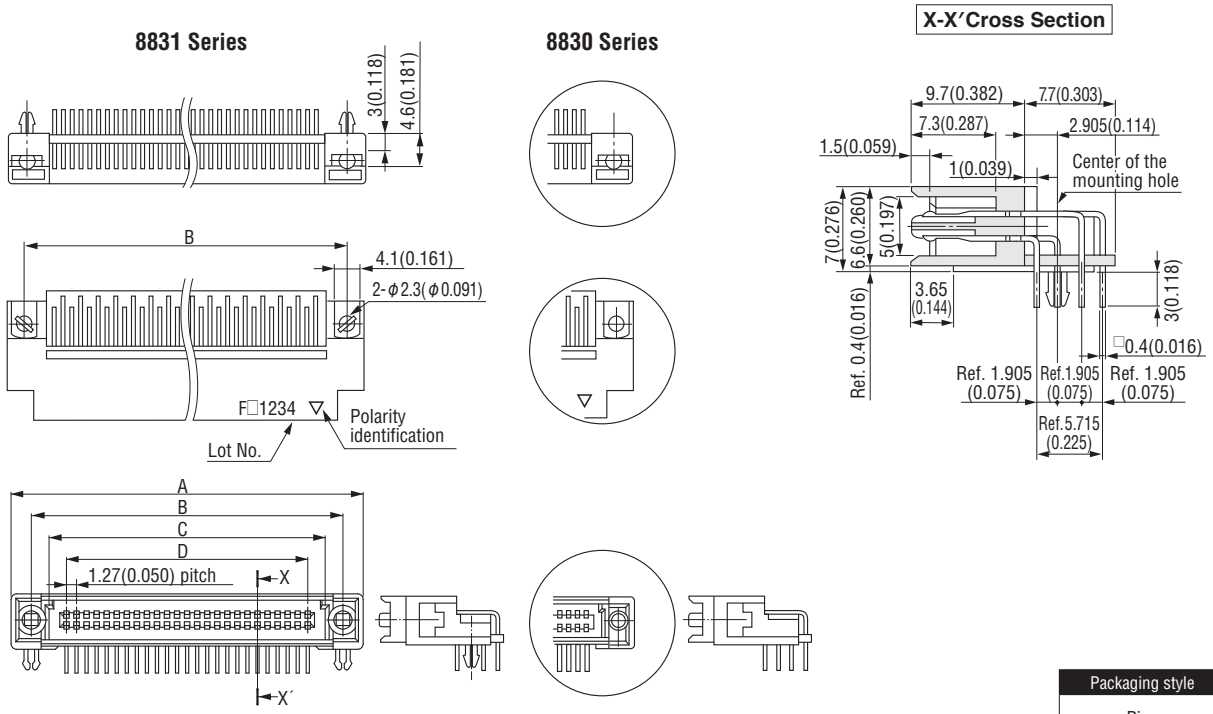

Packaging style
Pipe

Product Table / Dimensions

No. of contacts	Part Number	A	B	C	D	Number of packaging
20	8830/8831-020-170L□-F	25.43 (1.001)	20.32 (0.800)	15.83 (0.623)	11.43 (0.450)	20
26	8830/8831-026-170L□-F	29.24 (1.151)	24.13 (0.950)	19.64 (0.773)	15.24 (0.600)	17
30	8830/8831-030-170L□-F	31.78 (1.251)	26.67 (1.050)	22.18 (0.873)	17.78 (0.700)	16
32	8830/8831-032-170L□-F	33.05 (1.301)	27.94 (1.100)	23.45 (0.923)	19.05 (0.750)	15
34	8830/8831-034-170L□-F	34.32 (1.351)	29.21 (1.150)	24.72 (0.973)	20.32 (0.800)	14
40	8830/8831-040-170L□-F	38.13 (1.501)	33.02 (1.300)	28.53 (1.123)	24.13 (0.950)	13
50	8830/8831-050-170L□-F	44.48 (1.751)	39.37 (1.550)	34.88 (1.373)	30.48 (1.200)	11
52	8830/8831-052-170L□-F	45.75 (1.801)	40.64 (1.600)	36.15 (1.423)	31.75 (1.250)	11
60	8830/8831-060-170L□-F	50.83 (2.001)	45.72 (1.800)	41.23 (1.623)	36.83 (1.450)	10
68	8830/8831-068-170L□-F	55.91 (2.201)	50.80 (2.000)	46.31 (1.823)	41.91 (1.650)	9

CABLE ASSEMBLY / PIN ASSIGNMENT

ORDER CODE 8822□-□□□-171□F-□□□□-□□-□

① ② ③ ④ ⑤ ⑥ ⑦ ⑧ ⑨

① 【Type】 Receptacle **8822E**：Eject lock **8822**：One touch lock

② 【No. of contacts】 **020**：20pin **026**：26pin **030**：30pin **032**：32pin **034**：34pin **036**：36pin **040**：40pin **050**：50pin **052**：52pin **060**：60pin **068**：68pin **080**：80pin **100**：100pin
In 8822 series (One Touch Lock type), 36, 80, and 100 pin connectors are not available.

③ 【Contact name】 **171**

④ 【Plating of contact area】 **Omit**：Au 0.05μm(Standard) **D**：Au 0.25μm(Upon request)

⑤ 【RoHS】 **F**：RoHS Compliant

⑥ 【Cable length (cm)】 **L**：Dimension (3cm min.) (Example：013=13cm)

⑦ 【Cable type】 **Omit**：Flat cable ***S**：Intermittent bonded cable ***T**：Twist&Flat cable

⑧ 【Wiring code】 **AA, AC, BB, BD, AO, CO**

⑨ 【BB-wired products】 **Omit**：Twist type **C**：Through type

*BB and BD codes are available for only intermittent bonded and Twist&Flat cables. *If you would like semi-customized products, please contact your local KEL sales office.

▶Cable assemblies

8822□-□□□-171□F-□□□□-AO

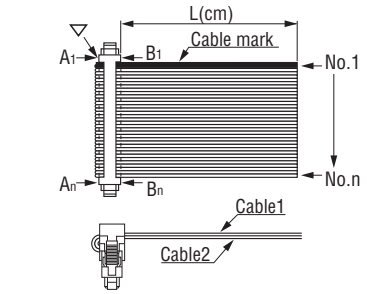

A1 — Cable1/No.1
A2 — Cable1/No.2
⋮
An — Cable1/No.n

B1 — Cable2/No.1
B2 — Cable2/No.2
⋮
Bn — Cable2/No.n

▽=Polarity identification

8822□-□□□-171□F-□□□□-CO

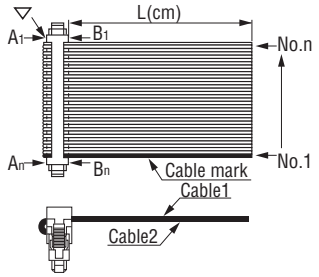

A1 — Cable1/No.n
A2 — Cable1/No.n-1
⋮
An — Cable1/No.1

B1 — Cable2/No.n
B2 — Cable2/No.n-1
⋮
Bn — Cable2/No.1

▽=Polarity identification

8822□-□□□-171□F-□□□□-AA

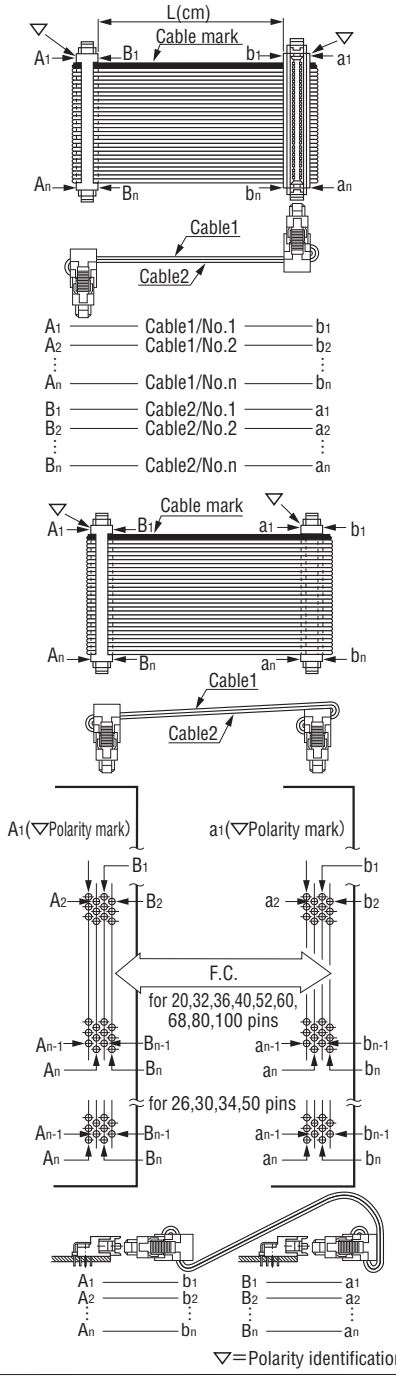

▽=Polarity identification

8822□-□□□-171□F-□□□□-AC

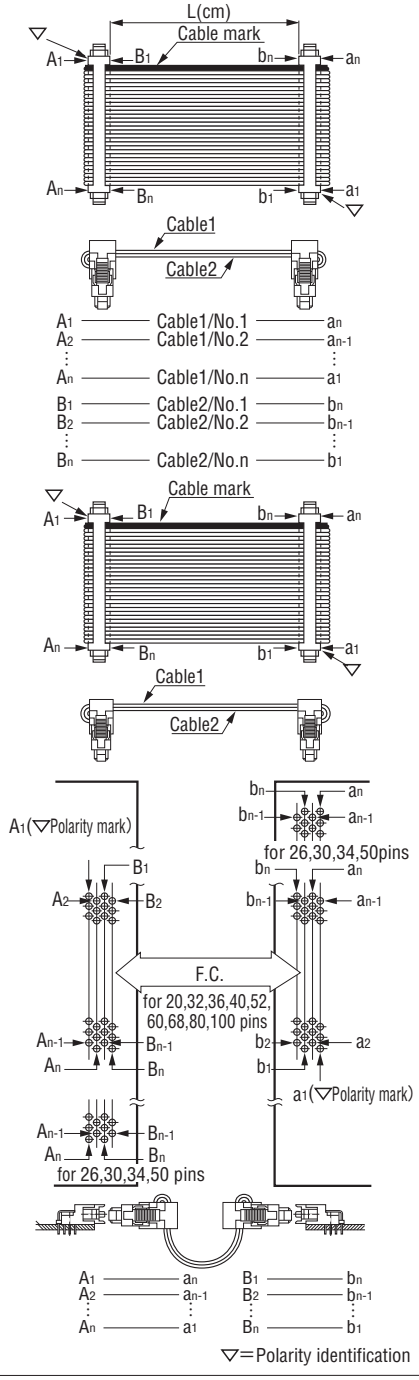

▽=Polarity identification

* Intermittent bonded and Twist&Flat cable have a restriction on cable length (L dimension) because they are terminated at the fused part.
* For AO and CO codes, orders are accepted in even quantities. * Harness end has an extra cable of approximate 1mm beyond the connector edge.

Note: Please be careful when trimming the cable after terminating the 8822E/8822 Series, to protect against the flat ribbon cable that extends beyond the edge of the cable connector body touching the PCB and creating a short circuit.(When used with Right angle Plug connector)

Cable assemblies

8822□-□□□-171□F-□□□ □-BB
(Twist type)

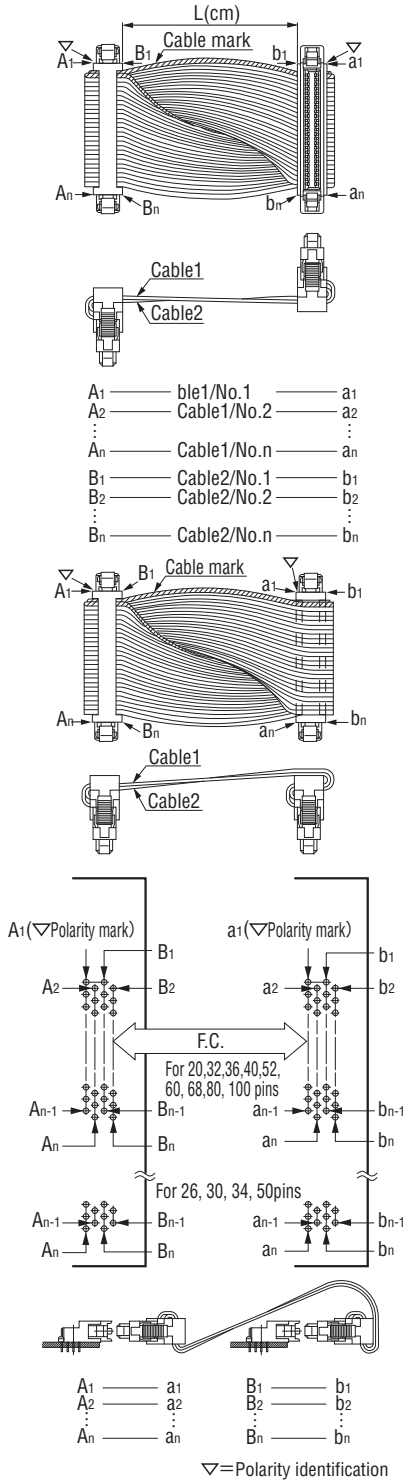

8822□-□□□-171□F-□□□ □-BBC
(Through type)

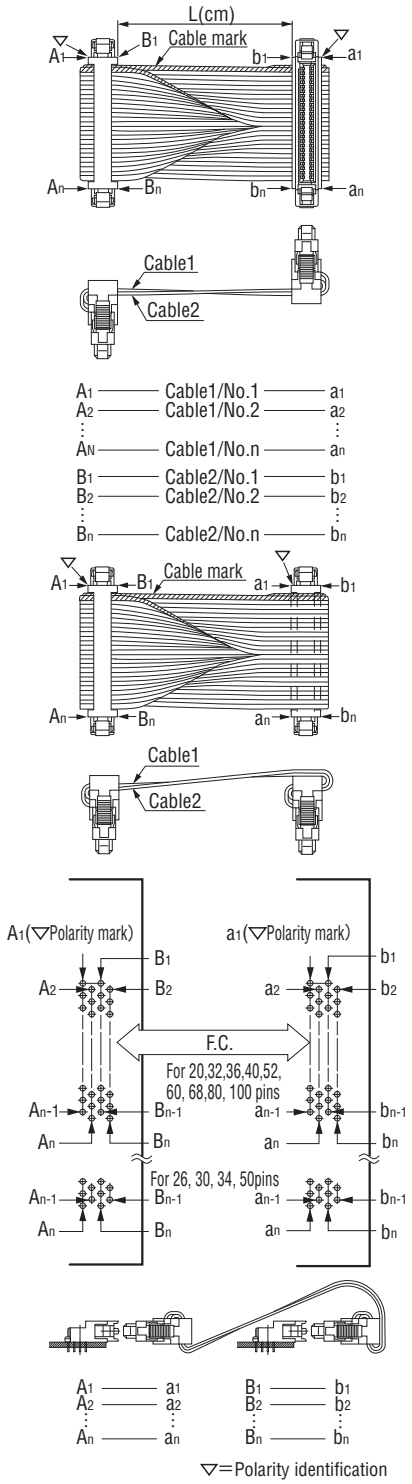

8822□-□□□-171□F-□□□ □-BD

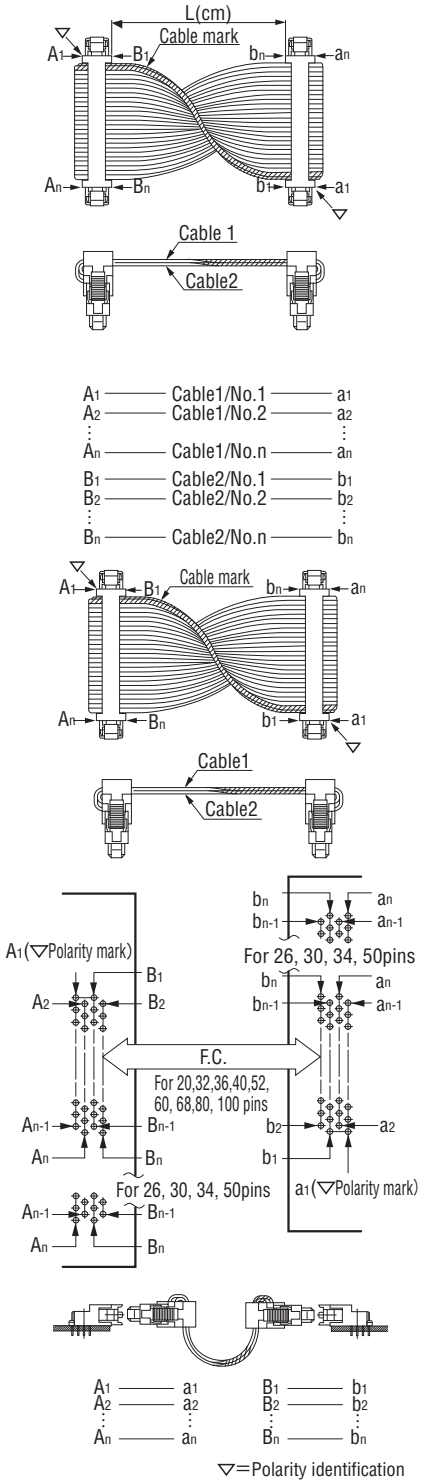

* Intermittent bonded and Twist&Flat cable have a restriction on cable length (L dimension) because they are terminated at the fused part.
* Harness end has an extra cable of approximate 1mm beyond the connector edge.

Note: Please be careful when trimming the cable after terminating the 8822E/8822 Series, to protect against the flat ribbon cable that extends beyond the edge of the cable connector body touching the PCB and creating a short circuit.(When used with Right angle Plug connector)

A smooth procedure from cutting of a flat cable to terminal connection to a connector can be achieved.

A hand press (HP-12), cable terminator, and termination equipment, which are designed to be user-friendly and to achieve advanced workability, can be utilized for more speedy and reliable insulation displacement connection between a flat cable and receptacle-side connector (8822E/8822 Series).
The cable terminator and termination equipment can be easily replaced on a plate of the hand press. By attaching a relevant accessory, a series of tasks, such as those "from cutting of a cable to terminal connection to a connector" can be efficiently completed.

Hand press (HP-12)

After mounting the cable terminator or termination equipment, both cutting and terminal connection can be operated by the handle.

◆Locating fixture for HP-12

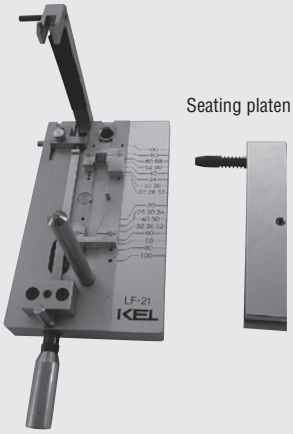

Seating platen

Termination equipment(LF-21)

It is to be mounted on the plate of a hand press to facilitate the insulation displacement connection between a cable and connector (for 8822E/8822 Series).

* The termination equipment (LF-21) is supplied in combination with a seating platen.

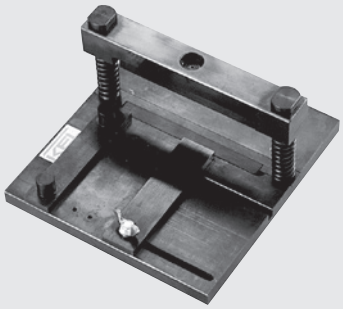

Cable terminator(CT-15)

It is to be mounted on the plate of a hand press to cut a flat cable.

* Configuration of the termination equipment and cable terminator illustrated above may be changed due to their modifications.

M E M O

INTERFACE CONNECTORS

8840/8850/8855 SERIES

B.C.E. S.r.l.
Via Regina Pacis, 54/c - I 41049 Sassuolo (MO)
Tel.: (+39) 0536 811616 - Fax.: (+39) 0536 811500
e-mail: bce@bce.it - Website: www.bce.it

KEL's CUSTOMIZED HARNESSES

KEL also offers our cable connectors pre-assembled with cables to make harness assemblies, which are tailored to required specifications of our customers. KEL's professional harness engineers will provide you with assistance in total product design, and we take responsibilities in procurement and control of cables and other components. If you would like such a harness assembly, all you need to do is to send your order of the connector as "harness assembly" to KEL. Furthermore, based on the quality assurance as a harness assembly product we provide, we will solve your problems with the assembly after purchasing it.
If you need a standard harness assembly, our quick order system can offer you a more speedy response.
Drawing on the advantages and know-how we maintain as a connector manufacturer as well as using our abundant experience and achievements in our harness business, we are committed to offering you superior harness products that flexibly meet your requirements.

◆Customized harnesses process

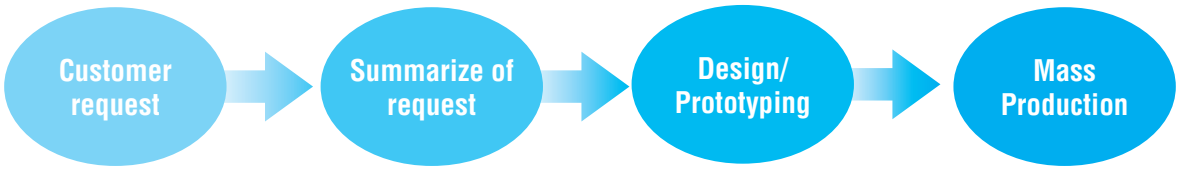

◆Customized harnesses examples

Example of noise suppression
Mounting a ferrite core

Example of shielding
Removal of sheath

Example of cable protection
Attaching a braided sleeve

Example of shielding
Attaching a drain wire

Exampls of cable bundling
Bundling with a shrinkable tube

Example of cable bundling
Bundling with a PTFE tape

Example of cable bundling
Bundling with a shrinkable tube

Example of cable bundling
Partial bundling with tape

Example of cable bundling
Bundling with a cable tie

Example of noise suppression
Metal shell

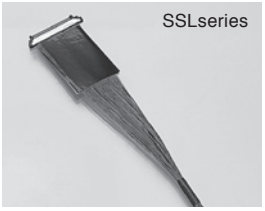

Example of cable protection
Taping

Example of cable bundling
Attaching a spiral tube

Our customization service is flexible. Please feel free to consult with your local KEL sales office regarding the specifications you need.

8840 / 8850 / 8855 SERIES

1.27mm PITCH I/O CONNECTOR

RoHS Compliant

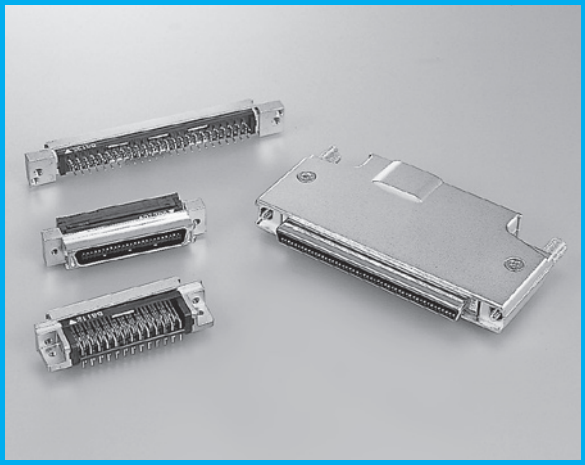

FEATURES

- Easy to use one-touch latch for models with 20 - 80 pins (100pin: Lock screw)
- With a completely-independent two-point contact system, a stable contact pressure is maintained at all times.
- Diecast cover controls EMI.
- D-shape housing prevents mis-insertion.
- Insulator prevents deformation of contact.
- Flat cable version of 8855 Series is available.

ORDER CODE

8840-□□□-174□D-F

① ② ③ ④ ⑤ ⑥

*Please order in multiples of the quantity per package.

① 【Type】 8840 : Receptacle (Cable side connector)

② 【Number of contacts】 020 : 20pin 028 : 28pin 034 : 34pin 050 : 50pin 060 : 60pin 068 : 68pin 080 : 80pin 100 : 100pin

③ 【Contact name】 174

④ 【Recommended cable】 A : #28 AWG (7/0.127) Discrete wire cable B : #28 AWG (7/0.127) Laminated wire cable
C : #30 AWG (7/0.10) Discrete wire cable* D : #30 AWG (7/0.10) Laminated wire cable*

⑤ 【Plating of contact area】 D : 0.25μm min.

⑥ 【RoHS】 F : RoHS compliant

If you would like a C or D type connector, please contact your local KEL sales office.

ORDER CODE

8850-□□□-170□D-F

① ② ③ ④ ⑤ ⑥

*Please order in multiples of the quantity per package.

① 【Type】 8850 : Plug (PCB side connector)

② 【Number of contacts】 020 : 20pin 028 : 28pin 034 : 34pin 050 : 50pin 060 : 60pin 068 : 68pin 080 : 80pin 100 : 100pin

③ 【Contact name】 170

④ 【Contact tail style】 S : Straight L : Right angle

⑤ 【Plating of contact area】 D : 0.25μm min.

⑥ 【RoHS】 F : RoHS compliant

ORDER CODE

8855-□□□-174□D-F

① ② ③ ④ ⑤ ⑥

*Please order in multiples of the quantity per package.

① 【Type】 8855 : Plug (Cable plug)

② 【Number of contacts】 020 : 20pin 028 : 28pin 034 : 34pin 050 : 50pin 060 : 60pin 068 : 68pin 080 : 80pin 100 : 100pin

③ 【Contact name】 174

④ 【Recommended cable】 A : #28 AWG (7/0.127) Discrete wire cable B : #28 AWG (7/0.127) Laminated wire cable
C : #30 AWG (7/0.10) Discrete wire cable* D : #30 AWG (7/0.10) Laminated wire cable* F : #28 AWG (7/0.127) Flat ribbon cable

⑤ 【Contact tail style】 D : 0.25μm min.

⑥ 【RoHS】 F : RoHS compliant

If you would like a C or D type connector, please contact your local KEL sales office.

B.C.E. S.r.l. Via Regina Pacis, 54/c - I 41049 Sassuolo (MO) Tel.: (+39) 0536 811616 - Fax.: (+39) 0536 811500 e-mail: bce@bce.it - Website: www.bce.it

SPECIFICATIONS

Material and plating		Electrical Characteristics	
Insulator material	Glass-filled Nylon 66 (UL94V-0), Black	Current rating	0.5A per contact
Contact material	Copper alloy	Contact resistance	30mΩ max.
Contact plating	[8840/8855]Gold over Nickel [8850](Contact area) Gold over Nickel (Terminal area) Tin copper over Nickel	Dielectric withstanding voltage	650V AC for 1 minute
		Insulation resistance	1,000MΩ min. at 500V DC
		Operating temperature	-55°C to +85°C
Metal shell material	Steel	Recommended cable	#28 AWG(7/0.127) Outer diameter of insulation : 0.58mm
Metal shell plating	Nickel over Copper		
Diecast shell material	[8850/8855]Zinc alloy		

Diecast cover for 8840

ORDER CODE

8840S-□□□-□-CVR

① ② ③

*Please order in multiples of the quantity per package.

① 【Diecast cover type】 8840S : Cover for straight cable exit

② 【Number of contacts】 020 : 20pin 028 : 28pin 034 : 34pin 050 : 50pin 060 : 60pin 068 : 68pin 080 : 80pin 100 : 100pin

③ 【Mounted panel thickness】 (Only 100 pin)
1 : No panel 2 : 0.8~1.0mm 3 : 1.6mm
Not to be specified as the 20 to 80 pin types due to a spring lock system

*Connectors and diecast cover are required when you use a 20 to 80 pin type 8840 Series connector.

SPECIFICATIONS

Material and plating	
Diecast cover	[20-80 pin] Zinc alloy [100 pin] Aluminum
Diecast cover plating	Nickel over Copper
Spring lock material	Stainless steel
Lock screw material	Steel Copper plating
Lock screw plating	Nickel over Copper
Cable clamp material	Stainless steel

Lock Nut(100pin connector only)

ORDER CODE

8850-SR-□□

① ②

*Lock nuts are sold in pairs. *Please order in multiples of the quantity per package.

① 【Lock nut】 8850-SR : Lock nut for 8850

② 【Panel thickness】 01 : No panel 02 : 1.0mm 03 : 1.6mm 05 : 0.8mm

*Connectors and lock nuts are required when you use a 100 pin type 8850/8855 Series connector.
*The connector may be adjusted to a panel thickness not listed above. If you consider using one for such a panel, please feel free to contact us.

SPECIFICATIONS

Material and plating	
Lock nut material	Steel
Lock nut plating	Nickel over Copper

Contact Concept (Contacts with 2 mating points straight-beam construction)

◆Outline

KEL has developed a unique straight beam contact with two independent mating points for male and female half pitch connectors which offers low insertion and withdrawal forces with high reliability. In response to the rapidly changing requirements for connectors, from card edge to standard pitch two piece to half pitch two piece , KEL offers these connectors for today's requirement for high density and reliability.

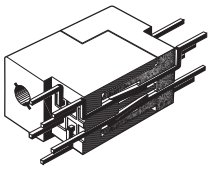

◆Key Features

- With a completely-independent two-point contact system, a stable contact pressure is maintained at all times.
- Contact surface is smooth and tapered to reduce insertion and withdrawal forces and increase connector life.
- Lower cost due to same contact is used for both male and female connectors.
- Mating process of contact is self-cleaning with a long wiping area.
- Insulator aligns the mating connectors, prevents mis-insertion and protects the contacts from bending and breakage.

8840-□□□-174□D-F/8840S-□□□-CVR (Receptacle, Cable side connector, 20-80 pin/diecast cover)

Unit : mm(inch)

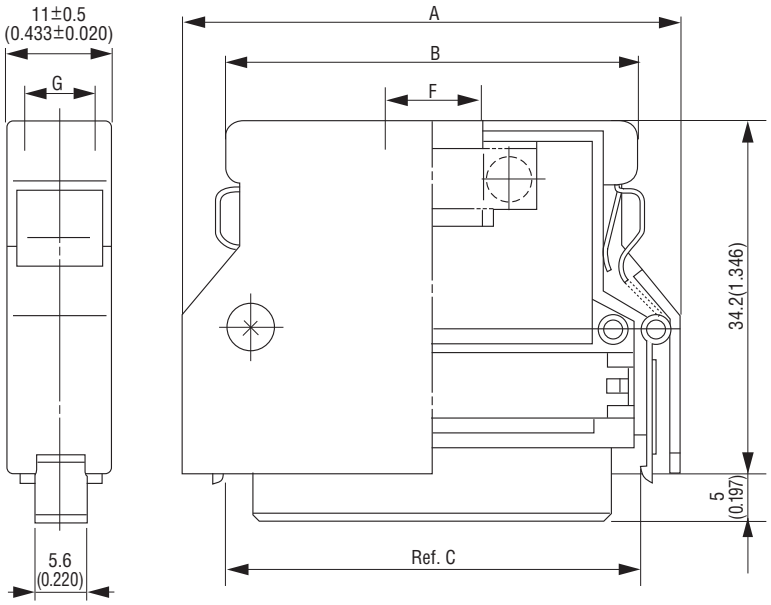

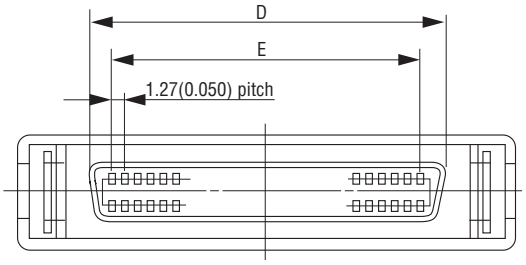

In the product drawing, the connector body (receptacle) is combined with a diecast cover.
When placing your order, please note that the connector (8840-□□-174□D-F) and the diecast cover (8840S-□□□-CVR) must be ordered separately.

Packaging style
Other

Product Table / Dimensions

No. of contacts	Part Number	A	B	C	D	E	F	G	Number of packaging
20	8840-020-174□D-F 8840S-020-CVR	30.00 (1.181)	22.30 (0.878)	21.3 (0.839)	16.48 (0.649)	11.43 (0.450)	6.7 (0.264)	6.7 (0.264)	80
28	8840-028-174□D-F 8840S-028-CVR	35.08 (1.381)	27.38 (1.078)	26.4 (1.039)	21.56 (0.849)	16.51 (0.650)	7.5 (0.295)	7.5 (0.295)	80
34	8840-034-174□D-F 8840S-034-CVR	38.89 (1.531)	31.19 (1.228)	30.2 (1.189)	25.37 (0.999)	20.32 (0.800)	8.7 (0.343)	8.7 (0.343)	80
50	8840-050-174□D-F 8840S-050-CVR	49.05 (1.931)	41.35 (1.628)	40.4 (1.591)	35.53 (1.399)	30.48 (1.200)	10.0 (0.394)	8.5 (0.335)	50
60	8840-060-174□D-F 8840S-060-CVR	55.40 (2.181)	47.70 (1.878)	46.7 (1.839)	41.88 (1.649)	36.83 (1.450)	11.0 (0.433)	8.5 (0.335)	50
68	8840-068-174□D-F 8840S-068-CVR	60.48 (2.381)	52.78 (2.078)	51.8 (2.039)	46.96 (1.849)	41.91 (1.650)	12.0 (0.472)	8.5 (0.335)	50
80	8840-080-174□D-F 8840S-080-CVR	68.10 (2.681)	60.40 2.378)	59.4 (2.339)	54.58 (2.149)	49.53 (1.950)	13.0 (0.512)	8.5 (0.335)	50

8840-100-174□D-F／8840S-100-□-CVR (Receptacle, Cable side connector, 100 pin/diecast cover)

Unit : mm(inch)

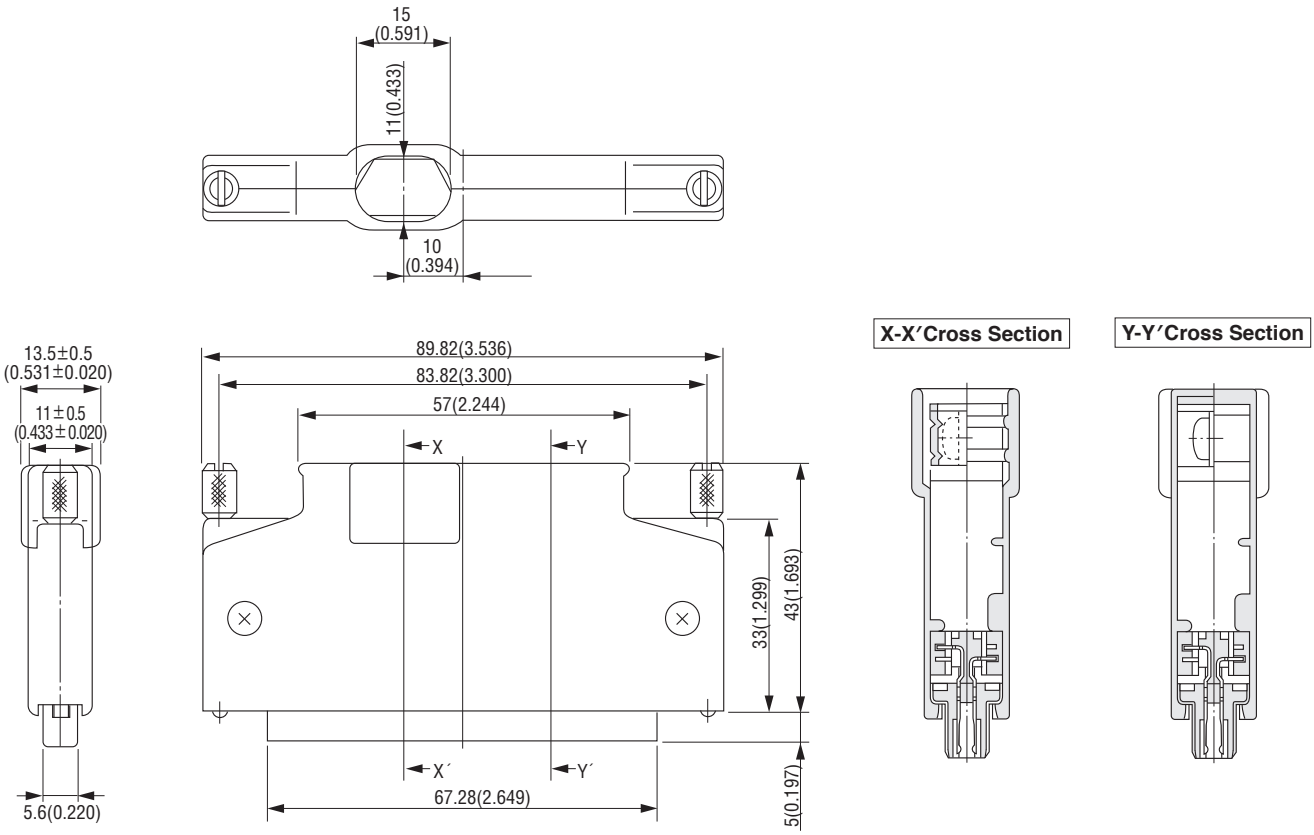

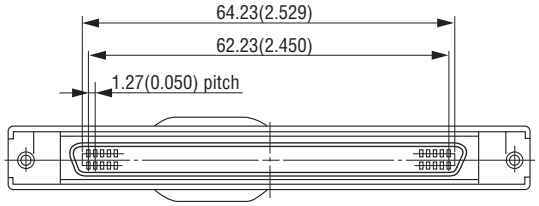

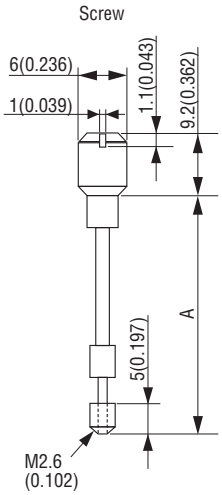

In the product drawing, the connector body (receptacle) is combined with a diecast cover.
When placing your order, please note that the connector (8840-□□-174□D-F) and the diecast cover (8840S-□□□-CVR) must be ordered separately.

Packaging style
Other

Product Table / Dimensions

Part Number	Mounted Panel Thickness	A	Number of packaging
8840-100-174□D-F 8840S-100-1-CVR	No Panel	33.8 (1.331)	50
8840-100-174□D-F 8840S-100-2-CVR	0.8～1.0mm	33.3 (1.311)	50
8840-100-174□D-F 8840S-100-3-CVR	1.6mm	32.8 (1.291)	50

8850-□□□-170SD-F (Plug, PCB side connector, Straight, 20-80 pin)

Unit : mm(inch)

Printed Circuit Board Layout (Component Side View)

For 34,50 pins

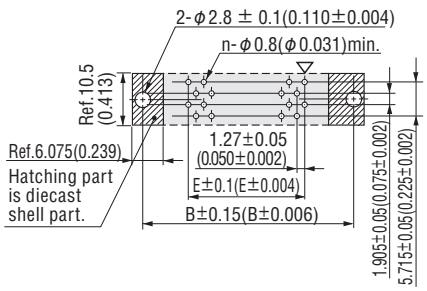

For 20,28,60,68,80 pins

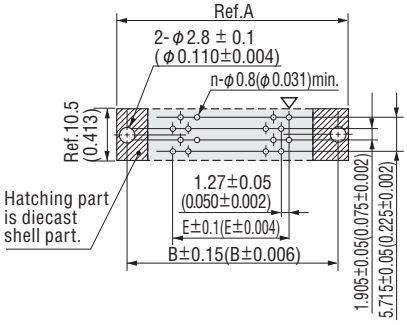

Panel Cutout
For 20,28,34,50,60,68,80 pins

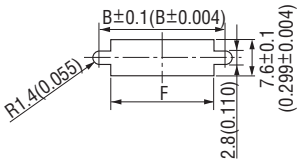

Recommended panel Thickness t2.0(0.079)max.

Recommended PCB Thickness t1.6±0.19(0.063±0.007)
▽=Polarity identification "n" is number of contacts.

For 20,50 pins

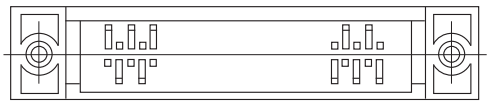

For 28,34,60,68,80 pins

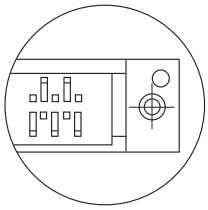

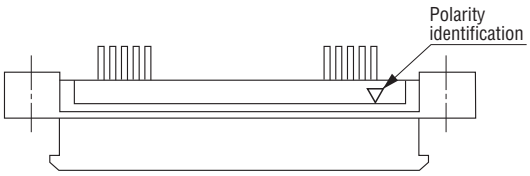

X-X′Cross Section

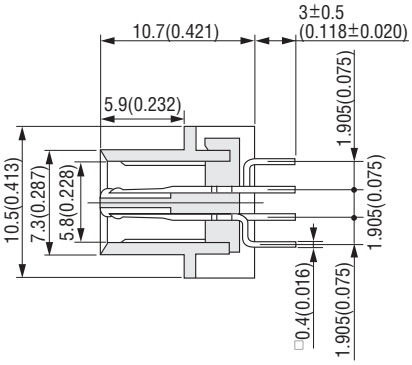

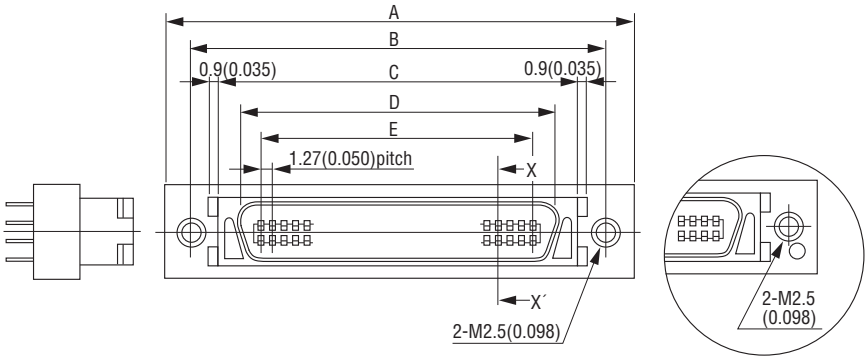

Packaging style
Pipe

Product Table / Dimensions

No. of contacts	Part Number	A	B	C	D	E	F	Number of packaging
20	8850-020-170SD-F	33.40 (1.315)	27.40 (1.079)	21.60 (0.850)	16.73 (0.659)	11.43 (0.450)	24.40 (0.961)	15
28	8850-028-170SD-F	38.48 (1.515)	32.48 (1.279)	26.68 (1.050)	21.81 (0.859)	16.51 (0.650)	29.48 (1.161)	13
34	8850-034-170SD-F	42.29 (1.665)	36.29 (1.429)	30.49 (1.200)	25.62 (1.009)	20.32 (0.800)	33.29 (1.311)	11
50	8850-050-170SD-F	52.45 (2.065)	46.45 (1.829)	40.65 (1.600)	35.78 (1.409)	30.48 (1.200)	43.45 (1.711)	9
60	8850-060-170SD-F	58.80 (2.315)	52.80 (2.079)	47.00 (1.850)	42.13 (1.659)	36.83 (1.450)	49.80 (1.961)	8
68	8850-068-170SD-F	63.88 (2.515)	57.88 (2.279)	52.08 (2.050)	47.21 (1.859)	41.91 (1.650)	54.88 (2.161)	7
80	8850-080-170SD-F	71.50 (2.815)	65.50 (2.579)	59.70 (2.350)	54.83 (2.159)	49.53 (1.950)	62.50 (2.461)	7

8850-100-170SD-F (Plug, PCB side connector, Straight, 100 pin)

Unit : mm(inch)

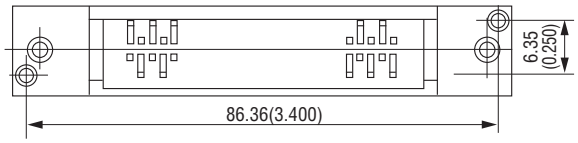

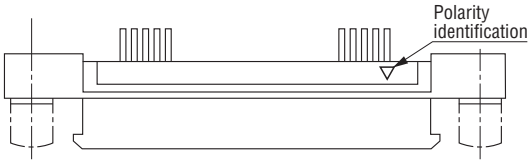

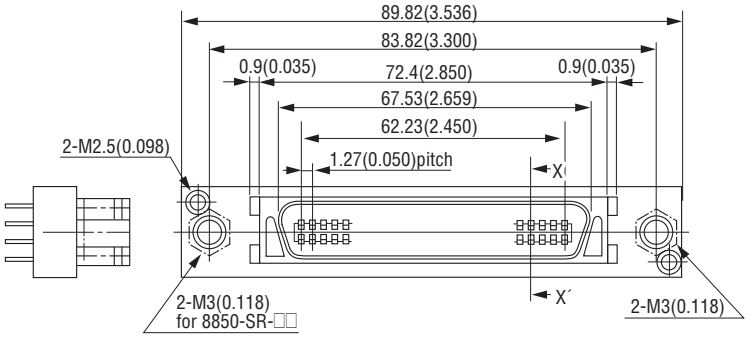

Printed Circuit Board Layout (Component Side View)

For 100 pin

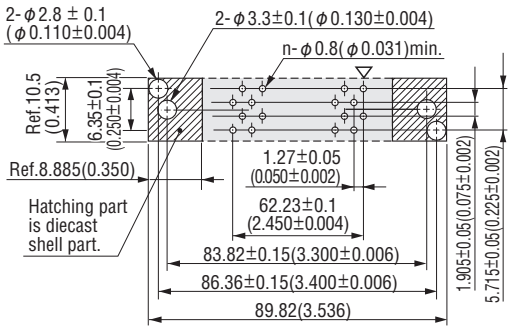

Recommended PCB Thickness t1.6±0.19(0.063±0.007)

▽=Polarity identification "n" is number of contacts.

Panel Cutout For 100 pin

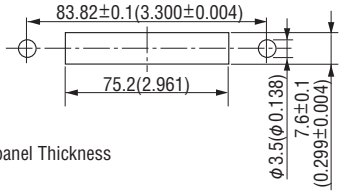

Recommended panel Thickness
t2.0(0.079)max.

X-X′Cross Section

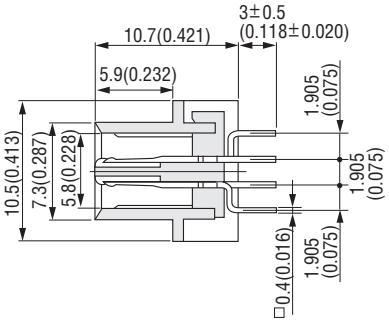

Nut for Lock Screw

8850-SR-01
(Without mounting panel)

8850-SR-03
mounting panel
t1.6mm(0.063)

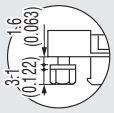

8850-SR-02
mounting panel
t1.0mm(0.039)

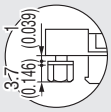

8850-SR-05
mounting panel
t0.8mm(0.031)

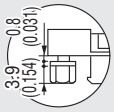

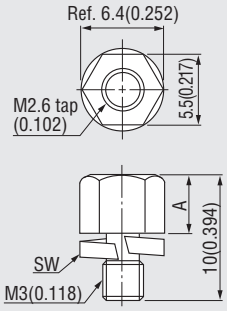

A	Part Number
4.7(0.185)	01(t 0)
3.7(0.146)	02(t 1.0)
3.1(0.122)	03(t 1.6)
3.9(0.154)	05(t 0.8)

Product Table

Packaging style
Pipe

No. of contacts	Part Number	Number of packaging
100	8850-100-170SD-F	5

8850-□□□-170LD-F (Plug, PCB side connector, Right angle, 20-80 pin)

Unit : mm(inch)

Printed Circuit Board Layout (Component Side View)

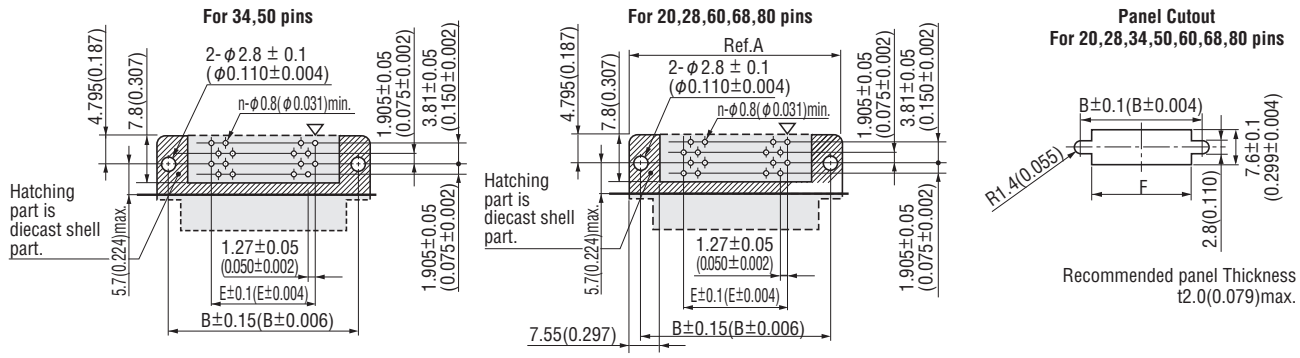

Recommended PCB Thickness t1.6±0.19(0.063±0.007)

▽=Polarity identification "n" is number of contacts.

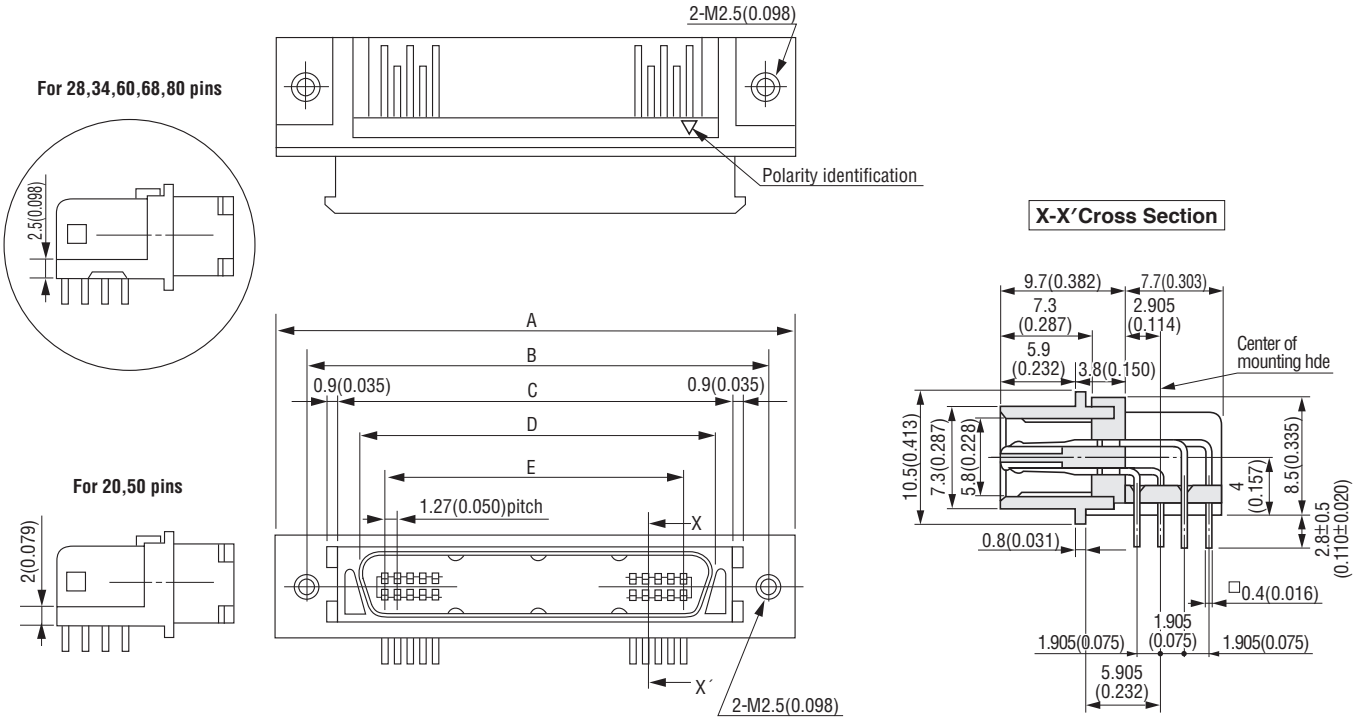

Packaging style
Pipe

Product Table / Dimensions

No. of contacts	Part Number	A	B	C	D	E	F	Number of packaging
20	8850-020-170LD-F	33.40 (1.315)	27.40 (1.079)	21.60 (0.850)	16.73 (0.659)	11.43 (0.450)	24.40 (0.961)	14
28	8850-028-170LD-F	38.48 (1.515)	32.48 (1.279)	26.68 (1.050)	21.81 (0.859)	16.51 (0.650)	29.48 (1.161)	13
34	8850-034-170LD-F	42.29 (1.665)	36.29 (1.429)	30.49 (1.200)	25.62 (1.009)	20.32 (0.800)	33.29 (1.311)	11
50	8850-050-170LD-F	52.45 (2.065)	46.45 (1.829)	40.65 (1.600)	35.78 (1.409)	30.48 (1.200)	43.45 (1.711)	9
60	8850-060-170LD-F	58.80 (2.315)	52.80 (2.079)	47.00 (1.850)	42.13 (1.659)	36.83 (1.450)	49.80 (1.961)	8
68	8850-068-170LD-F	63.88 (2.515)	57.88 (2.279)	52.08 (2.050)	47.21 (1.859)	41.91 (1.650)	54.88 (2.161)	7
80	8850-080-170LD-F	71.50 (2.815)	65.50 (2.579)	59.70 (2.350)	54.83 (2.159)	49.53 (1.950)	62.50 (2.461)	7

8850-100-170LD-F (Plug, PCB side connector, Right angle, 100 pin)

Unit : mm(inch)

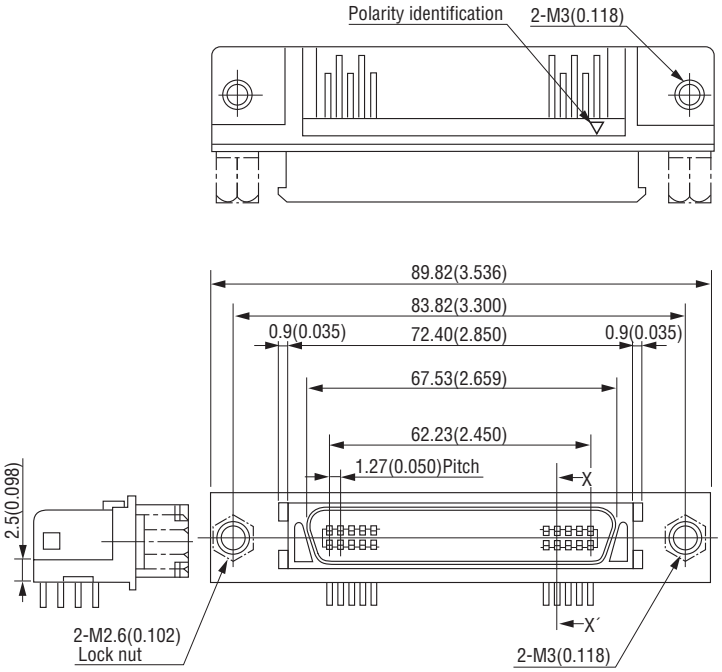

Printed Circuit Board Layout (Component Side View)

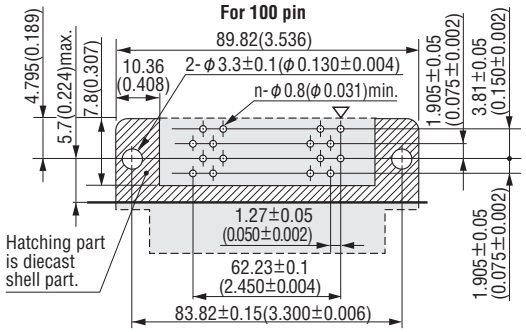

Recommended PCB Thickness t1.6±0.19(0.063±0.007)

▽=Polarity identification "n" is number of contacts.

Panel Cutout For 100 pin

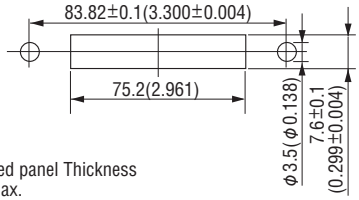

Recommended panel Thickness
t1.6(0.063)max.

X-X′Cross Section

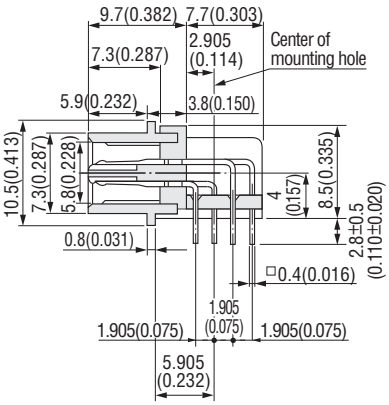

Nut for Lock Screw

8850-SR-01
(Without mounting panel)

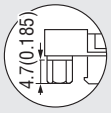

8850-SR-03
mounting panel
t1.6mm(0.063)

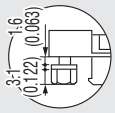

8850-SR-02
mounting panel
t1.0mm(0.039)

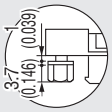

8850-SR-05
mounting panel
t0.8mm(0.031)

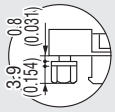

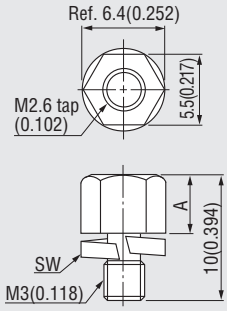

A	Part Number
4.7(0.185)	01(t 0)
3.7(0.146)	02(t 1.0)
3.1(0.122)	03(t 1.6)
3.9(0.154)	05(t 0.8)

Packaging style
Pipe

Product Table

No. of contacts	Part Number	Number of packaging
100	8850-100-170LD-F	5

8855-□□□-174□D-F (Cable plug, 20-80 pin)

Unit : mm(inch)

Panel Cutout

For 20,28,34,50,60,68,80 pins

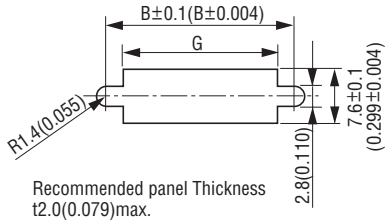

Recommended panel Thickness
t2.0(0.079)max.

For 20,50 pins

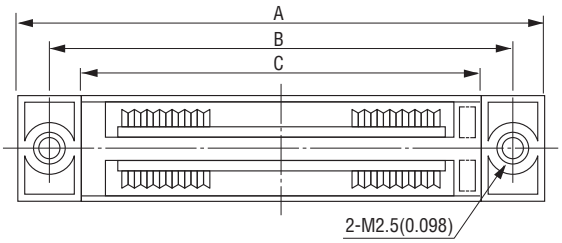

For 28,34,60,68,80 pins

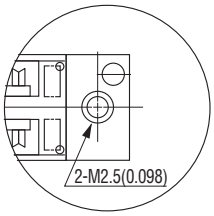

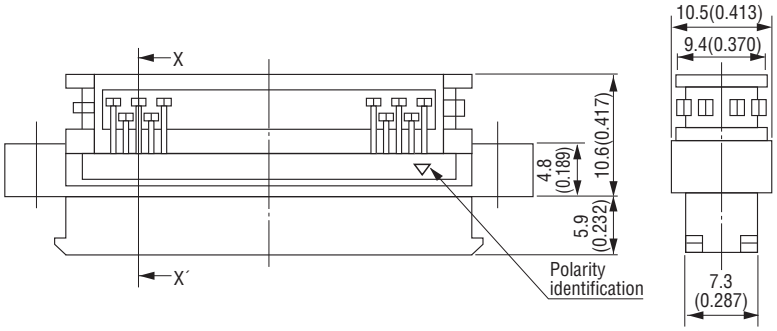

X-X´Cross Section

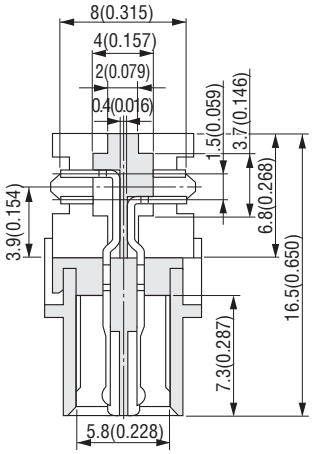

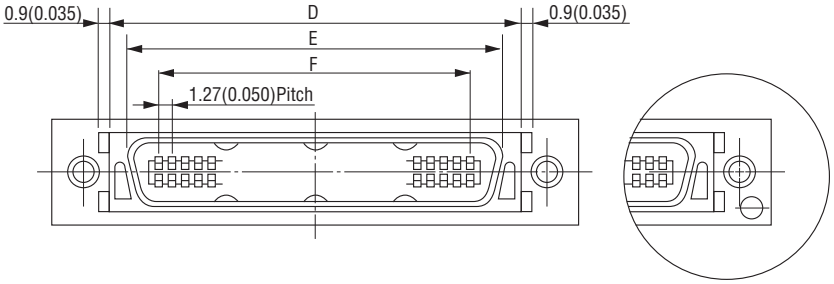

Packaging style
Pipe

Product Table / Dimensions

No. of contacts	Part Number	A	B	C	D	E	F	G	Number of packaging
20	8855-020-174□D-F	33.40 (1.315)	27.40 (1.079)	20.75 (0.817)	21.60 (0.850)	16.73 (0.659)	11.43 (0.450)	24.40 (0.961)	14
28	8855-028-174□D-F	38.48 (1.515)	32.48 (1.279)	25.83 (1.017)	26.68 (1.050)	21.81 (0.859)	16.51 (0.650)	29.48 (1.161)	13
34	8855-034-174□D-F	42.29 (1.665)	36.29 (1.429)	29.64 (1.167)	30.49 (1.200)	25.62 (1.009)	20.32 (0.800)	33.29 (1.311)	11
50	8855-050-174□D-F	52.45 (2.065)	46.45 (1.829)	39.80 (1.567)	40.65 (1.600)	35.78 (1.409)	30.48 (1.200)	43.45 (1.711)	9
60	8855-060-174□D-F	58.80 (2.315)	52.80 (2.079)	46.15 (1.817)	47.00 (1.850)	42.13 (1.659)	36.83 (1.450)	49.80 (1.961)	8
68	8855-068-174□D-F	63.88 (2.515)	57.88 (2.279)	51.23 (2.017)	52.08 (2.050)	47.21 (1.859)	41.91 (1.650)	54.88 (2.161)	7
80	8855-080-174□D-F	71.50 (2.815)	65.50 (2.579)	58.85 (2.317)	59.70 (2.350)	54.83 (2.159)	49.53 (1.950)	62.50 (2.461)	7

8855-100-174□D-F (Cable plug, 100 pin)

Unit : mm(inch)

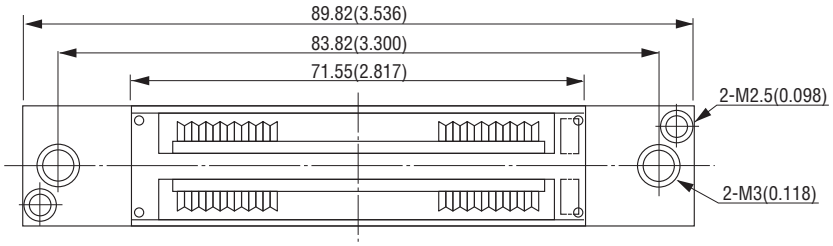

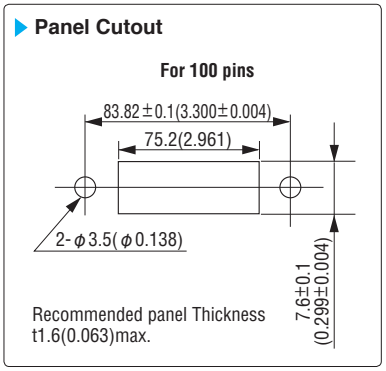

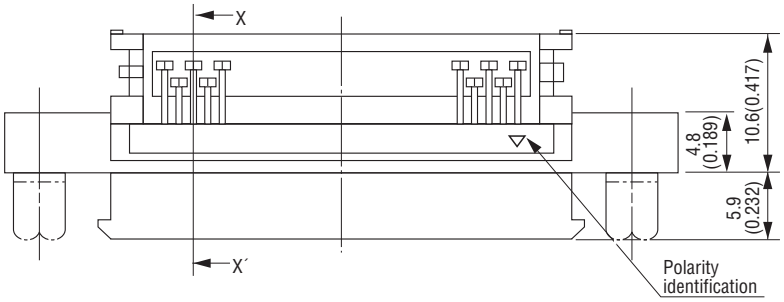

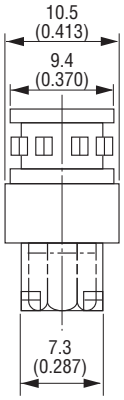

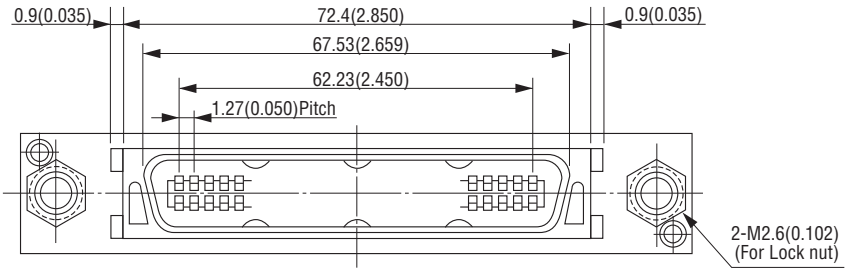

X-X′Cross Section

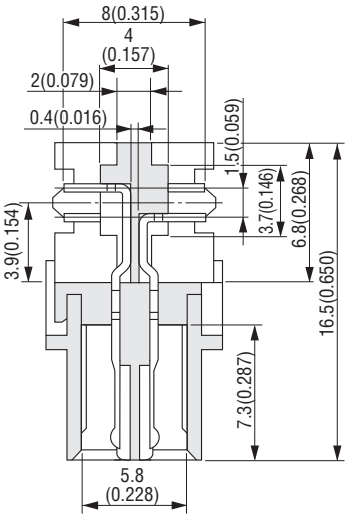

Product Table

Packaging style
Pipe

No. of contacts	Part Number	Number of packaging
100	8855-100-174□D-F	5

CABLE ASSEMBLY

ORDER CODE

Cable side connector(20~80 pin)

8840S-□□□-174□DF-□□□ □□□

① ② ③ ④ ⑤ ⑥ ⑦ ⑧ ⑨ ⑩

①	【Diecast cover】 8840S : Straight cable exit
②	【Number of contacts】 020 : 20pin 028 : 28pin 034 : 34pin 050 : 50pin 060 : 60pin 068 : 68pin 080 : 80pin
③	【Contact name】 174
④	【Recommended cable】 A : #28 AWG (7/0.127) Discrete wire cable B : #28 AWG (7/0.127) Laminated wire cable
⑤	【Plating of contact area】 D : 0.25μm min.
⑥	【RoHS】 F : RoHS compliant
⑦	【Cable length(cm)】 L : (Example: 008=8cm)
⑧	【Wiring code】 S : Single W : Double
⑨	【Connector direction】 Left:CN1,Right:CN2 (W:Double) 1 : AA 2 : AB 3 : BA 4 : BB (S:Single) 5 : A 6 : B
⑩	【Wiring identifier】 H : Standard wiring J : Semi-standard wiring

▶Cable assemblies

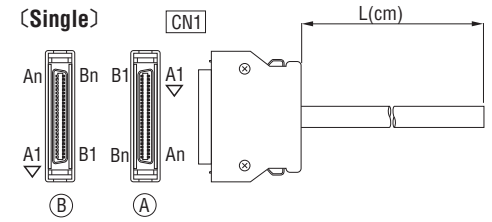

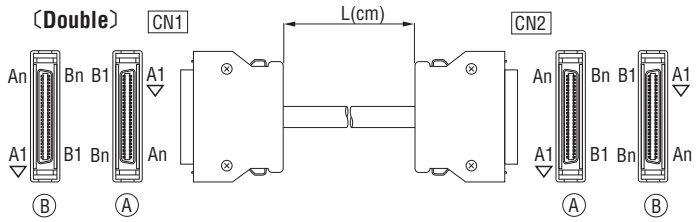

▽= Polarity identification

ORDER CODE

Cable side connector(100 pin)

8840S-100-174□DF□-□□□ □□□

① ② ③ ④ ⑤ ⑥ ⑦ ⑧ ⑨ ⑩ ⑪

①	【Diecast cover】 8840S : Straight cable exit
②	【Number of contacts】 100 : 100pin
③	【Contact name】 174
④	【Recommended cable】 A : #28 AWG (7/0.127) Discrete wire cable B : #28 AWG (7/0.127) Laminated wire cable
⑤	【Plating of contact area】 D : 0.25μm min.
⑥	【RoHS】 F : RoHS compliant
⑦	【Mounting panel thickness】 1 : No panel 2 : Panel thickness from 0.8~1.0mm 3 : Panel thickness of 1.6mm
⑧	【Cable length(cm)】 L : (Example: 008=8cm)
⑨	【Wiring code】 S : Single W : Double
⑩	【Connector direction】 Left:CN1,Right:CN2 (W:Double) 1 : AA 2 : AB 3 : BA 4 : BB (S:Single) 5 : A 6 : B
⑪	【Wiring identifier】 H : Standard wiring J : Semi-standard wiring

▶Cable assemblies

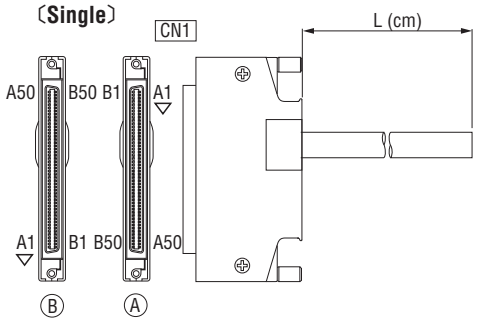

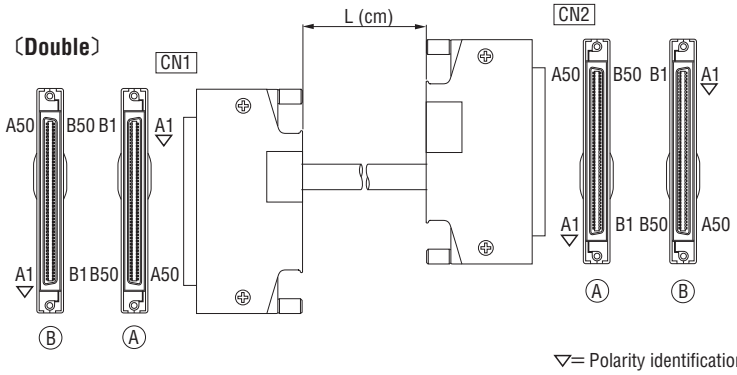

▽= Polarity identification

For harness quotations, please contact your local KEL sales office.
For S (Wiring Code), orders are accepted in even quantities.

ORDER CODE

Cable Plug

8855-□□□-174□DF-□□□ □□□

① ② ③ ④ ⑤ ⑥ ⑦ ⑧ ⑨ ⑩

①	【Type】 **8855 :** Straight cable exit
②	【Number of contacts】 **020 :** 20pin **028 :** 28pin **034 :** 34pin **050 :** 50pin **060 :** 60pin **068 :** 68pin **080 :** 80pin **100 :** 100pin
③	【Contact name】 **174**
④	【Recommended cable】 **A :** #28 AWG (7/0.127) Discrete wire cable **B :** #28 AWG (7/0.127) Laminated wire cable
⑤	【Plating of contact area】 **D :** 0.25μm min.
⑥	【RoHS】 **F :** RoHS compliant
⑦	【Cable length(cm)】 **L :** (Example: 013=13cm)
⑧	【Wiring code】 **S :** Single **W :** Double
⑨	【Connector direction】 Left:CN1,Right:CN2 (W:Double) **1 :** AA **2 :** AB (S:Single) **5 :** A
⑩	【Wiring identifier】 **H :** Standard wiring **J :** Semi-standard wiring

▶Cable assemblies

〔Single〕

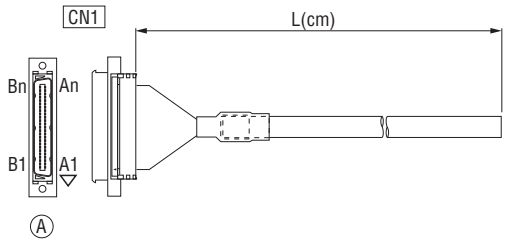

〔Double〕

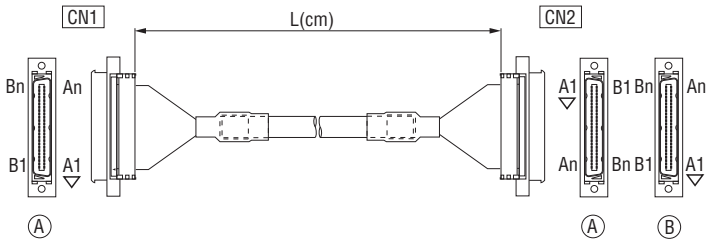

▽= Polarity identification

For harness quotations, please contact your local KEL sales office.
For S(Wiring Code), orders are accepted in even quantities.

ORDER CODE

Cable plug(Flat ribbon type)

8855-□□□-174FDF-□□□□-□□□

① ② ③ ④ ⑤ ⑥ ⑦ ⑧ ⑨ ⑩

①	【Type】 8855 : Cable plug
②	【Number of contacts】 020 : 20pin 028 : 28pin 034 : 34pin 050 : 50pin 060 : 60pin 068 : 68pin 080 : 80pin 100 : 100pin
③	【Contact name】 174
④	【Recommended cable】 F : #28 AWG (7/0.127) Flat cable
⑤	【Plating of contact area】 D : 0.25μm or min.(Standard)
⑥	【RoHS】 F : RoHS compliant
⑦	【Cable length(cm)】 L : (Example: 013=13cm)
⑧	【Cable type】 Omit : Flat cable(Standard) S : Intermittent bonded cable* T : Twist&Flat cable*
⑨	【Wiring code】 AA,AC,BB,BD,AO,CO
⑩	【Wiring type】 Omit : Twist type C : Through type(Wiring code : BB)

Only flat and twisted-flat cables are available for BB and BD-wired products.
Flat and twisted-flat cables have a limited L dimension as they are IDC at the fused connections.

Cable assemblies

BB

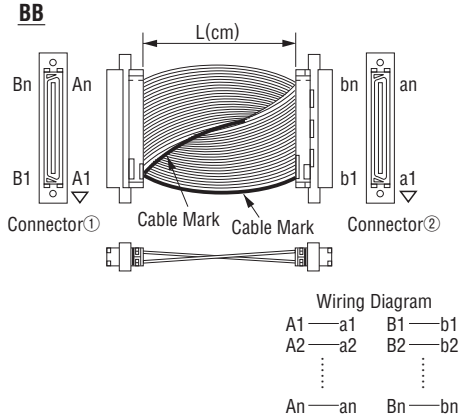

AA

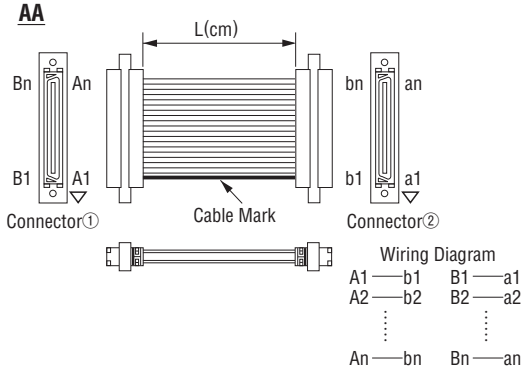

BD

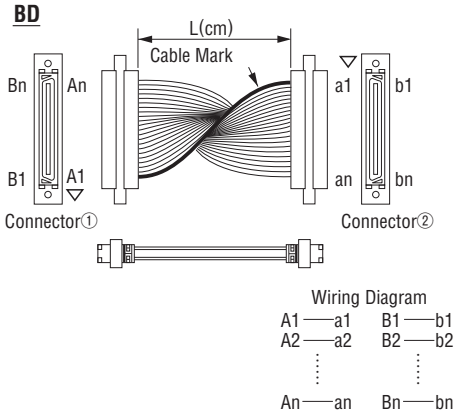

AC

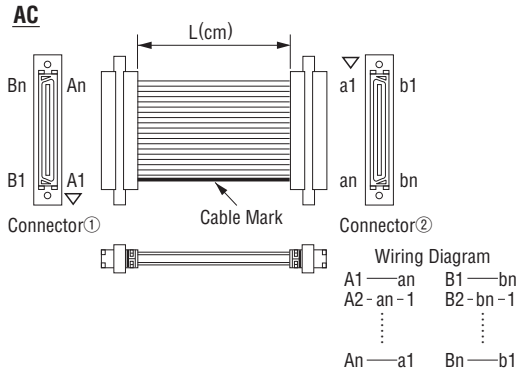

BB-C

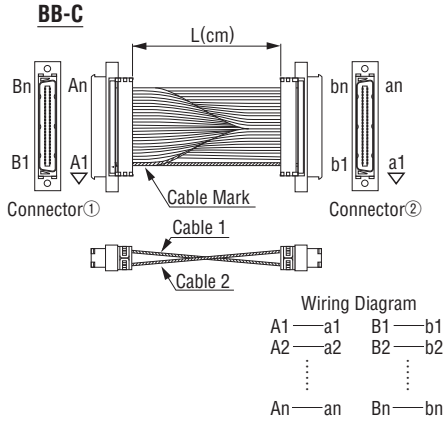

AO

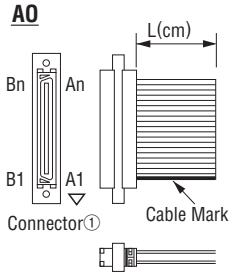

CO

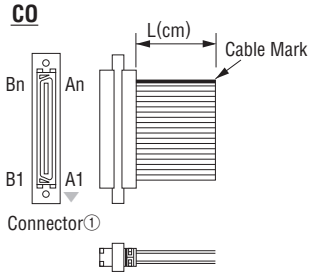

▽= Polarity identification

For harness quotations, please contact your local KEL sales office. For S, AO and CO (Wiring Codes), orders are accepted in even quantities.

B.C.E. S.r.l. Via Regina Pacis, 54/c - I 41049 Sassuolo (MO) Tel.: (+39) 0536 811616 - Fax.: (+39) 0536 811500 e-mail: bce@bce.it - Website: www.bce.it

8840/8855 Standard Wiring Table

Standard wiring table (20 pin)

Wire No.	Twist No.	Wire Color	Mark Color	Marking	CN1 Pin No.	CN2 Pin No.
1	1	Orange	Red	'	A1	A1
2			Black		A2	A2
3	2	Gray	Red		A3	A3
4			Black		A4	A4
5	3	White	Red		A5	A5
6			Black		A6	A6
7	4	Yellow	Red		A7	A7
8			Black		A8	A8
9	5	Pink	Red		A9	A9
10			Black		A10	A10
11	6	Orange	Red	¦	B1	B1
12			Black		B2	B2
13	7	Gray	Red		B3	B3
14			Black		B4	B4
15	8	White	Red		B5	B5
16			Black		B6	B6
17	9	Yellow	Red		B7	B7
18			Black		B8	B8
19	10	Pink	Red		B9	B9
20			Black		B10	B10

Standard wiring table (28 pin)

Wire No.	Twist No.	Wire Color	Mark Color	Marking	CN1 Pin No.	CN2 Pin No.
1	1	Orange	Red	'	A1	A1
2			Black		A2	A2
3	2	Gray	Red		A3	A3
4			Black		A4	A4
5	3	White	Red		A5	A5
6			Black		A6	A6
7	4	Yellow	Red		A7	A7
8			Black		A8	A8
9	5	Pink	Red		A9	A9
10			Black		A10	A10
11	6	Orange	Red	¦	A11	A11
12			Black		A12	A12
13	7	Gray	Red		A13	A13
14			Black		A14	A14
15	8	White	Red		B1	B1
16			Black		B2	B2
17	9	Yellow	Red		B3	B3
18			Black		B4	B4
19	10	Pink	Red		B5	B5
20			Black		B6	B6
21	11	Orange	Red	¦	B7	B7
22			Black		B8	B8
23	12	Gray	Red		B9	B9
24			Black		B10	B10
25	13	White	Red		B11	B11
26			Black		B12	B12
27	14	Yellow	Red		B13	B13
28			Black		B14	B14

Standard wiring table (34 pin)

Wire No.	Twist No.	Wire Color	Mark Color	Marking	CN1 Pin No.	CN2 Pin No.
1	1	Orange	Red	'	A1	A1
2			Black		A2	A2
3	2	Gray	Red		A3	A3
4			Black		A4	A4
5	3	White	Red		A5	A5
6			Black		A6	A6
7	4	Yellow	Red		A7	A7
8			Black		A8	A8
9	5	Pink	Red		A9	A9
10			Black		A10	A10
11	6	Orange	Red	¦	A11	A11
12			Black		A12	A12
13	7	Gray	Red		A13	A13
14			Black		A14	A14
15	8	White	Red		A15	A15
16			Black		A16	A16
17	9	Yellow	Red		A17	A17
18			Black		B1	B1
19	10	Pink	Red		B2	B2
20			Black		B3	B3
21	11	Orange	Red	¦	B4	B4
22			Black		B5	B5
23	12	Gray	Red		B6	B6
24			Black		B7	B7
25	13	White	Red		B8	B8
26			Black		B9	B9
27	14	Yellow	Red		B10	B10
28			Black		B11	B11
29	15	Pink	Red		B12	B12
30			Black		B13	B13
31	16	Orange	Red	¦	B14	B14
32			Black		B15	B15
33	17	Gray	Red		B16	B16
34			Black		B17	B17
35	18	White	Red			
36			Black			

Standard wiring table (80 pin)

Wire No.	Twist No.	Wire Color	Mark Color	Marking	CN1 Pin No.	CN2 Pin No.
1	1	Orange	Red	'	A1	A1
2			Black		A2	A2
3	2	Gray	Red		A3	A3
4			Black		A4	A4
5	3	White	Red		A5	A5
6			Black		A6	A6
7	4	Yellow	Red		A7	A7
8			Black		A8	A8
9	5	Pink	Red		A9	A9
10			Black		A10	A10
11	6	Orange	Red	¦	A11	A11
12			Black		A12	A12
13	7	Gray	Red		A13	A13
14			Black		A14	A14
15	8	White	Red		A15	A15
16			Black		A16	A16
17	9	Yellow	Red		A17	A17
18			Black		A18	A18
19	10	Pink	Red		A19	A19
20			Black		A20	A20
21	11	Orange	Red	¦	A21	A21
22			Black		A22	A22
23	12	Gray	Red		A23	A23
24			Black		A24	A24
25	13	White	Red		A25	A25
26			Black		A26	A26
27	14	Yellow	Red		A27	A27
28			Black		A28	A28
29	15	Pink	Red		A29	A29
30			Black		A30	A30
31	16	Orange	Red	¦	A31	A31
32			Black		A32	A32
33	17	Gray	Red		A33	A33
34			Black		A34	A34
35	18	White	Red		A35	A35
36			Black		A36	A36
37	19	Yellow	Red		A37	A37
38			Black		A38	A38
39	20	Pink	Red		A39	A39
40			Black		A40	A40

Wire No.	Twist No.	Wire Color	Mark Color	Marking	CN1 Pin No.	CN2 Pin No.
41	21	Orange	Red	¦ (Continuation)	B1	B1
42			Black		B2	B2
43	22	Gray	Red		B3	B3
44			Black		B4	B4
45	23	White	Red		B5	B5
46			Black		B6	B6
47	24	Yellow	Red		B7	B7
48			Black		B8	B8
49	25	Pink	Red		B9	B9
50			Black		B10	B10
51	26	Orange	Red		B11	B11
52			Black		B12	B12
53	27	Gray	Red		B13	B13
54			Black		B14	B14
55	28	White	Red		B15	B15
56			Black		B16	B16
57	29	Yellow	Red		B17	B17
58			Black		B18	B18
59	30	Pink	Red		B19	B19
60			Black		B20	B20
61	31	Orange	Red		B21	B21
62			Black		B22	B22
63	32	Gray	Red		B23	B23
64			Black		B24	B24
65	33	White	Red		B25	B25
66			Black		B26	B26
67	34	Yellow	Red		B27	B27
68			Black		B28	B28
69	35	Pink	Red		B29	B29
70			Black		B30	B30
71	36	Orange	Red		B31	B31
72			Black		B32	B32
73	37	Gray	Red		B33	B33
74			Black		B34	B34
75	38	White	Red		B35	B35
76			Black		B36	B36
77	39	Yellow	Red		B37	B37
78			Black		B38	B38
79	40	Pink	Red		B39	B39
80			Black		B40	B40

Standard wiring table (60 pin)

Wire No.	Twist No.	Wire Color	Mark Color	Marking	CN1 Pin No.	CN2 Pin No.
1	1	Orange	Red	'	A1	A1
2			Black		A2	A2
3	2	Gray	Red		A3	A3
4			Black		A4	A4
5	3	White	Red		A5	A5
6			Black		A6	A6
7	4	Yellow	Red		A7	A7
8			Black		A8	A8
9	5	Pink	Red		A9	A9
10			Black		A10	A10
11	6	Orange	Red	¦	A11	A11
12			Black		A12	A12
13	7	Gray	Red		A13	A13
14			Black		A14	A14
15	8	White	Red		A15	A15
16			Black		A16	A16
17	9	Yellow	Red		A17	A17
18			Black		A18	A18
19	10	Pink	Red		A19	A19
20			Black		A20	A20
21	11	Orange	Red	¦	A21	A21
22			Black		A22	A22
23	12	Gray	Red		A23	A23
24			Black		A24	A24
25	13	White	Red		A25	A25
26			Black		A26	A26
27	14	Yellow	Red		A27	A27
28			Black		A28	A28
29	15	Pink	Red		A29	A29
30			Black		A30	A30
31	16	Orange	Red	¦	B1	B1
32			Black		B2	B2
33	17	Gray	Red		B3	B3
34			Black		B4	B4
35	18	White	Red		B5	B5
36			Black		B6	B6
37	19	Yellow	Red		B7	B7
38			Black		B8	B8
39	20	Pink	Red		B9	B9
40			Black		B10	B10
41	21	Orange	Red	¦ (Continuation)	B11	B11
42			Black		B12	B12
43	22	Gray	Red		B13	B13
44			Black		B14	B14
45	23	White	Red		B15	B15
46			Black		B16	B16
47	24	Yellow	Red		B17	B17
48			Black		B18	B18
49	25	Pink	Red		B19	B19
50			Black		B20	B20
51	26	Orange	Red		B21	B21
52			Black		B22	B22
53	27	Gray	Red		B23	B23
54			Black		B24	B24
55	28	White	Red		B25	B25
56			Black		B26	B26
57	29	Yellow	Red		B27	B27
58			Black		B28	B28
59	30	Pink	Red		B29	B29
60			Black		B30	B30
61	31	Orange	Red			
62			Black			
63	32	Gray	Red			
64			Black			
65	33	White	Red			
66			Black			
67	34	Yellow	Red			
68			Black			

Standard wiring table (68 pin)

Wire No.	Twist No.	Wire Color	Mark Color	Marking	CN1 Pin No.	CN2 Pin No.
1	1	Orange	Red	'	A1	A1
2			Black		A2	A2
3	2	Gray	Red		A3	A3
4			Black		A4	A4
5	3	White	Red		A5	A5
6			Black		A6	A6
7	4	Yellow	Red		A7	A7
8			Black		A8	A8
9	5	Pink	Red		A9	A9
10			Black		A10	A10
11	6	Orange	Red	¦	A11	A11
12			Black		A12	A12
13	7	Gray	Red		A13	A13
14			Black		A14	A14
15	8	White	Red		A15	A15
16			Black		A16	A16
17	9	Yellow	Red		A17	A17
18			Black		A18	A18
19	10	Pink	Red		A19	A19
20			Black		A20	A20
21	11	Orange	Red	¦	A21	A21
22			Black		A22	A22
23	12	Gray	Red		A23	A23
24			Black		A24	A24
25	13	White	Red		A25	A25
26			Black		A26	A26
27	14	Yellow	Red		A27	A27
28			Black		A28	A28
29	15	Pink	Red		A29	A29
30			Black		A30	A30
31	16	Orange	Red	¦	A31	A31
32			Black		A32	A32
33	17	Gray	Red		A33	A33
34			Black		A34	A34
35	18	White	Red		B1	B1
36			Black		B2	B2
37	19	Yellow	Red		B3	B3
38			Black		B4	B4
39	20	Pink	Red		B5	B5
40			Black		B6	B6
41	21	Orange	Red	¦ (Continuation)	B7	B7
42			Black		B8	B8
43	22	Gray	Red		B9	B9
44			Black		B10	B10
45	23	White	Red		B11	B11
46			Black		B12	B12
47	24	Yellow	Red		B13	B13
48			Black		B14	B14
49	25	Pink	Red		B15	B15
50			Black		B16	B16
51	26	Orange	Red		B17	B17
52			Black		B18	B18
53	27	Gray	Red		B19	B19
54			Black		B20	B20
55	28	White	Red		B21	B21
56			Black		B22	B22
57	29	Yellow	Red		B23	B23
58			Black		B24	B24
59	30	Pink	Red		B25	B25
60			Black		B26	B26
61	31	Orange	Red		B27	B27
62			Black		B28	B28
63	32	Gray	Red		B29	B29
64			Black		B30	B30
65	33	White	Red		B31	B31
66			Black		B32	B32
67	34	Yellow	Red		B33	B33
68			Black		B34	B34

Standard wiring table (50 pin)

Wire No.	Twist No.	Wire Color	Mark Color	Marking	CN1 Pin No.	CN2 Pin No.
1	1	Orange	Red	'	A1	A1
2			Black		A2	A2
3	2	Gray	Red		A3	A3
4			Black		A4	A4
5	3	White	Red		A5	A5
6			Black		A6	A6
7	4	Yellow	Red		A7	A7
8			Black		A8	A8
9	5	Pink	Red		A9	A9
10			Black		A10	A10
11	6	Orange	Red	¦	A11	A11
12			Black		A12	A12
13	7	Gray	Red		A13	A13
14			Black		A14	A14
15	8	White	Red		A15	A15
16			Black		A16	A16
17	9	Yellow	Red		A17	A17
18			Black		A18	A18
19	10	Pink	Red		A19	A19
20			Black		A20	A20
21	11	Orange	Red	¦	A21	A21
22			Black		A22	A22
23	12	Gray	Red		A23	A23
24			Black		A24	A24
25	13	White	Red		A25	A25
26			Black		B1	B1
27	14	Yellow	Red		B2	B2
28			Black		B3	B3
29	15	Pink	Red		B4	B4
30			Black		B5	B5
31	16	Orange	Red	¦	B6	B6
32			Black		B7	B7
33	17	Gray	Red		B8	B8
34			Black		B9	B9
35	18	White	Red		B10	B10
36			Black		B11	B11
37	19	Yellow	Red		B12	B12
38			Black		B13	B13
39	20	Pink	Red		B14	B14
40			Black		B15	B15
41	21	Orange	Red	¦ (Continuation)	B16	B16
42			Black		B17	B17
43	22	Gray	Red		B18	B18
44			Black		B19	B19
45	23	White	Red		B20	B20
46			Black		B21	B21
47	24	Yellow	Red		B22	B22
48			Black		B23	B23
49	25	Pink	Red		B24	B24
50			Black		B25	B25

Standard wiring table (100 pin)

Wire No.	Twist No.	Wire Color	Mark Color	Marking	CN1 Pin No.	CN2 Pin No.
1	1	Orange	Red	'	A1	A1
2			Black		A2	A2
3	2	Gray	Red		A3	A3
4			Black		A4	A4
5	3	White	Red		A5	A5
6			Black		A6	A6
7	4	Yellow	Red		A7	A7
8			Black		A8	A8
9	5	Pink	Red		A9	A9
10			Black		A10	A10
11	6	Orange	Red	¦	A11	A11
12			Black		A12	A12
13	7	Gray	Red		A13	A13
14			Black		A14	A14
15	8	White	Red		A15	A15
16			Black		A16	A16
17	9	Yellow	Red		A17	A17
18			Black		A18	A18
19	10	Pink	Red		A19	A19
20			Black		A20	A20
21	11	Orange	Red	¦	A21	A21
22			Black		A22	A22
23	12	Gray	Red		A23	A23
24			Black		A24	A24
25	13	White	Red		A25	A25
26			Black		A26	A26
27	14	Yellow	Red		A27	A27
28			Black		A28	A28
29	15	Pink	Red		A29	A29
30			Black		A30	A30
31	16	Orange	Red	¦	A31	A31
32			Black		A32	A32
33	17	Gray	Red		A33	A33
34			Black		A34	A34
35	18	White	Red		A35	A35
36			Black		A36	A36
37	19	Yellow	Red		A37	A37
38			Black		A38	A38
39	20	Pink	Red		A39	A39
40			Black		A40	A40
41	21	Orange	Red	¦ (Continuation)	A41	A41
42			Black		A42	A42
43	22	Gray	Red		A43	A43
44			Black		A44	A44
45	23	White	Red		A45	A45
46			Black		A46	A46
47	24	Yellow	Red		A47	A47
48			Black		A48	A48
49	25	Pink	Red		A49	A49
50			Black		A50	A50

Wire No.	Twist No.	Wire Color	Mark Color	Marking	CN1 Pin No.	CN2 Pin No.
51	26	Orange	Red		B1	B1
52			Black		B2	B2
53	27	Gray	Red		B3	B3
54			Black		B4	B4
55	28	White	Red		B5	B5
56			Black		B6	B6
57	29	Yellow	Red		B7	B7
58			Black		B8	B8
59	30	Pink	Red		B9	B9
60			Black		B10	B10
61	31	Orange	Red		B11	B11
62			Black		B12	B12
63	32	Gray	Red		B13	B13
64			Black		B14	B14
65	33	White	Red		B15	B15
66			Black		B16	B16
67	34	Yellow	Red		B17	B17
68			Black		B18	B18
69	35	Pink	Red		B19	B19
70			Black		B20	B20
71	36	Orange	Red		B21	B21
72			Black		B22	B22
73	37	Gray	Red		B23	B23
74			Black		B24	B24
75	38	White	Red		B25	B25
76			Black		B26	B26
77	39	Yellow	Red		B27	B27
78			Black		B28	B28
79	40	Pink	Red		B29	B29
80			Black		B30	B30
81	41	Orange	Red		B31	B31
82			Black		B32	B32
83	42	Gray	Red		B33	B33
84			Black		B34	B34
85	43	White	Red		B35	B35
86			Black		B36	B36
87	44	Yellow	Red		B37	B37
88			Black		B38	B38
89	45	Pink	Red		B39	B39
90			Black		B40	B40
91	46	Orange	Red		B41	B41
92			Black		B42	B42
93	47	Gray	Red		B43	B43
94			Black		B44	B44
95	48	White	Red		B45	B45
96			Black		B46	B46
97	49	Yellow	Red		B47	B47
98			Black		B48	B48
99	50	Pink	Red		B49	B49
100			Black		B50	B50

*See CN1 for single wiring

8840/8855 Standard Wiring Table

Standard wiring table (20pin)

Wire No.	Twist No.	Wire Color	Mark Color	Marking	CN1 Pin No.	CN2 Pin No.
1	1	Orange	Red	'	A1	A1
2			Black		B1	B1
3	2	Gray	Red		A2	A2
4			Black		B2	B2
5	3	White	Red		A3	A3
6			Black		B3	B3
7	4	Yellow	Red		A4	A4
8			Black		B4	B4
9	5	Pink	Red		A5	A5
10			Black		B5	B5
11	6	Orange	Red	;	A6	A6
12			Black		B6	B6
13	7	Gray	Red		A7	A7
14			Black		B7	B7
15	8	White	Red		A8	A8
16			Black		B8	B8
17	9	Yellow	Red		A9	A9
18			Black		B9	B9
19	10	Pink	Red		A10	A10
20			Black		B10	B10

Semi-Standard wiring table (28 pin)

Wire No.	Twist No.	Wire Color	Mark Color	Marking	CN1 Pin No.	CN2 Pin No.
1	1	Orange	Red	'	A1	A1
2			Black		B1	B1
3	2	Gray	Red		A2	A2
4			Black		B2	B2
5	3	White	Red		A3	A3
6			Black		B3	B3
7	4	Yellow	Red		A4	A4
8			Black		B4	B4
9	5	Pink	Red		A5	A5
10			Black		B5	B5
11	6	Orange	Red	;	A6	A6
12			Black		B6	B6
13	7	Gray	Red		A7	A7
14			Black		B7	B7
15	8	White	Red		A8	A8
16			Black		B8	B8
17	9	Yellow	Red		A9	A9
18			Black		B9	B9
19	10	Pink	Red		A10	A10
20			Black		B10	B10
21	11	Orange	Red	;;	A11	A11
22			Black		B11	B11
23	12	Gray	Red		A12	A12
24			Black		B12	B12
25	13	White	Red		A13	A13
26			Black		B13	B13
27	14	Yellow	Red		A14	A14
28			Black		B14	B14

Semi-Standard wiring table (34 pin)

Wire No.	Twist No.	Wire Color	Mark Color	Marking	CN1 Pin No.	CN2 Pin No.
1	1	Orange	Red	'	A1	A1
2			Black		B1	B1
3	2	Gray	Red		A2	A2
4			Black		B2	B2
5	3	White	Red		A3	A3
6			Black		B3	B3
7	4	Yellow	Red		A4	A4
8			Black		B4	B4
9	5	Pink	Red		A5	A5
10			Black		B5	B5
11	6	Orange	Red	;	A6	A6
12			Black		B6	B6
13	7	Gray	Red		A7	A7
14			Black		B7	B7
15	8	White	Red		A8	A8
16			Black		B8	B8
17	9	Yellow	Red		A9	A9
18			Black		B9	B9
19	10	Pink	Red		A10	A10
20			Black		B10	B10
21	11	Orange	Red	;;	A11	A11
22			Black		B11	B11
23	12	Gray	Red		A12	A12
24			Black		B12	B12
25	13	White	Red		A13	A13
26			Black		B13	B13
27	14	Yellow	Red		A14	A14
28			Black		B14	B14
29	15	Pink	Red		A15	A15
30			Black		B15	B15
31	16	Orange	Red	;;;	A16	A16
32			Black		B16	B16
33	17	Gray	Red		A17	A17
34			Black		B17	B17
35	18	White	Red		A18	A18
36			Black		B18	B18

Semi-Standard wiring table (80 pin)

Wire No.	Twist No.	Wire Color	Mark Color	Marking	CN1 Pin No.	CN2 Pin No.
1	1	Orange	Red	'	A1	A1
2			Black		B1	B1
3	2	Gray	Red		A2	A2
4			Black		B2	B2
5	3	White	Red		A3	A3
6			Black		B3	B3
7	4	Yellow	Red		A4	A4
8			Black		B4	B4
9	5	Pink	Red		A5	A5
10			Black		B5	B5
11	6	Orange	Red	;	A6	A6
12			Black		B6	B6
13	7	Gray	Red		A7	A7
14			Black		B7	B7
15	8	White	Red		A8	A8
16			Black		B8	B8
17	9	Yellow	Red		A9	A9
18			Black		B9	B9
19	10	Pink	Red		A10	A10
20			Black		B10	B10
21	11	Orange	Red	;;	A11	A11
22			Black		B11	B11
23	12	Gray	Red		A12	A12
24			Black		B12	B12
25	13	White	Red		A13	A13
26			Black		B13	B13
27	14	Yellow	Red		A14	A14
28			Black		B14	B14
29	15	Pink	Red		A15	A15
30			Black		B15	B15
31	16	Orange	Red	;;;	A16	A16
32			Black		B16	B16
33	17	Gray	Red		A17	A17
34			Black		B17	B17
35	18	White	Red		A18	A18
36			Black		B18	B18
37	19	Yellow	Red		A19	A19
38			Black		B19	B19
39	20	Pink	Red		A20	A20
40			Black		B20	B20
41	21	Orange	Red	------ (Continuation)	A21	A21
42			Black		B21	B21
43	22	Gray	Red		A22	A22
44			Black		B22	B22
45	23	White	Red		A23	A23
46			Black		B23	B23
47	24	Yellow	Red		A24	A24
48			Black		B24	B24
49	25	Pink	Red		A25	A25
50			Black		B25	B25
51	26	Orange	Red	|	A26	A26
52			Black		B26	B26
53	27	Gray	Red		A27	A27
54			Black		B27	B27
55	28	White	Red		A28	A28
56			Black		B28	B28
57	29	Yellow	Red		A29	A29
58			Black		B29	B29
59	30	Pink	Red		A30	A30
60			Black		B30	B30
61	31	Orange	Red	|	A31	A31
62			Black	|	B31	B31
63	32	Gray	Red		A32	A32
64			Black		B32	B32
65	33	White	Red		A33	A33
66			Black		B33	B33
67	34	Yellow	Red		A34	A34
68			Black		B34	B34

Semi-Standard wiring table (60 pin)

Wire No.	Twist No.	Wire Color	Mark Color	Marking	CN1 Pin No.	CN2 Pin No.
1	1	Orange	Red	'	A1	A1
2			Black		B1	B1
3	2	Gray	Red		A2	A2
4			Black		B2	B2
5	3	White	Red		A3	A3
6			Black		B3	B3
7	4	Yellow	Red		A4	A4
8			Black		B4	B4
9	5	Pink	Red		A5	A5
10			Black		B5	B5
11	6	Orange	Red	;	A6	A6
12			Black		B6	B6
13	7	Gray	Red		A7	A7
14			Black		B7	B7
15	8	White	Red		A8	A8
16			Black		B8	B8
17	9	Yellow	Red		A9	A9
18			Black		B9	B9
19	10	Pink	Red		A10	A10
20			Black		B10	B10
21	11	Orange	Red	;;	A11	A11
22			Black		B11	B11
23	12	Gray	Red		A12	A12
24			Black		B12	B12
25	13	White	Red		A13	A13
26			Black		B13	B13
27	14	Yellow	Red		A14	A14
28			Black		B14	B14
29	15	Pink	Red		A15	A15
30			Black		B15	B15
31	16	Orange	Red	;;;	A16	A16
32			Black		B16	B16
33	17	Gray	Red		A17	A17
34			Black		B17	B17
35	18	White	Red		A18	A18
36			Black		B18	B18
37	19	Yellow	Red		A19	A19
38			Black		B19	B19
39	20	Pink	Red		A20	A20
40			Black		B20	B20
41	21	Orange	Red	------ (Continuation)	A21	A21
42			Black		B21	B21
43	22	Gray	Red		A22	A22
44			Black		B22	B22
45	23	White	Red		A23	A23
46			Black		B23	B23
47	24	Yellow	Red		A24	A24
48			Black		B24	B24
49	25	Pink	Red		A25	A25
50			Black		B25	B25
51	26	Orange	Red	|	A26	A26
52			Black		B26	B26
53	27	Gray	Red		A27	A27
54			Black		B27	B27
55	28	White	Red		A28	A28
56			Black		B28	B28
57	29	Yellow	Red		A29	A29
58			Black		B29	B29
59	30	Pink	Red		A30	A30
60			Black		B30	B30
61	31	Orange	Red	|	A31	A31
62			Black	|	B31	B31
63	32	Gray	Red		A32	A32
64			Black		B32	B32
65	33	White	Red		A33	A33
66			Black		B33	B33
67	34	Yellow	Red		A34	A34
68			Black		B34	B34

Semi-Standard wiring table (68 pin)

Wire No.	Twist No.	Wire Color	Mark Color	Marking	CN1 Pin No.	CN2 Pin No.
1	1	Orange	Red	'	A1	A1
2			Black		B1	B1
3	2	Gray	Red		A2	A2
4			Black		B2	B2
5	3	White	Red		A3	A3
6			Black		B3	B3
7	4	Yellow	Red		A4	A4
8			Black		B4	B4
9	5	Pink	Red		A5	A5
10			Black		B5	B5
11	6	Orange	Red	;	A6	A6
12			Black		B6	B6
13	7	Gray	Red		A7	A7
14			Black		B7	B7
15	8	White	Red		A8	A8
16			Black		B8	B8
17	9	Yellow	Red		A9	A9
18			Black		B9	B9
19	10	Pink	Red		A10	A10
20			Black		B10	B10
21	11	Orange	Red	;;	A11	A11
22			Black		B11	B11
23	12	Gray	Red		A12	A12
24			Black		B12	B12
25	13	White	Red		A13	A13
26			Black		B13	B13
27	14	Yellow	Red		A14	A14
28			Black		B14	B14
29	15	Pink	Red		A15	A15
30			Black		B15	B15
31	16	Orange	Red	;;;	A16	A16
32			Black		B16	B16
33	17	Gray	Red		A17	A17
34			Black		B17	B17
35	18	White	Red		A18	A18
36			Black		B18	B18
37	19	Yellow	Red		A19	A19
38			Black		B19	B19
39	20	Pink	Red		A20	A20
40			Black		B20	B20
41	21	Orange	Red	------ (Continuation)	A21	A21
42			Black		B21	B21
43	22	Gray	Red		A22	A22
44			Black		B22	B22
45	23	White	Red		A23	A23
46			Black		B23	B23
47	24	Yellow	Red		A24	A24
48			Black		B24	B24
49	25	Pink	Red		A25	A25
50			Black		B25	B25
51	26	Orange	Red	|	A26	A26
52			Black		B26	B26
53	27	Gray	Red		A27	A27
54			Black		B27	B27
55	28	White	Red		A28	A28
56			Black		B28	B28
57	29	Yellow	Red		A29	A29
58			Black		B29	B29
59	30	Pink	Red		A30	A30
60			Black		B30	B30
61	31	Orange	Red	|	A31	A31
62			Black	|	B31	B31
63	32	Gray	Red		A32	A32
64			Black		B32	B32
65	33	White	Red		A33	A33
66			Black		B33	B33
67	34	Yellow	Red		A34	A34
68			Black		B34	B34

Semi-Standard wiring table (50 pin)

Wire No.	Twist No.	Wire Color	Mark Color	Marking	CN1 Pin No.	CN2 Pin No.
1	1	Orange	Red	'	A1	A1
2			Black		B1	B1
3	2	Gray	Red		A2	A2
4			Black		B2	B2
5	3	White	Red		A3	A3
6			Black		B3	B3
7	4	Yellow	Red		A4	A4
8			Black		B4	B4
9	5	Pink	Red		A5	A5
10			Black		B5	B5
11	6	Orange	Red	;	A6	A6
12			Black		B6	B6
13	7	Gray	Red		A7	A7
14			Black		B7	B7
15	8	White	Red		A8	A8
16			Black		B8	B8
17	9	Yellow	Red		A9	A9
18			Black		B9	B9
19	10	Pink	Red		A10	A10
20			Black		B10	B10
21	11	Orange	Red	;;	A11	A11
22			Black		B11	B11
23	12	Gray	Red		A12	A12
24			Black		B12	B12
25	13	White	Red		A13	A13
26			Black		B13	B13
27	14	Yellow	Red		A14	A14
28			Black		B14	B14
29	15	Pink	Red		A15	A15
30			Black		B15	B15
31	16	Orange	Red	;;;	A16	A16
32			Black		B16	B16
33	17	Gray	Red		A17	A17
34			Black		B17	B17
35	18	White	Red		A18	A18
36			Black		B18	B18
37	19	Yellow	Red		A19	A19
38			Black		B19	B19
39	20	Pink	Red		A20	A20
40			Black		B20	B20
41	21	Orange	Red	------ (Continuation)	A21	A21
42			Black		B21	B21
43	22	Gray	Red		A22	A22
44			Black		B22	B22
45	23	White	Red		A23	A23
46			Black		B23	B23
47	24	Yellow	Red		A24	A24
48			Black		B24	B24
49	25	Pink	Red		A25	A25
50			Black		B25	B25

Semi-Standard wiring table (100 pin)

Wire No.	Twist No.	Wire Color	Mark Color	Marking	CN1 Pin No.	CN2 Pin No.
1	1	Orange	Red	'	A1	A1
2			Black		B1	B1
3	2	Gray	Red		A2	A2
4			Black		B2	B2
5	3	White	Red		A3	A3
6			Black		B3	B3
7	4	Yellow	Red		A4	A4
8			Black		B4	B4
9	5	Pink	Red		A5	A5
10			Black		B5	B5
11	6	Orange	Red	;	A6	A6
12			Black		B6	B6
13	7	Gray	Red		A7	A7
14			Black		B7	B7
15	8	White	Red		A8	A8
16			Black		B8	B8
17	9	Yellow	Red		A9	A9
18			Black		B9	B9
19	10	Pink	Red		A10	A10
20			Black		B10	B10
21	11	Orange	Red	;;	A11	A11
22			Black		B11	B11
23	12	Gray	Red		A12	A12
24			Black		B12	B12
25	13	White	Red		A13	A13
26			Black		B13	B13
27	14	Yellow	Red		A14	A14
28			Black		B14	B14
29	15	Pink	Red		A15	A15
30			Black		B15	B15
31	16	Orange	Red	;;;	A16	A16
32			Black		B16	B16
33	17	Gray	Red		A17	A17
34			Black		B17	B17
35	18	White	Red		A18	A18
36			Black		B18	B18
37	19	Yellow	Red		A19	A19
38			Black		B19	B19
39	20	Pink	Red		A20	A20
40			Black		B20	B20
41	21	Orange	Red	------ (Continuation)	A21	A21
42			Black		B21	B21
43	22	Gray	Red		A22	A22
44			Black		B22	B22
45	23	White	Red		A23	A23
46			Black		B23	B23
47	24	Yellow	Red		A24	A24
48			Black		B24	B24
49	25	Pink	Red		A25	A25
50			Black		B25	B25
51	26	Orange	Red	|	A26	A26
52			Black		B26	B26
53	27	Gray	Red		A27	A27
54			Black		B27	B27
55	28	White	Red		A28	A28
56			Black		B28	B28
57	29	Yellow	Red		A29	A29
58			Black		B29	B29
59	30	Pink	Red		A30	A30
60			Black		B30	B30
61	31	Orange	Red	|	A31	A31
62			Black	|	B31	B31
63	32	Gray	Red		A32	A32
64			Black		B32	B32
65	33	White	Red		A33	A33
66			Black		B33	B33
67	34	Yellow	Red		A34	A34
68			Black		B34	B34
69	35	Pink	Red		A35	A35
70			Black		B35	B35
71	36	Orange	Red	|	A36	A36
72			Black	|	B36	B36
73	37	Gray	Red	|	A37	A37
74			Black		B37	B37
75	38	White	Red		A38	A38
76			Black		B38	B38
77	39	Yellow	Red		A39	A39
78			Black		B39	B39
79	40	Pink	Red		A40	A40
80			Black		B40	B40
81	41	Orange	Red	|	A41	A41
82			Black	|	B41	B41
83	42	Gray	Red	|	A42	A42
84			Black	|	B42	B42
85	43	White	Red		A43	A43
86			Black		B43	B43
87	44	Yellow	Red		A44	A44
88			Black		B44	B44
89	45	Pink	Red		A45	A45
90			Black		B45	B45
91	46	Orange	Red	|	A46	A46
92			Black	|	B46	B46
93	47	Gray	Red	|	A47	A47
94			Black	|	B47	B47
95	48	White	Red		A48	A48
96			Black		B48	B48
97	49	Yellow	Red		A49	A49
98			Black		B49	B49
99	50	Pink	Red		A50	A50
100			Black		B50	B50

*See CN1 for single wiring

CABLE ASSEMBLY TOOLS

CA-10-1 Cable assembly base for discrete wire

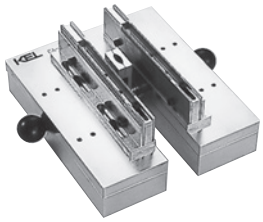

Base for use with pusher and combs

CA-10-2 Pusher

For pressing discrete wires in CA-10-3 and CA-10-4 comb.

CA-10-4(for ϕ 0.62) Comb

Aligns discrete wires in cover of the connector

CA-30 Cable assembly base for laminated wire

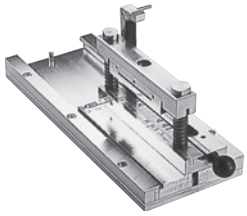

Press laminated cable into the cover of the connector.

LF-30-1 Locating Fixture

Terminates 8840/55 to laminated or discrete wire.

LF-30-2 Guide

Positions 8840 for terminartion

LF-30-3 Guide

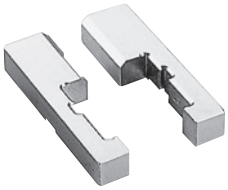

Positions 8855 for terminartion

LF-30-4 Seating platen

Applies pressure for termination of 8840/55

◆Assembly tool combination

Series \ Jig		Hand press	Cable assembly base	Pusher	Comb	Locating fixture	Guide	Seating platen	Option
8840 Series (Receptacle)	Discrete wire cable	HP-12	CA-10-1	CA-10-2	CA-10-3 CA-10-4*	LF-30-1	LF-30-2	LF-30-4	ST-10 Sliding base
	Laminated cable		Cable assembly base for laminated wire CA-30						
8855 Series (Cable plug)	Discrete wire cable		CA-10-A	CA-10-2	CA-10-3 CA-10-4*		LF-30-3		
	Laminated cable		Cable assembly base for laminated wire CA-30						

(Notice)When you want to use discrete wire, you need the additional cable cutter (CT-14)

*CA-10-3:For #28 AWG, CA-10-4:For #30 AWG

OPTIONAL TOOLING

HP-12 Hand press

ST 10 Sliding base

Sliding base increases output for all types of 8840/55 assemblies, and can be used with all assembly tooling in HP-12 press.

CT-14 Cutting jig

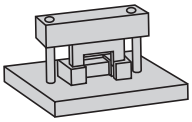

IC CONNECTORS & SWITCHES

- SIC01 SERIES
- ICC05 SERIES
- DM03/04 SERIES
- ISC SERIES
- KDS SERIES
- DSP SERIES

B.C.E. S.r.l. Via Regina Pacis, 54/c - I 41049 Sassuolo (MO)
Tel.: (+39) 0536 811616 - Fax.: (+39) 0536 811500
e-mail: bce@bce.it - Website: www.bce.it

SIC01 SERIES
SHRINK IC CONNECTOR

RoHS Compliant

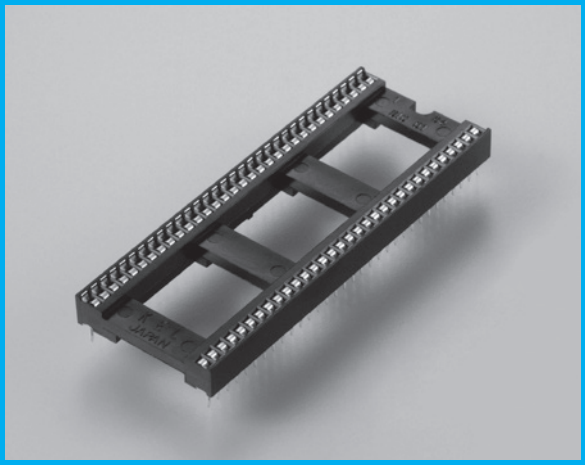

FEATURES

- 70mil(1.778mm) shrink IC connector.
- Highly-reliable design with two-sided contacts and pre-load configuration in order to assure stable and consistent connection.
- Possible densification of the pattern correspond to through hole diameter ϕ0.6mm(ϕ0.024").
- Low profile 4.6mm(0.181").
- Closed bottom design to prevent solder wicking.
- Anti-wicking flux type is available.

ORDER CODE

SIC01-□□□-361T□-F

① ② ③ ④ ⑤

*Please order in multiples of the quantity per package.

①	【Series name】 SIC01
②	【Number of contacts】 028 : 28pin 040 : 40pin 042 : 42pin 056 : 56pin 064 : 64pin
③	【Contact name】 361
④	【Anti-wicking flux】 T : Standard TP : Anti-wicking flux type
⑤	【RoHS】 F : RoHS compliant

ORDER CODE

SIC01-064-361G

① ② ③ ④

*Please order in multiples of the quantity per package.

①	【Series name】 SIC01
②	【Number of contacts】 064 : 64pin
③	【Contact name】 361
④	【Contact plating】 G : Gold plating (RoHS compliant)

SPECIFICATIONS

Material and plating		Electrical Characteristics	
Insulator material	[Standard Type] Glass-filled PBT(UL94V-0) [Skelton Type] PES (UL94V-0)	Current rating	1A per contact
		Contact resistance	20mΩ max.
Contact material	Copper alloy	Dielectric withstanding voltage	800V AC for 1minute
		Insulation resistance	5000MΩ min. at 500V DC
Contact plating	[361T□-F] Pure tin over Nickel [361G-□] Pure tin over Nickel	Insertion force	4.45N max./pin
		Withdrawal force	0.139N min.max./pin
		Operating temperature	-20°C to +70°C

About chemical resistance(Flux, cleaning riquids etc) , please contact your local KEL sales office.

SIC01-□□□-361T□-F

Unit : mm(inch)

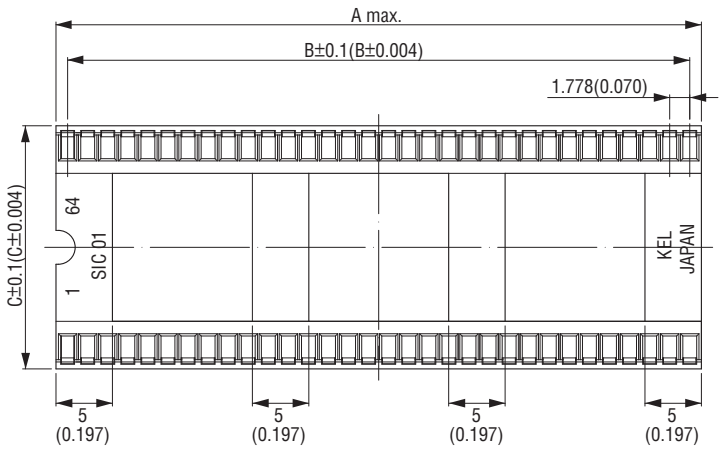

Printed Circuit Board Layout (Component Side View)

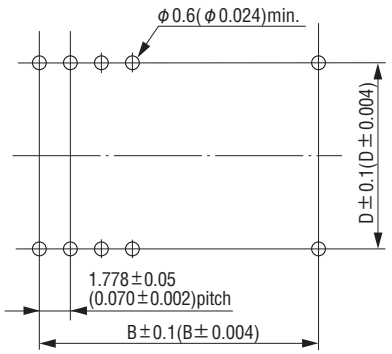

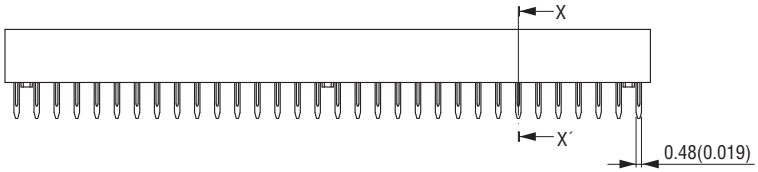

Cross Section

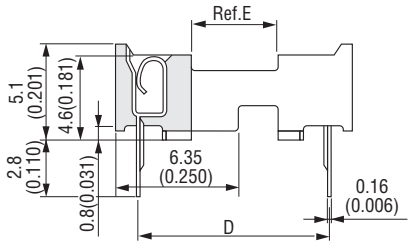

Packaging style
Pipe

Product Table / Dimensions

No. of contacts	Part Number	A	B	C	D	E	Number of packaging
28	SIC01-028-361T□-F	25.17 (0.991)	23.114 (0.910)	12.65 (0.498)	10.16 (0.400)	4.22 (0.166)	20
40	SIC01-040-361T□-F	35.84 (1.411)	33.782 (1.330)	17.73 (0.698)	15.24 (0.600)	9.30 (0.366)	14
42	SIC01-042-361T□-F	37.62 (1.481)	35.560 (1.400)	17.73 (0.698)	15.24 (0.600)	9.30 (0.366)	13
56	SIC01-056-361T□-F	50.07 (1.971)	48.006 (1.890)	17.73 (0.698)	15.24 (0.600)	9.30 (0.366)	10
64	SIC01-064-361T□-F	57.18 (2.251)	55.118 (2,170)	21.54 (0.848)	19.05 (0.750)	13.11 (0.516)	8

B.C.E. S.r.l. Via Regina Pacis, 54/c - I 41049 Sassuolo (MO) Tel.: (+39) 0536 811616 - Fax.: (+39) 0536 811500 e-mail: bce@bce.it - Website: www.bce.it

ICC05 SERIES
DUAL INLINE CONNECTOR

RoHS Compliant

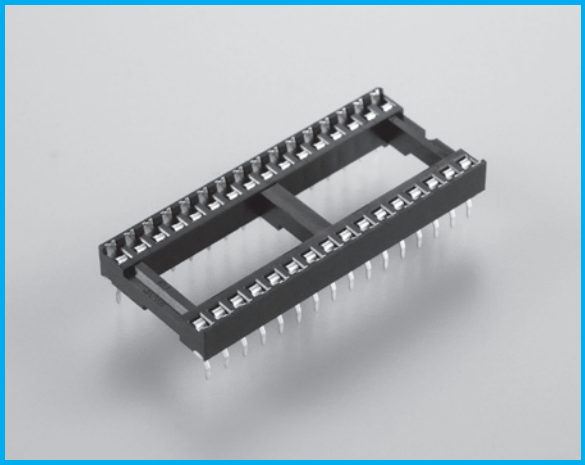

FEATURES

- Low profile 4.4mm(0.173").
- Highly-reliable design with two-sided contacts and pre-load configuration in order to assure stable and consistent connection.
- Closed bottom design to prevent solder wicking.
- Kinked tails prevent lifting during soldering .
- Anti-wicking flux type available.

ORDER CODE

ICC05-□□□-360 T□-F

① ② ③ ④ ⑤

*Please order in multiples of the quantity per package.

①	【Series name】 ICC05
②	【Number of contacts】 008 : 8pin 014 : 14pin 016 : 16pin 018 : 18pin 020 : 20pin 022 : 22pin 024 : 24pin 028 : 28pin 032 : 32pin 040 : 40pin 042 : 42pin
③	【Contact name】 360
④	【Anti-wicking flux】 T : Standard TP : Anti-wicking flux type
⑤	【RoHS】 F : RoHS compliant

ORDER CODE

ICC05-□□□-360 G□

① ② ③ ④ ⑤

*Please order in multiples of the quantity per package.

①	【Series name】 ICC05
②	【Number of contacts】 008 : 8pin 014 : 14pin 016 : 16pin 018 : 18pin 020 : 20pin 022 : 22pin 024 : 24pin 028 : 28pin 032 : 32pin 040 : 40pin 042 : 42pin
③	【Contact name】 360
④	【Contact plating】 G : Gold plating (RoHS compliant)
⑤	【Anti-wicking flux】 Omit : Standard P : Anti-wicking flux type

SPECIFICATIONS

Material and plating	
Insulator material	Glass-filled PBT(UL94V-0)
Contact material	Copper alloy
Contact plating	[360T□-F] Pure tin over Nickel [360G□] Gold over Nickel

Electrical Characteristics	
Current rating	1A per contact
Contact resistance	20mΩ max.
Dielectric withstanding voltage	1,000V AC for 1minute
Insulation resistance	5000MΩ min. at 500V DC
Insertion force	4.45N max./pin
Withdrawal force	0.139N min./ pin
Operating temperature	-20°C to +70°C

ICC05-□□□-360□□-□

Unit : mm(inch)

8,14,16,18,20,22pin

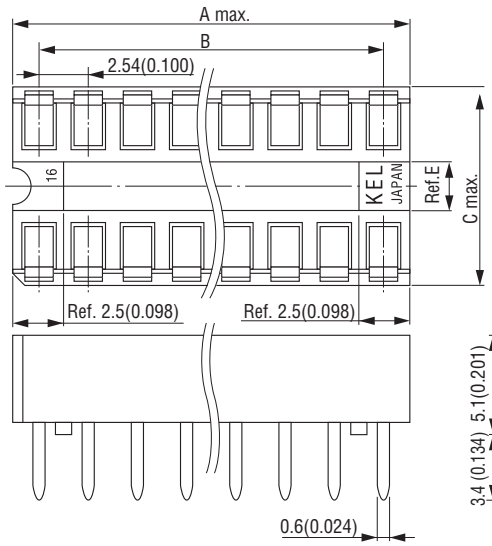

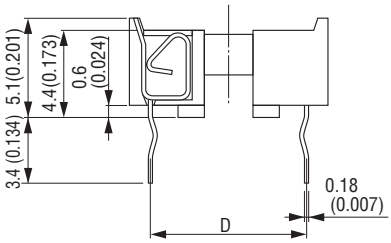

Printed Circuit Board Layout (Component Side View)

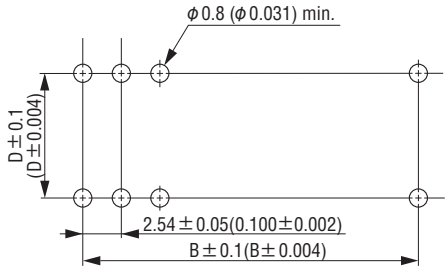

Insulator Configuration

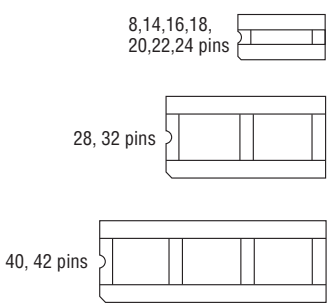

24,28,32,40,42pin

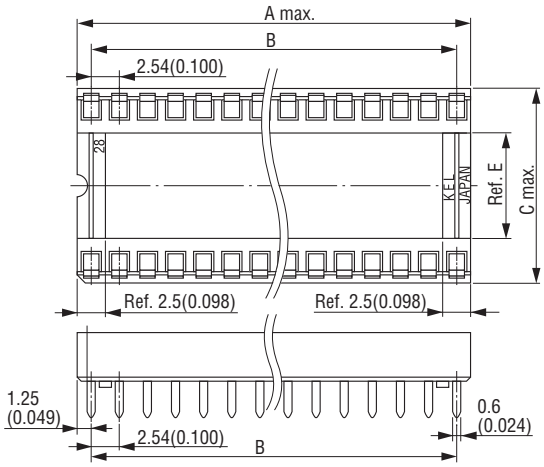

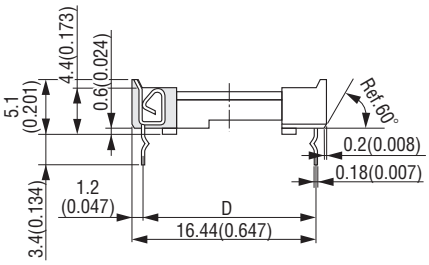

Packaging style
Pipe

Product Table / Dimensions

No. of contacts	Part Number	A	B	C	D	(E)	Number of packaging
8	ICC05-008-360□□-□	10.16 (0.400)	7.62 (0.300)	10.16 (0.400)	7.62 (0.300)	2.6 (0.102)	50
14	ICC05-014-360□□-□	17.78 (0.700)	15.24 (0.600)	10.16 (0.400)	7.62 (0.300)	2.6 (0.102)	28
16	ICC05-016-360□□-□	20.32 (0.800)	17.78 (0.700)	10.16 (0.400)	7.62 (0.300)	2.6 (0.102)	25
18	ICC05-018-360□□-□	22.86 (0.900)	20.32 (0.800)	10.16 (0.400)	7.62 (0.300)	2.6 (0.102)	22
20	ICC05-020-360□□-□	25.40 (1.000)	22.86 (0.900)	10.16 (0.400)	7.62 (0.300)	2.6 (0.102)	20
22	ICC05-022-360□□-□	27.94 (1.100)	25.40 (1.000)	12.70 (0.500)	10.16 (0.400)	4.7 (0.185)	18
24	ICC05-024-360□□-□	30.48 (1.200)	27.94 (1.100)	17.68 (0.700)	15.24 (0.600)	9.4 (0.370)	16
28	ICC05-028-360□□-□	35.56 (1.400)	33.02 (1.300)	17.68 (0.700)	15.24 (0.600)	9.4 (0.370)	14
32	ICC05-032-360□□-□	40.64 (1.600)	38.10 (1.500)	17.68 (0.700)	15.24 (0.600)	9.4 (0.370)	12
40	ICC05-040-360□□-□	50.80 (2.000)	48.26 (1.900)	17.68 (0.700)	15.24 (0.600)	9.4 (0.370)	10
42	ICC05-042-360□□-□	53.34 (2.100)	50.80 (2.000)	17.68 (0.700)	15.24 (0.600)	9.4 (0.370)	9

B.C.E. S.r.l. Via Regina Pacis, 54/c - I 41049 Sassuolo (MO) Tel.: (+39) 0536 811616 - Fax.: (+39) 0536 811500 e-mail: bce@bce.it - Website: www.bce.it

DM03/04 SERIES

SO-DIMM CONNECTOR

RoHS Compliant

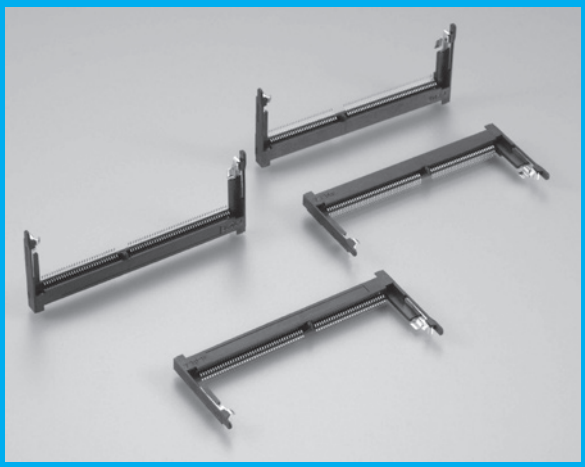

FEATURES

- Conforms to JEDEC standards.
- Easy insertion and withdrawal of Memory Module Board.
- Metal latches are highly reliable.
- TSOP DRAM or other components can be mounted beneath DM03/04 series.

ORDER CODE

DM0□-144 B□-F

① ② ③ ④ ⑤

*Please order in multiples of the quantity per package.

①	【Type】 DM03 : 4.0mm(0.157") for mounted height DM04 : 5.2mm(0.205") for mounted height
②	【Number of contacts】 144 : 144pin
③	【Contact plating】 B : Gold plating
④	【Key type】 1 : For 5.0V 2 : For 3.3V
⑤	【RoHS】 F : RoHS compliant

SPECIFICATIONS

Material and plating		Electrical Characteristics	
Insulator material	Glass-filled LCP(UL94V-0)	Current rating	0.5A per contact
Contact material	Copper alloy	Contact resistance	50mΩ max.
Contact plating	Gold over Nickel	Dielectric withstanding voltage	250V AC for 1 minute
Retention clip material	Copper alloy	Insulation resistance	500MΩ min. at 250V DC
Retention clip plating	Tin copper over Nickel	Operating temperature	-55°C to +85°C

Recommended Memory Module Board Layout

Unit : mm(inch)

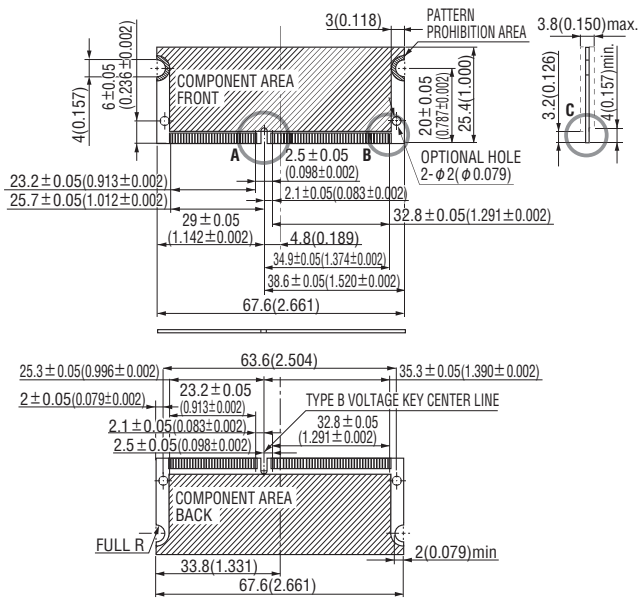

Finish for recommended contact pad
Gold plating(0.76μm min.) over Nickel Plating(2μm min.)

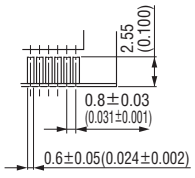

"B"detail

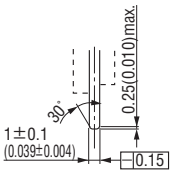

"C"detail

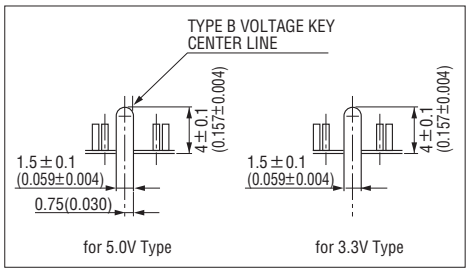

"A"detail

DM0□-144B□-F

Unit : mm(inch)

Printed Circuit Board Layout (Component Side View)

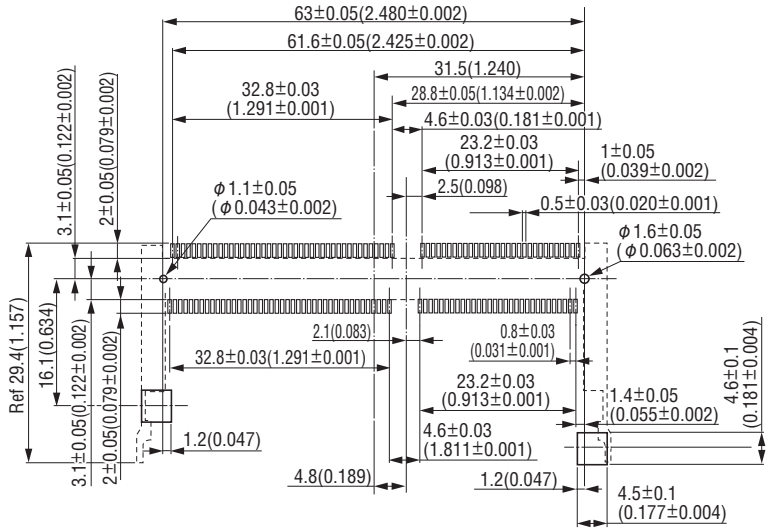

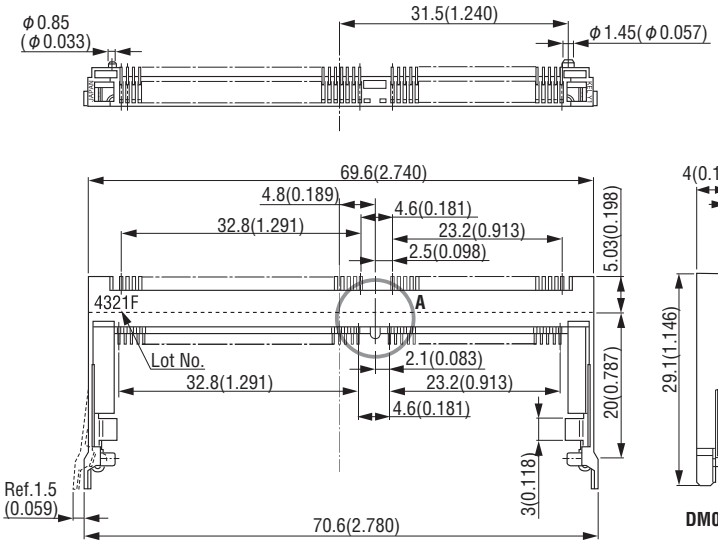

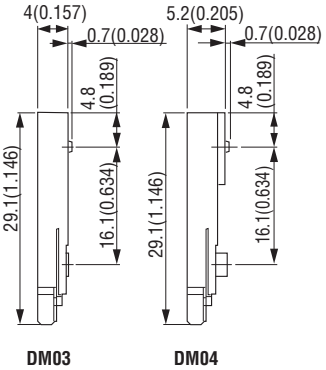

X-X′Cross Section

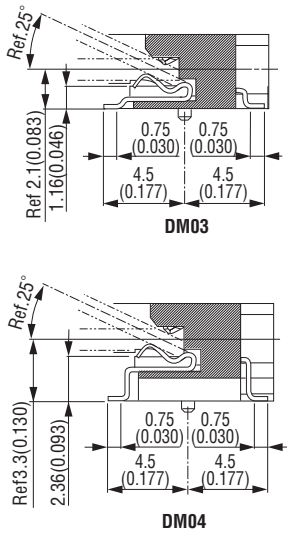

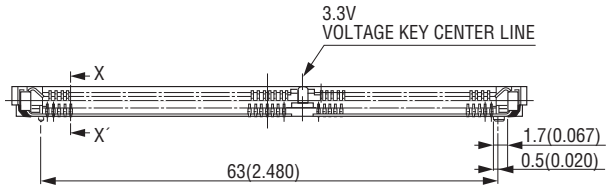

DM03

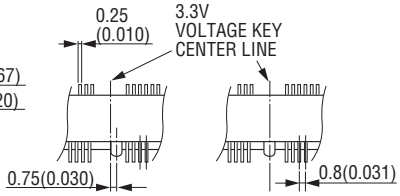

DM0□-144B1-F DM0□-144B2-F

"A"detail

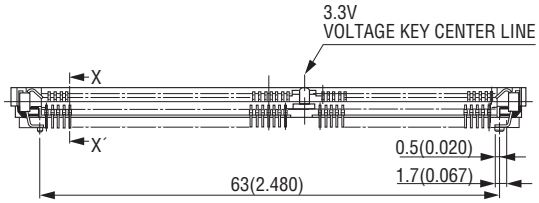

DM04

Packaging style
Tray

Product Table

No. of contacts	Part Number	Number of packaging
144	DM03-144B□-F	20
144	DM04-144B□-F	20

ISC SERIES

ISO IC CARD(SMART CARD) CONNECTOR / LANDING CONTACT TYPE

RoHS Compliant

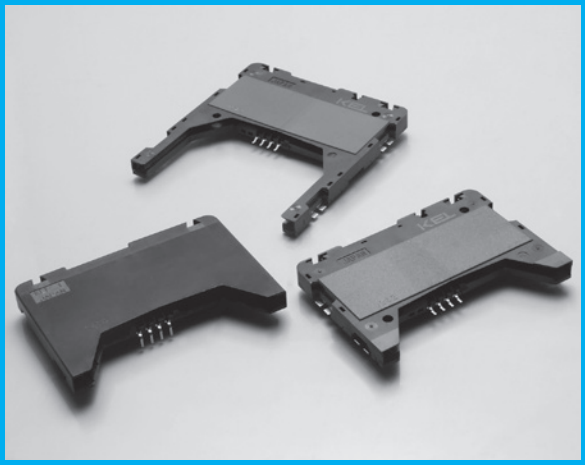

FEATURES

- Conforms to ISO/IEC7816 standard.
- Simple strcuture, consisting only few components.
- Original"Seesaw"contact design.
- Low profiele with 5.3mm (0.209´´) height.
- With card detection switch.
- High durability for IC card insertion/withdrawal. (200,000 times min. guaranty)
- ISC3 series :SMT type, ISC5 series: DIP type.
- With positioning posts and retention clips.

ORDER CODE

ISC□-08□-□F

① ② ③ ④ ⑤

*Please order in multiples of the quantity per package.

①	【Type】 ISC3 : SMT ISC5 : Through hole
②	【Number of contacts】 08 : 8pin
③	【Guide type】 S : Short L : Long (Only ISC3)
④	【Option】 Omit : Standard type 5 : Strengthening guide type (Only ISC3)
⑤	【RoHS】 F : RoHS compliant

Short guide type ISC connectors are only available with an option of strengthening guide type (ISC3-08S-5F).

SPECIFICATIONS

Material and plating	
Insulator material	[ISC3](Base)Glass-filled LCP (UL94V-0), Black (Cover)Glass-filled PPS (UL94V-0), Black [ISC5] Glass-filled PBT (UL94V-0), Black
Contact material	Copper alloy
Contact plating	Gold over Nickel
Detection switch material	Copper alloy
Detection switch plating	Gold over Nickel
Retention clip material	[ISC3]Copper alloy
Retention Clip plating	[ISC3]Gold over Nickel

Electrical Characteristics	
Current rating	(Contact)1A per contact (Detection switch)1mA to 50mA (20V max.)
Contact resistance	(Contact)40mΩ max. (Detection switch)100mΩ max.
Dielectric withstanding voltage	[ISC3]1,000V AC for 1 minute [ISC5]650V AC for 1 minute
Insulation resistance	1000MΩ min. at 500V DC
Operating temperature	[ISC3]-55°C to +105°C [ISC5]-40°C to +85°C

"SEESAW"CONTACT CONCEPT

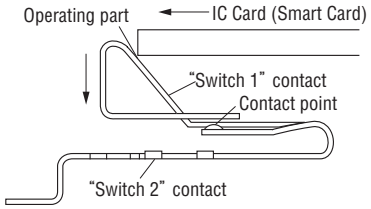

Switch contact

The detection switch is activated by the complete insertion of the IC card.When an IC card is inserted, the contact is pushed down and engages with another contact, which completes the circuit and powers up the IC card.The contact point is recessed and hence protected from dust and other contamination, preventing circuit-switching failures.

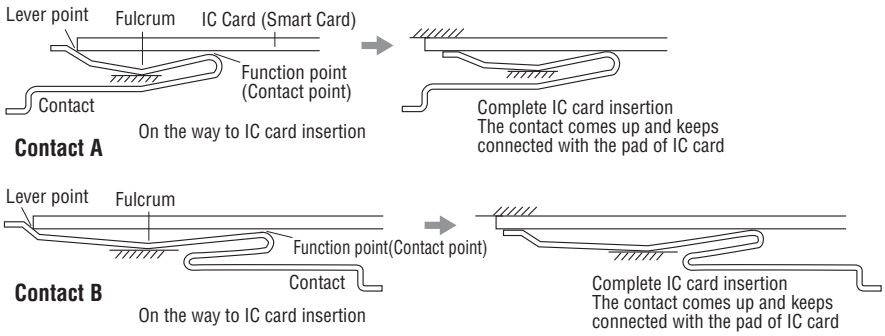

ISC series is composed of a combination of Contact A(outside) and Contact B(inside).
In the case of incomplete insertion or partial withdrawal of an IC card, the contacts do not touch the IC card.When the edge of the IC card reaches the lever points, the contact points lift and touches the IC card pad area with a short wiping action.This feature is a unique KEL concept.

ISC3-08L-F (SMT, Long guide type)

Unit : mm(inch)

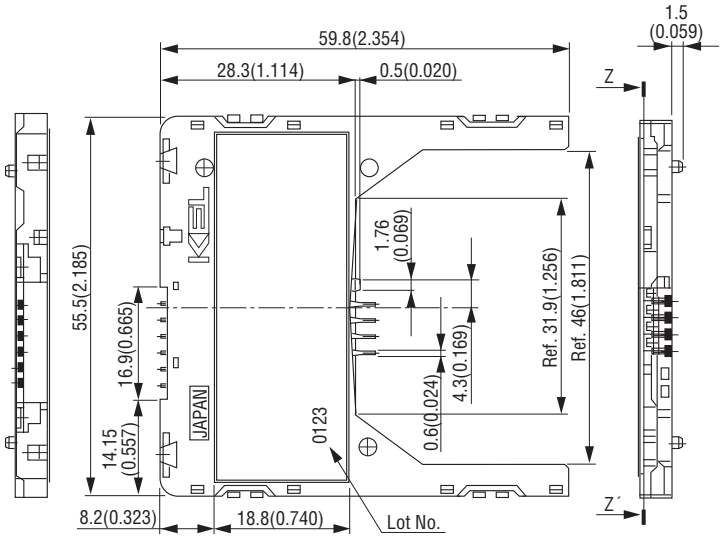

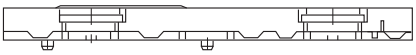

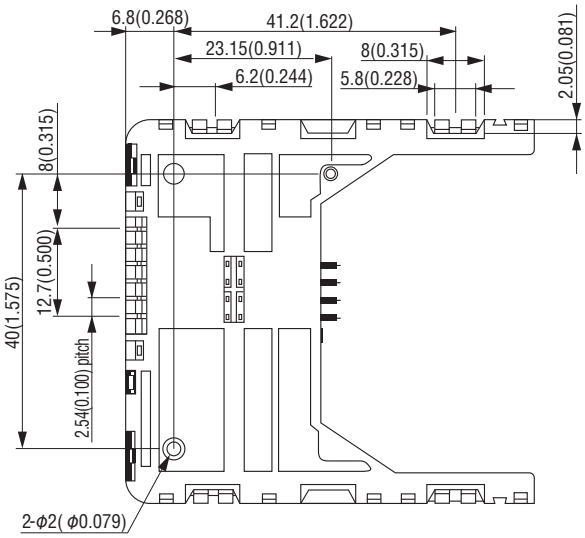

Printed Circuit Board Layout (Component Side View)

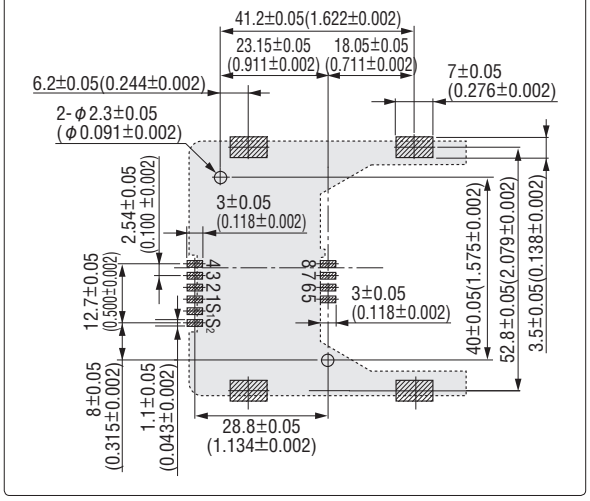

X-X´Cross Section

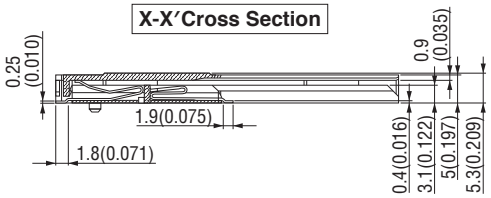

Y-Y´Cross Section

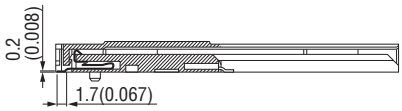

Z-Z´Cross Section

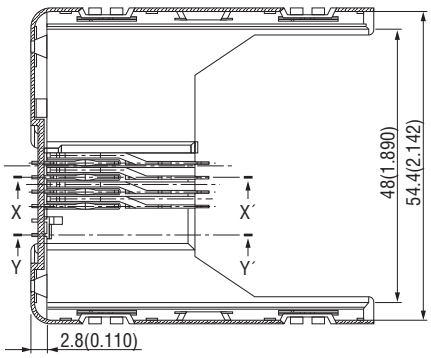

Packaging style
Tray

Product Table

No. of contacts	Part Number	Number of packaging
8	ISC3-08L-F	9

ISC3-08S-5F (SMT, Strengthning guide type)

Unit : mm(inch)

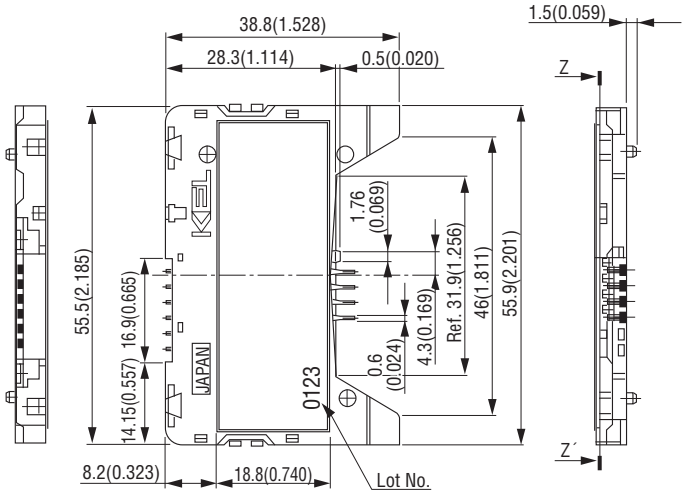

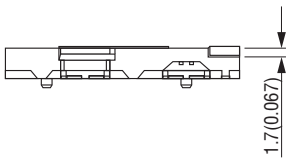

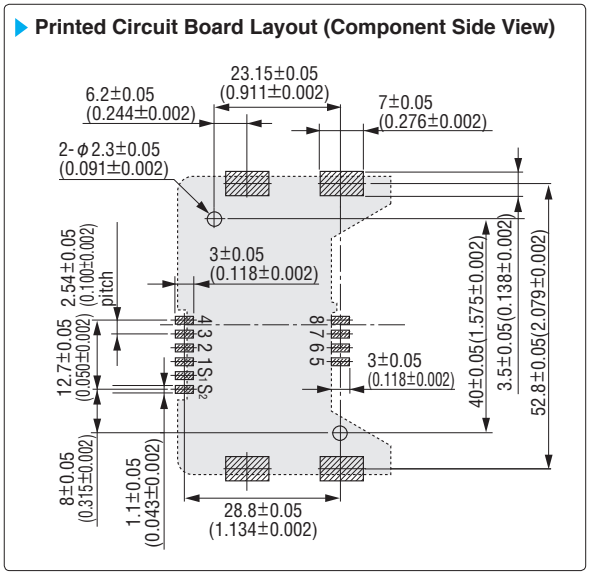

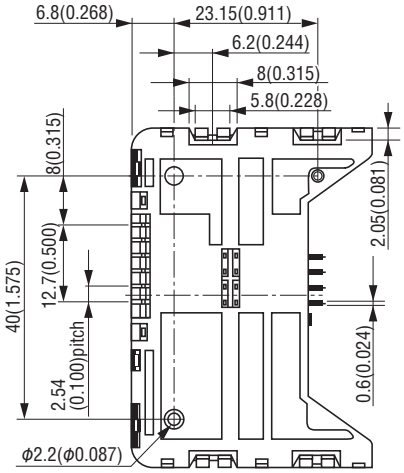

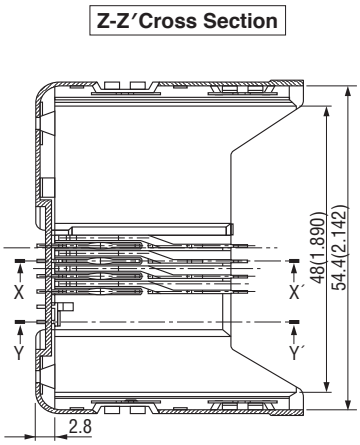

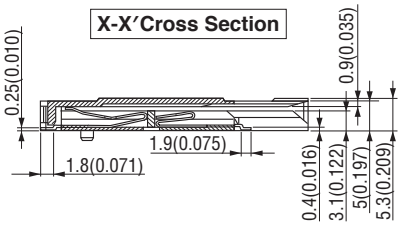

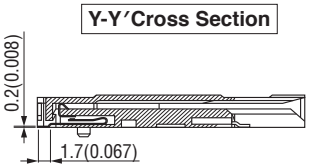

It is recommended that the connector be located 12mm(0.472") or more from the card insertion opening of the epuipment that the connector is used in. This 12mm(0.472") or more dimension, from the outside of the opening to the leading edge of the connector, prevents the card from being displaced by vibration.

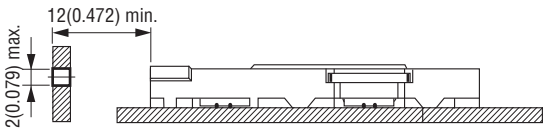

Packaging style
Tray

Product Table

No. of contacts	Part Number	Number of packaging
8	ISC3-08S-5F	15

ISC5-08S-F (Through hole,Short guide type)

Unit : mm(inch)

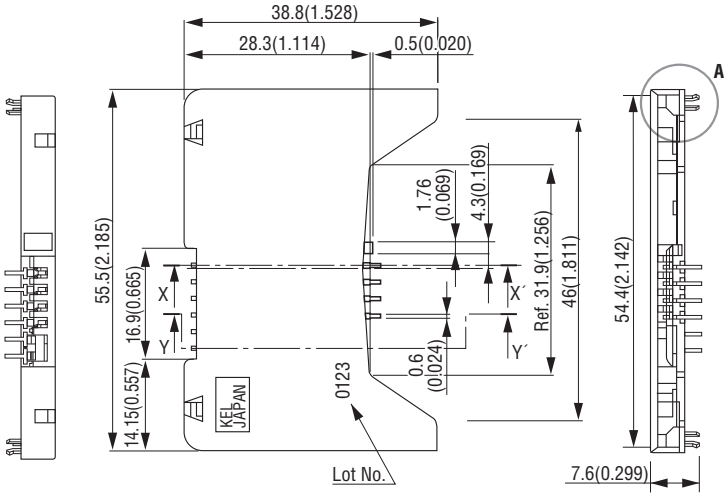

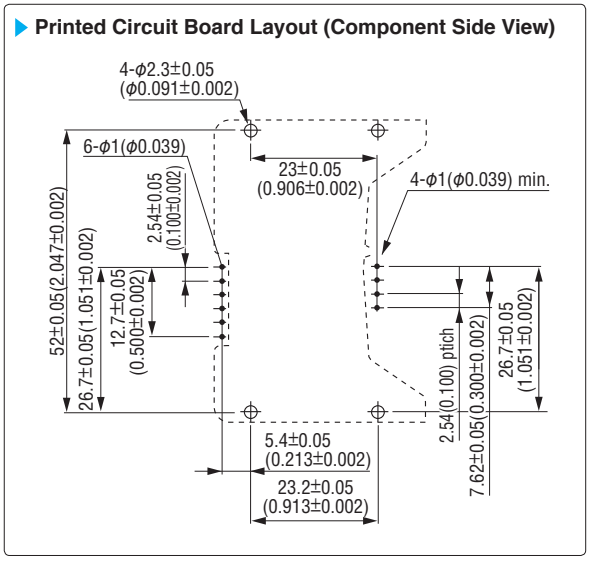

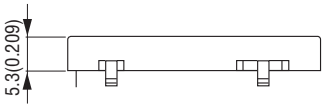

Detail of section A

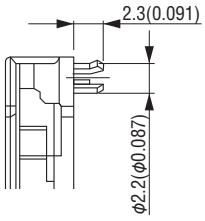

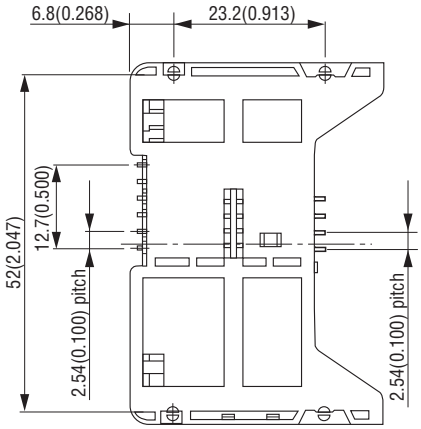

X-X′Cross Section

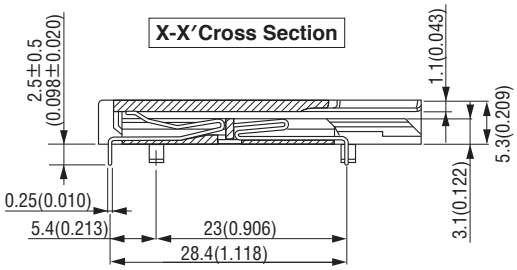

Y-Y′Cross Section

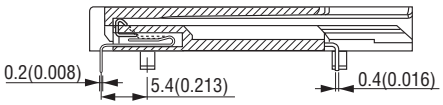

It is recommended that the connector be located 12mm(0.472") or more from the card insertion opening of the equipment that the connector is used in. This 12mm(0.472") or more dimension, from the outside of the opening to the leading edge of the connector, prevents the card from being displaced by vibration.

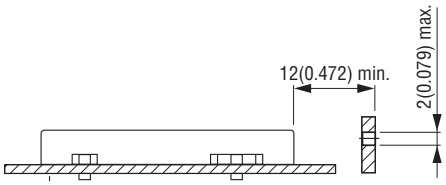

Packaging style
Tray

Product Table

No. of contacts	Part Number	Number of packaging
8	ISC5-08S-F	15

KDS SERIES

ROTARY DIP CODE SWITCH

RoHS Compliant

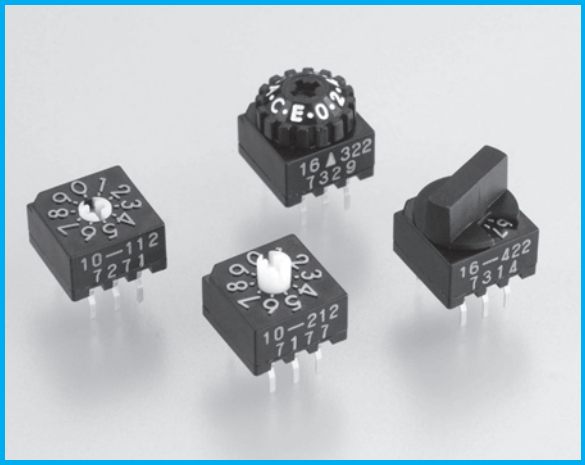

FEATURES

- Because its lead pitch is consistent with standard ICs, the products can be mounted, in series, on an IC-pitch printed circuit board.
- The design allows consolidation with other electronic components, allowing high-density packaging.
- Mounting efficiency has been further enhanced through the rounding of tail tips.
- Kinked tails prevent lifting during soldering.
- Binary decimal (10 positions) and hexadecimal (16 positions), both having real and complimentary codes.
- 4 different rotor styles; flat, indicator, knob and shaft style.

Flat type: It is operated using the tip of a (screw driver width : 3mm).
Indicator type:It is operated using the tip of a screwdriver.The right-angle design also facilitates operation from the side.
Knob type: It is operable by hand.
Shaft type: It is operated using the tip of a screwdriver (screw driver width : 3mm to 5mm). Furthermore, the panel surface and control section can be arranged in parallel.

ORDER CODE

KDS □□-□□2□-F

① ② ③ ④ ⑤ ⑥

*Please order in multiples of the quantity per package.

①	【Series name】 KDS
②	【Code】 10 : Binary Decimal 16 : Binary Hexadecimal
③	【Type】 1 : Flat Type 2 : Shaft Type 3 : Indicator Type 4 : Knob Type
④	【Code】 12 : Real Code 22 : Compliment Code
⑤	【Color】 (Only knob type) Omit : Black R : Red G : Green
⑥	【RoHS】 F : RoHS compliant

【Code】

●…Real Code ○…Complement Code

PIN No.	POSITION															
	0	1	2	3	4	5	6	7	8	9	A	B	C	D	E	F
C1	○	●	○	●	○	●	○	●	○	●	○	●	○	●	○	●
C2	○	○	●	●	○	○	●	●	○	○	●	●	○	○	●	●
C4	○	○	○	○	●	●	●	●	○	○	○	○	●	●	●	●
C8	○	○	○	○	○	○	○	○	●	●	●	●	●	●	●	●

SPECIFICATIONS

Material and plating	
Insulator material	Glass-filled polyamide
Rotor material	Polyacetal
Contact material	Copper alloy
Contact plating	Gold over Nickel
PWB material	Glass epoxy
Pattern plating	Gold over Nickel
O-Ring material	Fluorine-contained rubber

Electrical Characteristics	
Current rating and voltage	Non switching 125mA, 30V DC Switching 125mA, 30V DC
Contact resistance	100mΩ max.
Dielectric withstanding voltage	250V AC for 1minute
Insulation resistance	1,000MΩ min. at 250V DC
Durability	20,000 actuations
Position	10 and 16
Operating temperature	-25°C to +85°C

〔Solvents Acceptable〕

●Isopropyl alcohol ●Ethyl alcohol ●Trichlene(Trichloroethylene) ●Benzine ●Toluene
●Chlorothene(Trichloroethane) ●Freon(Trichlorotrifuoroethane)

〔Solvents Not acceptable〕

●Acethone ●Methanol

KDS□□-□□2□-F

Unit : mm(inch)

Printed Circuit Board Layout (Component Side View)

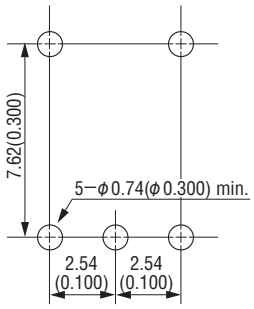

◆Flat Type

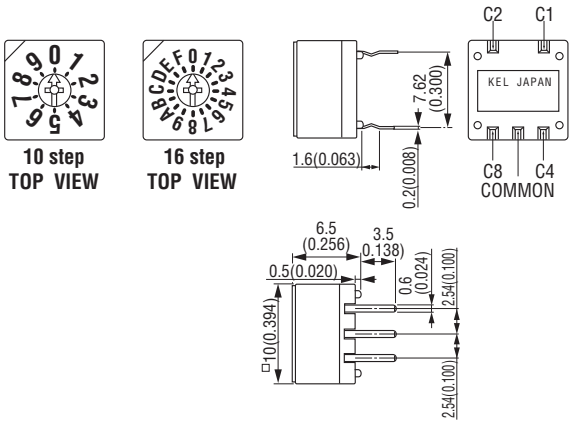

◆Indicator Type

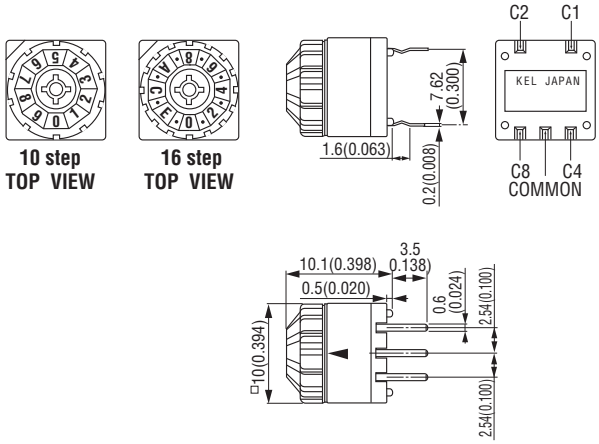

◆Knob Type

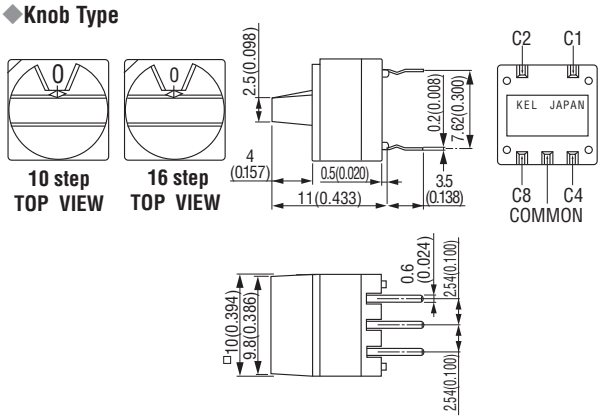

◆Shaft Type

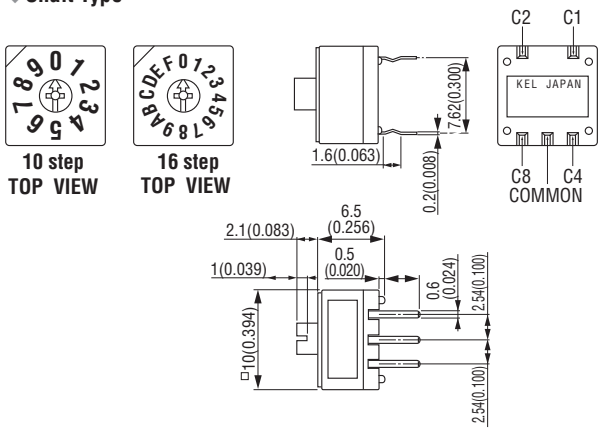

Packaging style
Pipe

Number of packaging
50

DSP SERIES

DIP SHORTING PLUG

RoHS Compliant

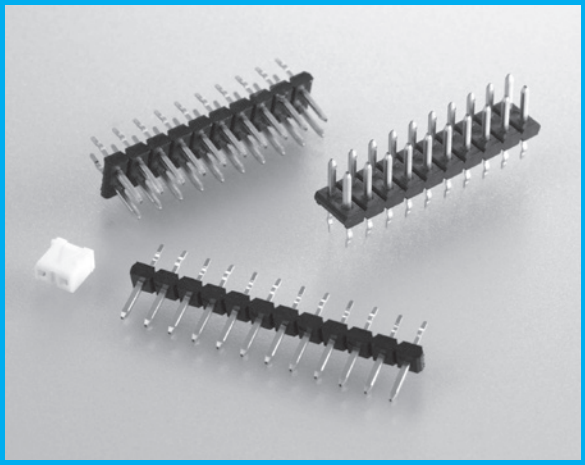

FEATURES

- 2.54mm(0.100") terminal grid.
- Side and end stackable.
- Low profile 6mm(0.236").
- Kinked tails hold plug to PCB during soldering.
- The chain form (10 chains) of the DSP01 enhances mounting efficiency.
- Single and dual row in several variations.
- Due to its unique design concept, it realizes high reliability and low cost.

ORDER CODE

DSP0□-□□□-43□G-□

① ② ③ ④ ⑤

*Please order in multiples of the quantity per package.

① **【Type】** **DSP01 :** Socket **DSP02 :** Dual inline plug **DSP03 :** Single inline plug

② **【No. of contacts】** (DSP01) **002 :** 2pin (DSP02) **002 :** 2pin **004 :** 4pin **006 :** 6pin **008 :** 8pin **010 :** 10pin **012 :** 12pin **014 :** 14pin **016 :** 16pin **020 :** 20pin **030 :** 30pin **060 :** 60pin (DSP03) **003 :** 3pin **004 :** 4pin **008 :** 8pin **012 :** 12pin **024 :** 24pin **048 :** 48pin

③ **【Contact name】** **430 :** DSP01 **431 :** DSP02 **432 :** DSP03

④ **【Contact plating】** **G :** Gold Plating (RoHS compliant)

⑤ **【Color】** (Only DSP01) **9 :** White **0 :** Black **2 :** Red **5 :** Green **6 :** Blue

SPECIFICATIONS

Material and plating	
Insulator material	[DSP01]Glass-filled PBT (UL94V-0) Standard color: white Semi-standard:Black, Red, Green, blue [DSP02/03]Glass-filled Nylon 66 (UL94V-0), Black
Contact material	Copper alloy
Contact plating	Gold over Nickel

Electrical Characteristics	
Current rating	1A per contact
Contact resistance	20mΩ max. (Between plug terminals of a closed circuit while mounted to a socket.)
Dielectric withstanding voltage	1000V AC for 1 minute. (Between plug terminals of a open circuit while mounted to a socket.)
Insulation resistance	1,000MΩ min. at 500V DC (Between plug terminals of a open circuit while mounted to a socket.)
Insertion force	9.80N max./2 terminals
Withdrawal force	0.88N min./2 terminals
Operating temperature	-55°C to +85°C

DSP0□-□□□-43□G-□

Unit : mm(inch)

DSP01-002-430G-□

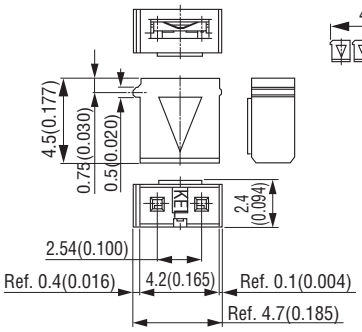

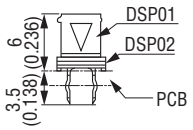

Mating Drawing

Printed Circuit Board Layout (Component Side View)

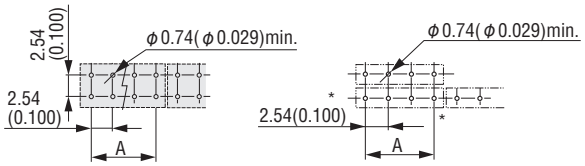

Packaging style
Other

Product Table

No. of contacts	Part Number	Number of packaging
2	DSP01-002-430G-□	1,000

DSP02-□□□-431G

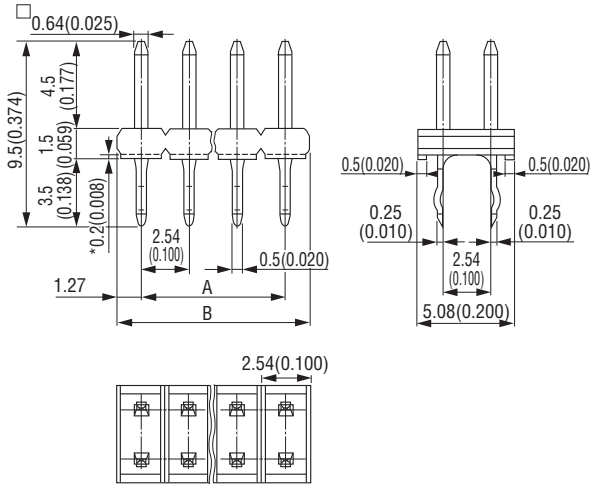

*Units with standoffs of 0.5 mm are also available.

Packaging style
Other

Product Table / Dimensions

No. of contacts	Part Number	A	B	Number of packaging
2	DSP02-002-431G	—	2.54 (0.100)	100
4	DSP02-004-431G	2.54 (0.100)	5.08 (0.200)	100
6	DSP02-006-431G	5.08 (0.200)	7.62 (0.300)	100
8	DSP02-008-431G	7.62 (0.300)	10.16 (0.400)	100
10	DSP02-010-431G	10.16 (0.400)	12.70 (0.500)	100
12	DSP02-012-431G	12.70 (0.500)	15.24 (0.600)	100
14	DSP02-014-431G	15.24 (0.600)	17.78 (0.700)	100
16	DSP02-016-431G	17.78 (0.700)	20.32 (0.800)	100
20	DSP02-020-431G	22.86 (0.900)	25.40 (1.000)	100
30	DSP02-030-431G	35.56 (1.400)	38.10 (1.500)	100
60	DSP02-060-431G	73.66 (2.900)	76.20 (3.000)	100

DSP03-□□□-432G

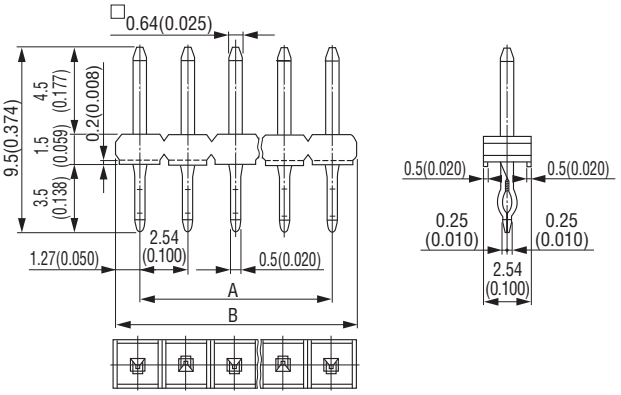

Packaging style
Other

Product Table / Dimensions

No. of contacts	Part Number	A	B	Number of packaging
3	DSP03-003-432G	5.08 (0.200)	7.62 (0.300)	100
4	DSP03-004-432G	7.62 (0.300)	10.16 (0.400)	100
8	DSP03-008-432G	17.78 (0.700)	20.32 (0.800)	100
12	DSP03-012-432G	27.94 (1.100)	30.48 (1.200)	100
24	DSP03-024-432G	58.42 (2.300)	60.96 (2.400)	100
48	DSP03-048-432G	119.38 (4.700)	121.92 (4.800)	100

M E M O

BATTERY CONNECTORS

- 7010/7011/7030/7040 SERIES
- GC/GD SERIES
- GF SERIES

B.C.E. S.r.l.
Via Regina Pacis, 54/c - I 41049 Sassuolo (MO)
Tel.: (+39) 0536 811616 - Fax.: (+39) 0536 811500
e-mail: bce@bce.it - Website: www.bce.it

7010/7011/7030/7040 SERIES

RoHS Compliant

TERMINAL BLOCK CONNECTOR

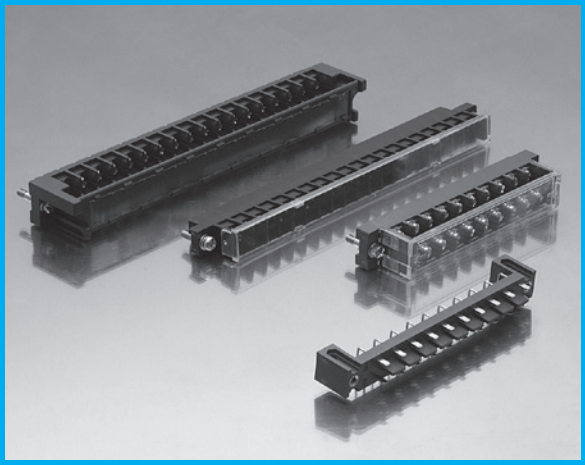

7010/7030 Series
10.16mm pitch terminal block connector, Receptacle

7011 Series
10.16mm pitch terminal block connector,Header

7040 Series
9.0mm pitch terminal block connector

10.16mm PITCH TERMINAL BLOCK CONNECTOR 7010/7011/7030 SERIES

RoHS Compliant

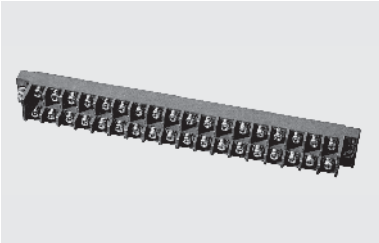

ORDER CODE 7010-□□□-160-F
① ② ③ ④

*Please order in multiples of the quantity per package.

① 【Type】 7010 : Receptacle
② 【Number of contacts】 012 : 12pin 020 : 20pin 036 : 36pin
③ 【Contact name】 160
④ 【RoHS】 F : RoHS compliant

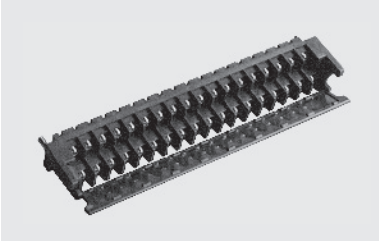

ORDER CODE 7030-□□□-160-F
① ② ③ ④

*Please order in multiples of the quantity per package.

① 【Type】 7030 : Receptacle
② 【Number of contacts】 012 : 12pin 020 : 20pin 036 : 36pin
③ 【Contact name】 160
④ 【RoHS】 F : RoHS compliant

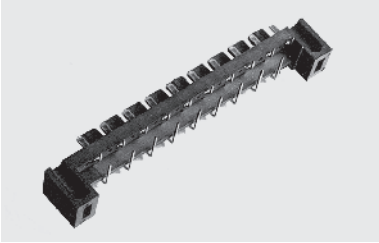

ORDER CODE 7011-□□□-□□□□-F
① ② ③ ④

*Please order in multiples of the quantity per package.

① 【Type】 7011 : Header
② 【Number of contacts】 012 : 12pin 020 : 20pin 036 : 36pin
③ 【Contact name】 161L : Right angle (Left) 161R : Right angle (Right) 163 : Straight
④ 【RoHS】 F : RoHS compliant

SPECIFICATIONS

Material and plating		Electrical Characteristics	
Insulator material	Glass-Filled PBT(UL94V-0)	Current rating	5A per contact
Contact material	Copper Alloy	Contact resistance	16mΩ max.
Contact plating	[7010/7030] Gold over nickel (A part) [7011] Gold over Nickel	Dielectric withstanding voltage	2000V AC for 1 minute
		Insulation resistance	5,000MΩ min. at 500V DC
Captive clamp screw	M3.5×8 [7010](Material) Steel (Finish) Trivalent Chromate plating [7030](Material) Brass (Finish) Nickel plating	Insertion force	4.45N max./pair
		Withdrawal force	0.56N min./pair
Jackscrew	M4 (Material) Brass (Finish) Nickel plating	Recommended cable	Stranded wire: 2.0mm^2 max. Single wire: 1.6mm max.

7010-□□□-160-F (Receptacle)

Unit : mm(inch)

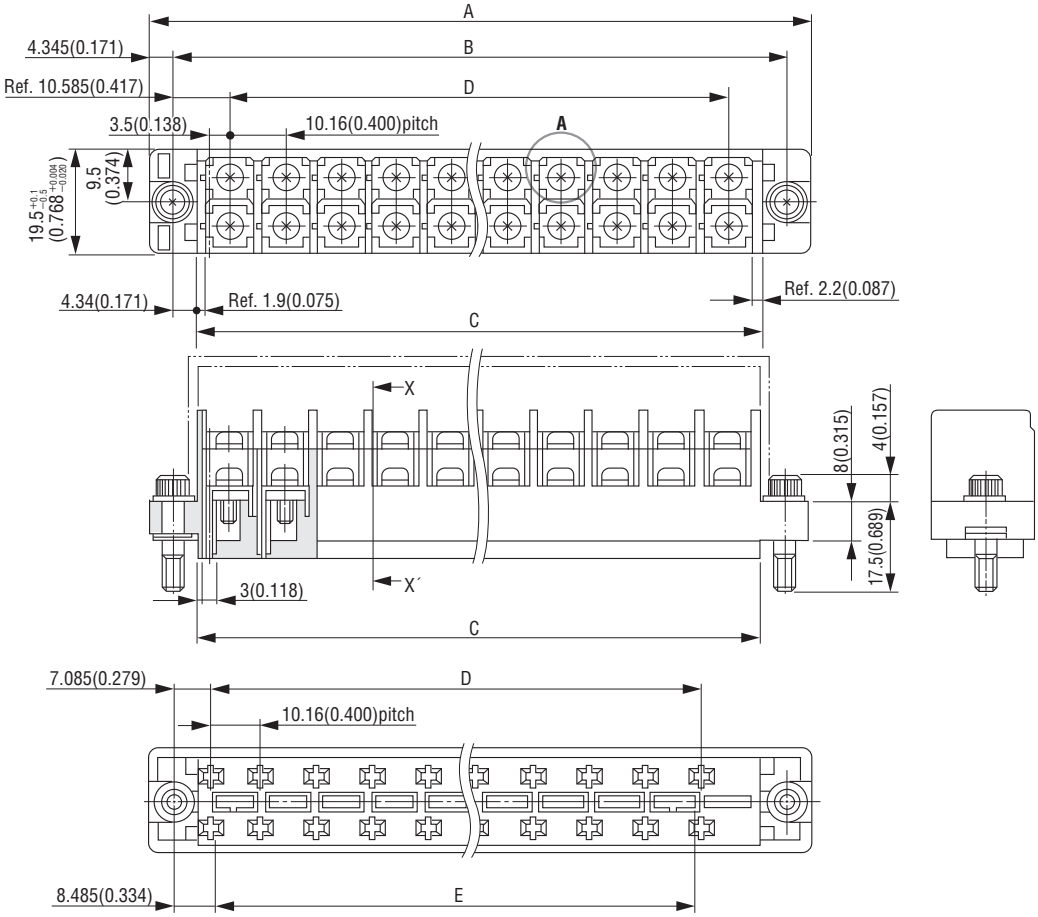

X-X′Cross Section

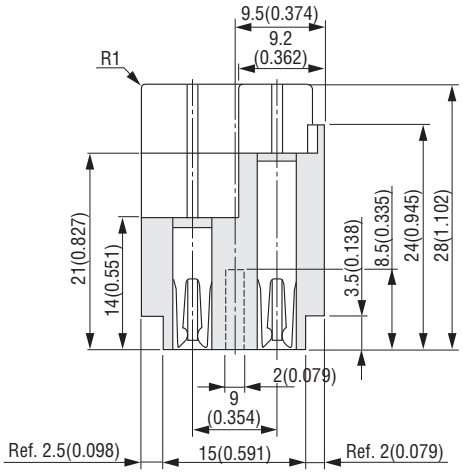

Detail of Area A

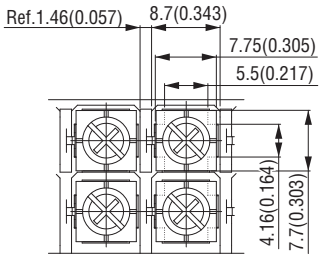

Packaging style
Other

Product Table / Dimensions

No. of contacts	Part Number	A	B	C	D	E	Number of packaging
12	7010-012-160-F	81.08 (3.192)	72.39 (2.850)	63.43 (2.497)	50.80 (2.000)	48.80 (1.921)	45
20	7010-020-160-F	121.72 (4.792)	113.03 (4.450)	104.07 (4.097)	91.44 (3.600)	89.44 (3.521)	30
36	7010-036-160-F	203.00 (7.992)	194.31 (7.650)	185.35 (7.297)	172.72 (6.800)	170.72 (6.721)	15

7030-□□□-160-F (Receptacle)

Unit : mm(inch)

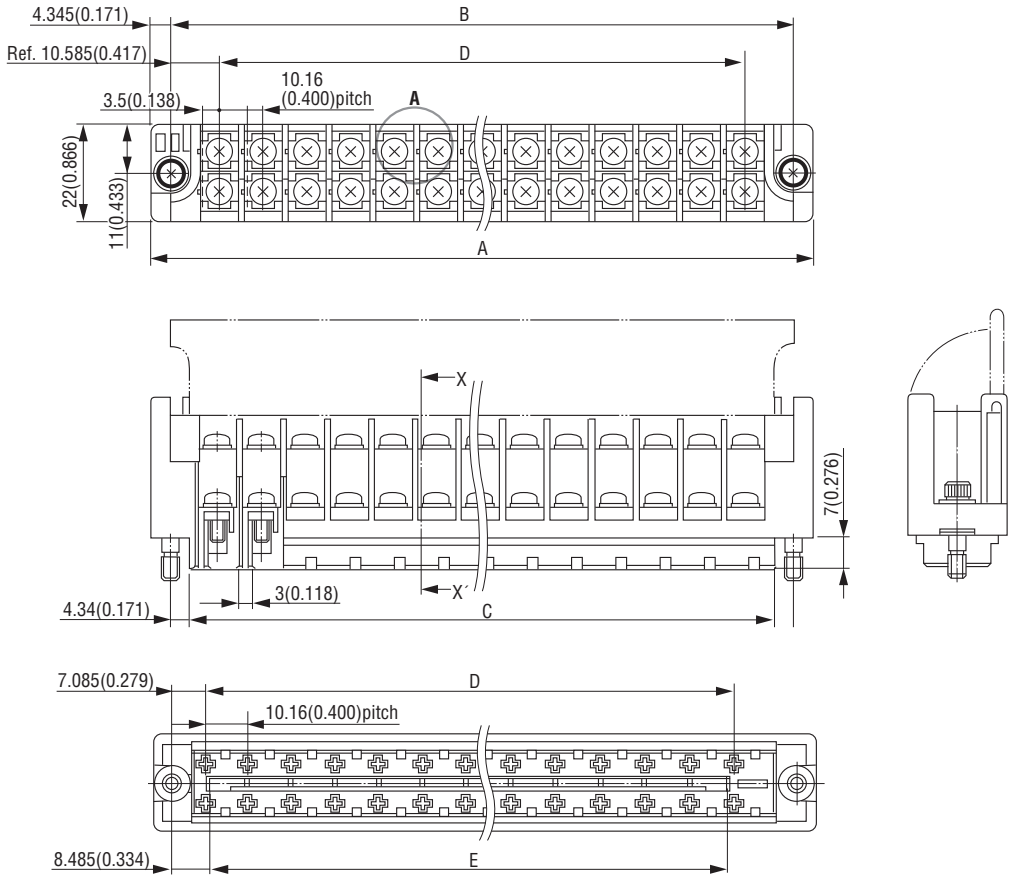

X-X′Cross Section

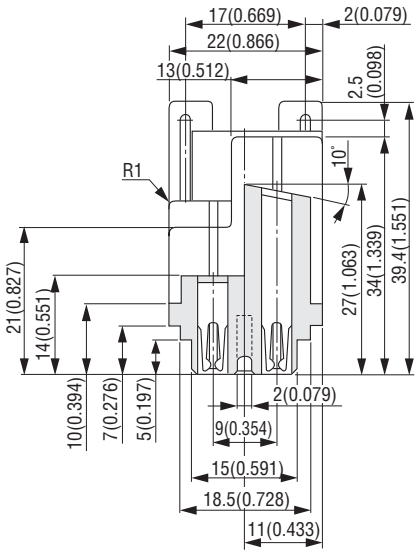

Detail of Area A

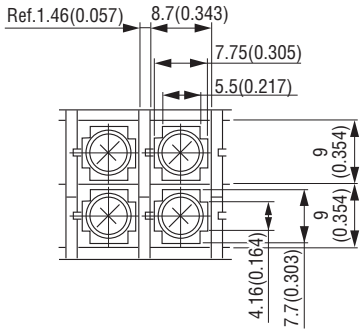

Packaging style
Other

Product Table / Dimensions

No. of contacts	Part Number	A	B	C	D	E	Number of packaging
12	7030-012-160-F	81.08 (3.192)	72.39 (2.850)	63.43 (2.497)	50.80 (2.000)	48.80 (1.921)	27
20	7030-020-160-F	121.72 (4.792)	113.03 (4.450)	104.07 (4.097)	91.44 (3.600)	89.44 (3.521)	18
36	7030-036-160-F	203.00 (7.992)	194.31 (7.650)	185.35 (7.297)	172.72 (6.800)	170.72 (6.721)	9

7011-□□□-161L-F (Header, Right angle)

Unit : mm(inch)

Printed Circuit Board Layout (Component Side View)

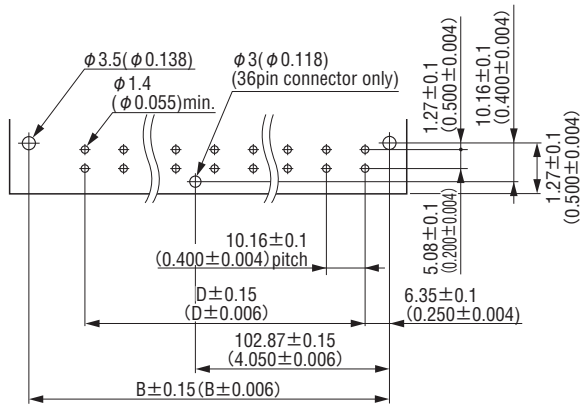

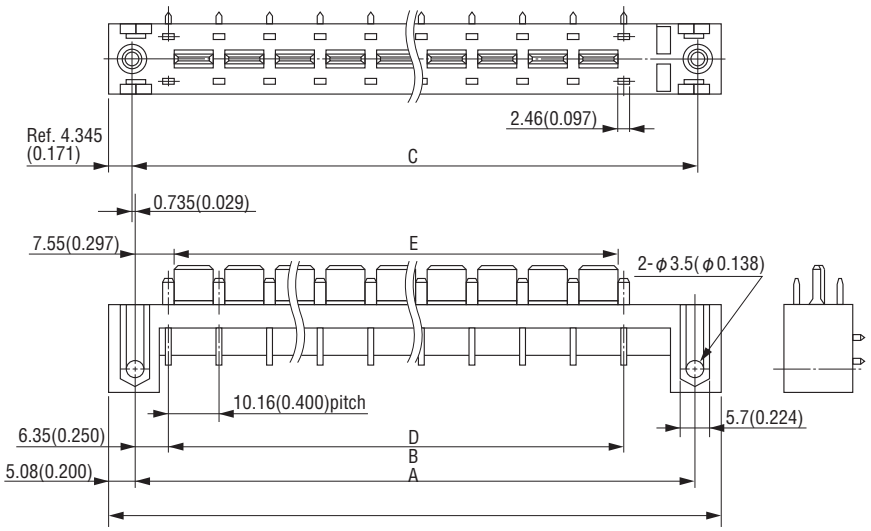

X-X′Cross Section

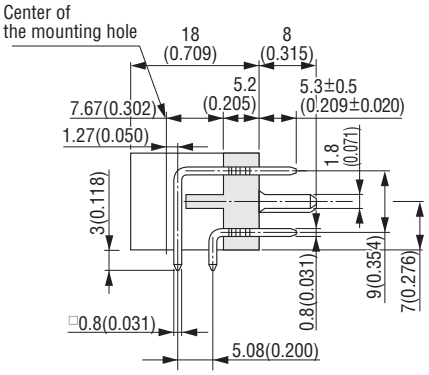

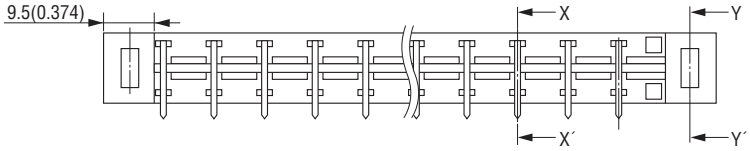

Y-Y′Cross Section

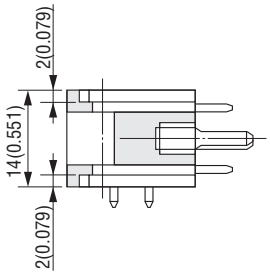

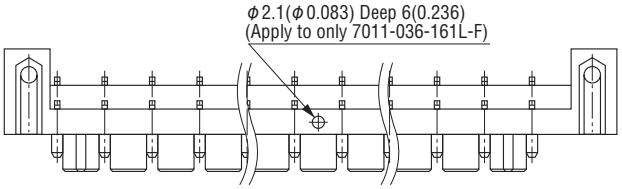

Packaging style
Other

Product Table / Dimensions

No. of contacts	Part Number	A	B	C	D	E	Number of packaging
12	7011-012-161L-F	81.08 (3.192)	71.12 (2.800)	72.39 (2.850)	50.80 (2.000)	48.50 (1.909)	90
20	7011-020-161L-F	121.72 (4.792)	111.76 (4.400)	113.03 (4.450)	91.44 (3.600)	89.14 (3.509)	60
36	7011-036-161L-F	203.00 (7.992)	193.04 (7.600)	194.31 (7.650)	172.72 (6.800)	170.42 (6.709)	30

7011-□□□-161R-F (Header, Right angle)

Unit : mm(inch)

Printed Circuit Board Layout (Component Side View)

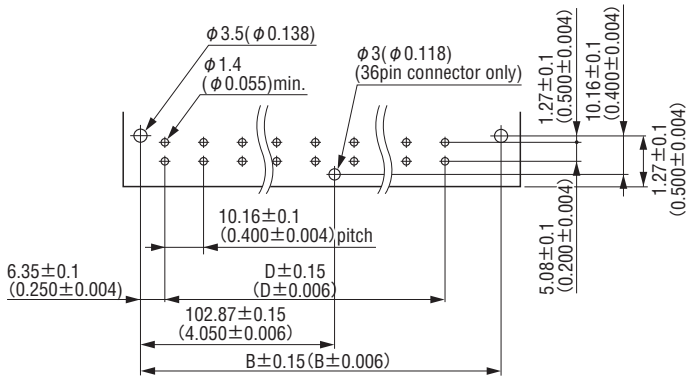

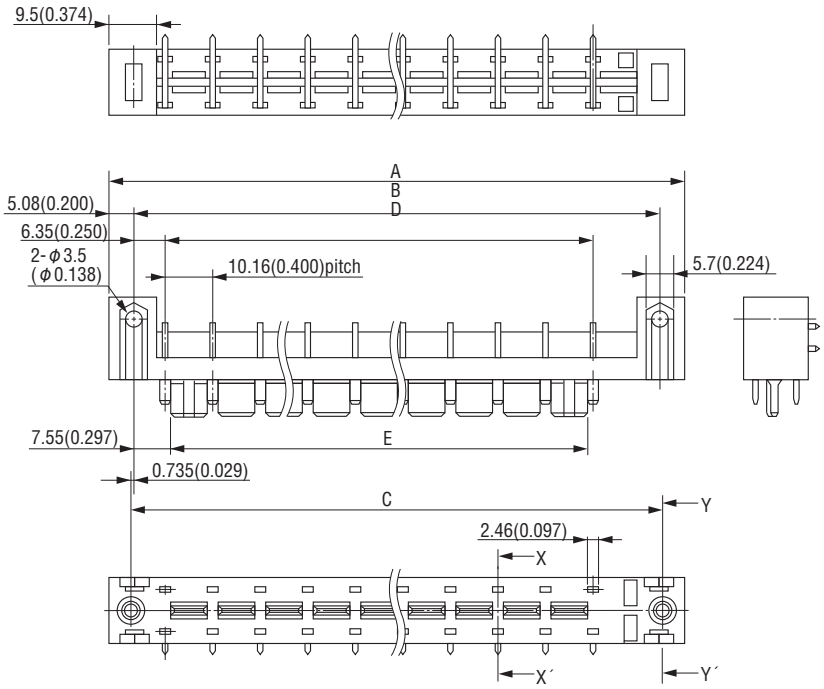

X-X′Cross Section

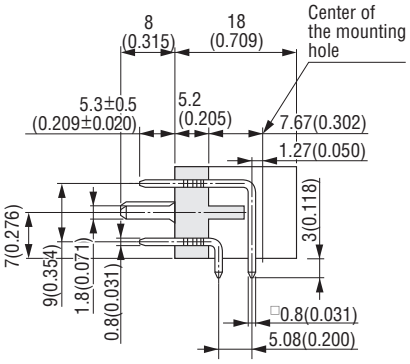

Y-Y′Cross Section

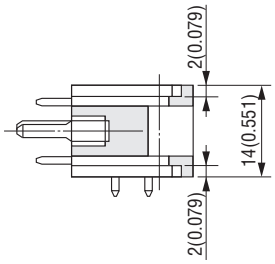

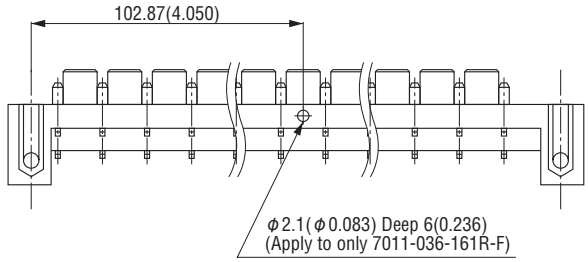

Packaging style
Other

Product Table / Dimensions

No. of contacts	Part Number	A	B	C	D	E	Number of packaging
12	7011-012-161R-F	81.08 (3.192)	71.12 (2.800)	72.39 (2.850)	50.80 (2.000)	48.50 (1.909)	90
20	7011-020-161R-F	121.72 (4.792)	111.76 (4.400)	113.03 (4.450)	91.44 (3.600)	89.14 (3.509)	60
36	7011-036-161R-F	203.00 (7.992)	193.04 (7.600)	194.31 (7.650)	172.72 (6.800)	170.42 (6.709)	30

7011-□□□-163-F (Header, Straight)

Unit : mm(inch)

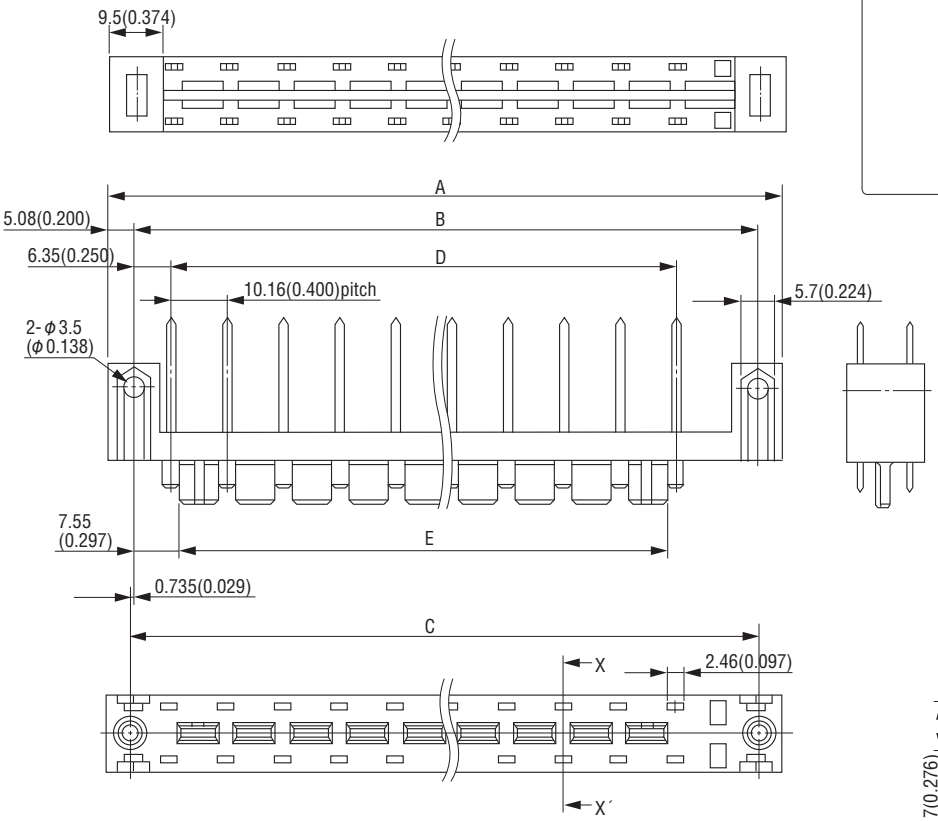

Printed Circuit Board Layout (Component Side View)

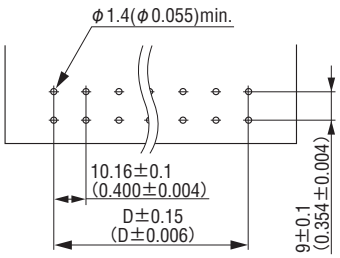

X-X′Cross Section

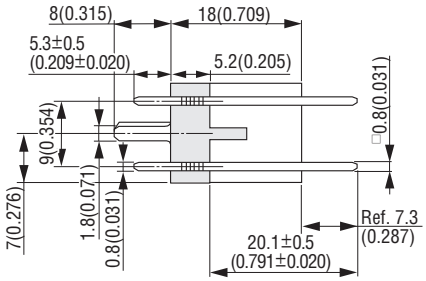

Packaging style
Other

Product Table / Dimensions

No. of contacts	Part Number	A	B	C	D	E	Number of packaging
12	7011-012-163-F	81.08 (3.192)	71.12 (2.800)	72.39 (2.850)	50.80 (2.000)	48.50 (1.909)	50
20	7011-020-163-F	121.72 (4.792)	111.76 (4.400)	113.03 (4.450)	91.44 (3.600)	89.14 (3.509)	30
36	7011-036-163-F	203.00 (7.992)	193.04 (7.600)	194.31 (7.650)	172.72 (6.800)	170.42 (6.709)	20

7000 series product table & combination

Receptacle (Terminal side)	Header (Board side) 7011-□□□-161 R-F·L-F	Header (Board side) 7011-□□□-163-F
7010-□□□-160-F	○	○
7030-□□□-160-F	○	○

9.0mm PITCH TERMINAL BLOCK CONNECTOR 7040 SERIES

RoHS Compliant

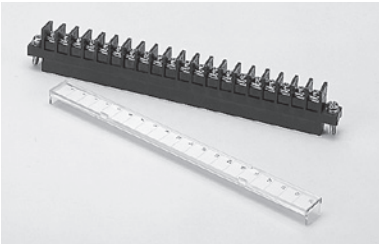

ORDER CODE

7040-020-165-F

① ② ③ ④

*Please order in multiples of the quantity per package.

① 【Series name】 7040	③ 【Contact name】 165
② 【Number of contacts】 020 : 20pin	④ 【RoHS】 F : RoHS compliant

SPECIFICATIONS

Material and plating		Electrical Characteristics	
Insulator material	Glass-Filled PBT(UL94V-0)	Current rating	10A per contact
Contact material	Copper Alloy	Contact resistance	16mΩ max.
Contact plating	Gold over nickel (A part)	Dielectric withstanding voltage	2000V AC for 1 minute
Captive clamp screw	M3×6 (Material) Steel (Finish) Trivalent Chromate plating	Insulation resistance	1,000MΩ min. at 500V DC
		Insertion force	80.4N max./pair
Jackscrew	M4×18 (Material) Steel (Finish) Trivalent Chromate plating	Withdrawal force	12.7N min./pair
		Recommended cable	φ0.3～2.0mm(Crimping terminal use)

7040-020-165-F

Unit : mm(inch)

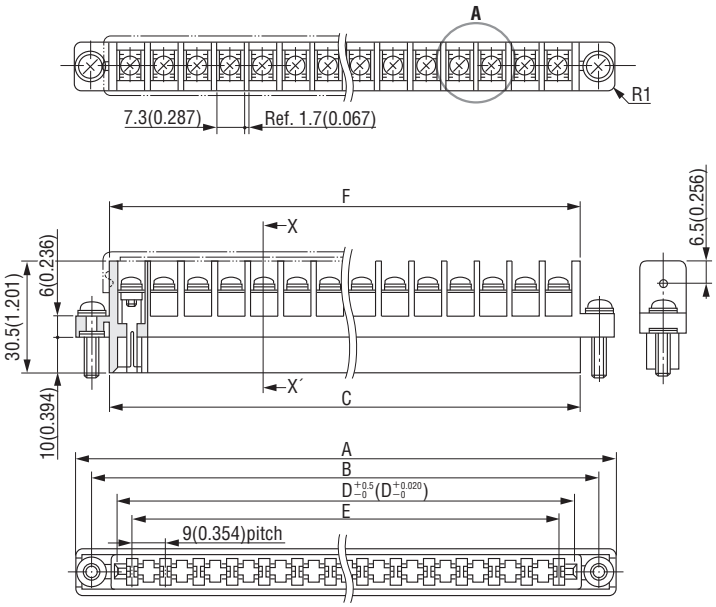

Printed Circuit Board Layout (Component Side View)

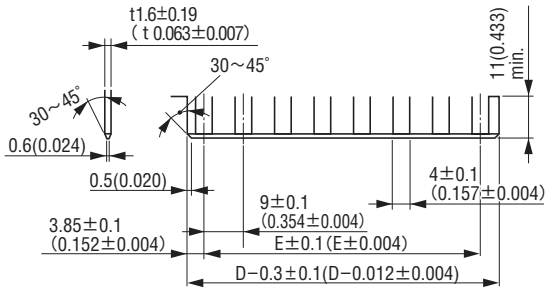

X-X′Cross Section

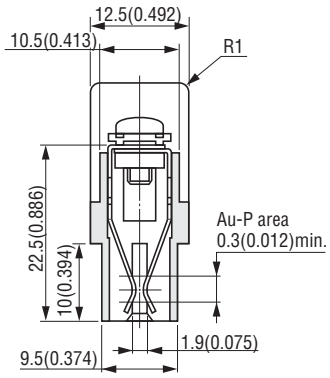

Detail of Area A

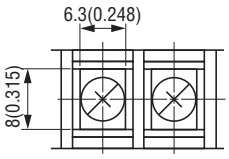

Packaging style
Other

Product Table / Dimensions

No. of contacts	Part Number	A	B	C	D	E	F	Number of packaging
20	7040-020-165-F	202.0 (7.953)	193.0 (7.598)	183.0 (7.205)	179.0 (7.047)	171.0 (6.732)	182.0 (7.165)	24

GC / GD SERIES

5mm PITCH /3mm PITCH 1 PIECE BATTERY CONNECTOR

RoHS Compliant

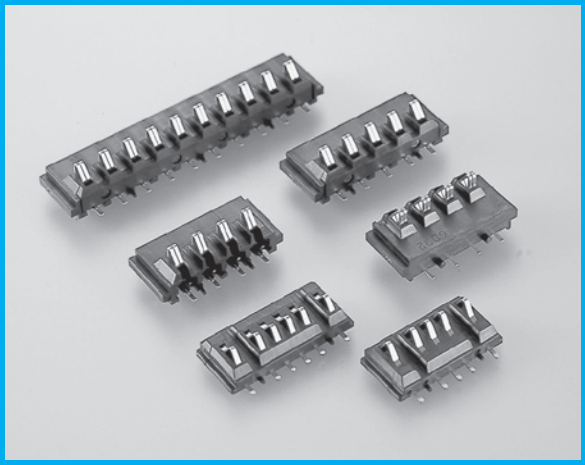

FEATURES

- In spite of its compant design, it ensures stroke displacement of 2.5mm for GC series and 2.3mm for GD series.
- Contact structure equipped with self-cleaning mechanism.
- Life is 10,000 cycles for GC series and 5,000 cycles for GD series.
  (Nickel plated battery terminal is changed every 1,000 cycles)
- Highly reliable and stable contact design.
- Gold plating for contact reliability.
- 4 variations : Standard type of 5mm pitch (GC11 series).
  Reverse type of 5mm pitch (GC02 series).
  Standard type of 3mm pitch (GD01 series).
  Reverse type of 3mm pitch (GD02 series).

ORDER CODE

GC□□-□□-□F

① ② ③ ④

*Please order in multiples of the quantity per package.

①	【Type】 GC11 : Standard type GC02 : Reverse type
②	【Number of contacts】 03 : 3pin 04 : 4pin 05 : 5pin 06 : 6pin 08 : 8pin 10 : 10pin
③	【Option】 1 : Standard type 2 : Reverse type
④	【RoHS】 F : RoHS compliant

ORDER CODE

GD□□-□□-1F

① ② ③ ④

*Please order in multiples of the quantity per package.

①	【Type】 GD01 : Standard type GD02 : Reverse type
②	【Number of contacts】 04 : 4pin 05 : 5pin 06 : 6pin 08 : 8pin 10 : 10pin
③	【Option】 1
④	【RoHS】 F : RoHS compliant

SPECIFICATIONS

Material and plating	
Insulator material	Glass-filled Modified polyamide 6T (UL 94V-0), Black
Contact material	Copper alloy
Contact plating	[GC series] (Contact area) Gold over Nickel (Terminal area) Tin copper over Nickel [GD series] Gold over Nickel

Electrical Characteristics	
Current rating	[GC series] 5A DC per contact(2contacts max.) [GD series] 5A DC per contact(2contacts only at both ends)
Current voltage	30V DC
Contact resistance	30mΩ max.
Dielectric withstanding voltage	650V AC for 1 minute
Insulation resistance	500MΩ min. at 500V DC
Total contact force	[GC series] 2.254N×No.of contacts max. [GD series] 1.96N ×No.of contacts max.
Operating temperature	-55°C to +85°C

*Specification for Battery electrode:Material ; Nickel GC series (Finish):Nickel plating 2~4μm Nickel GD series (Finish):Gold plating 0.3μm Nickel plating 2~4μm

CHARACTERISTICS

◆Stroke Displacement 2.5mm

- Contact adjusts to variations in battery pack position.
- Effective contact displacement is 1.5(0.059) max.

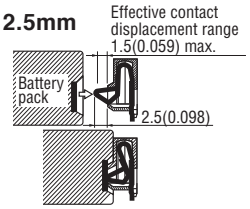

◆Wiping Effectiveness

- Probe pin construction does not provide a wiping mechanism which must be provided separately. As shown on the right, GC/GD series contacts wipe the battery pack terminals.

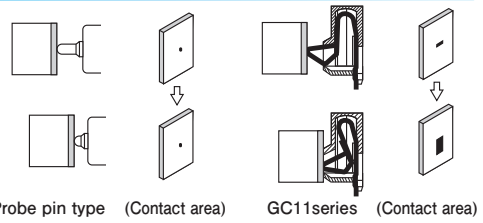

GC11-□□-1F (5mm pitch battery connector, Standard type)

Unit : mm(inch)

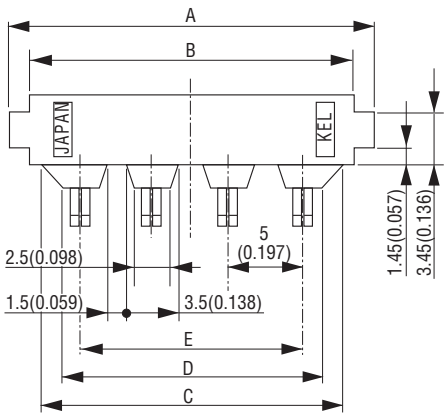

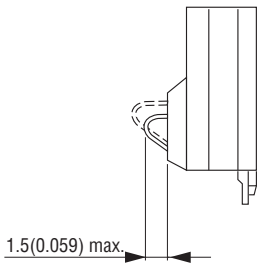

Effective contact displacement range

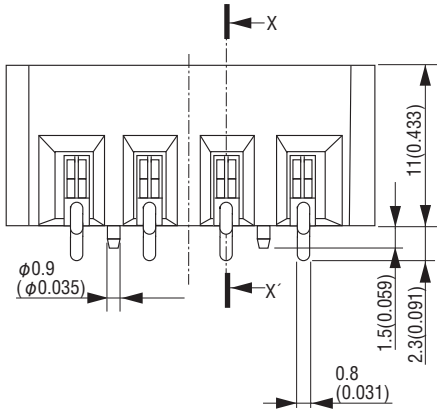

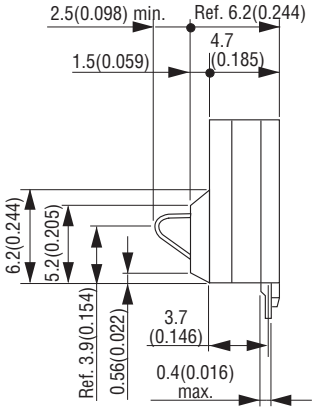

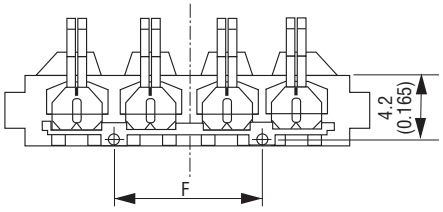

Printed Circuit Board Layout (Component Side View)

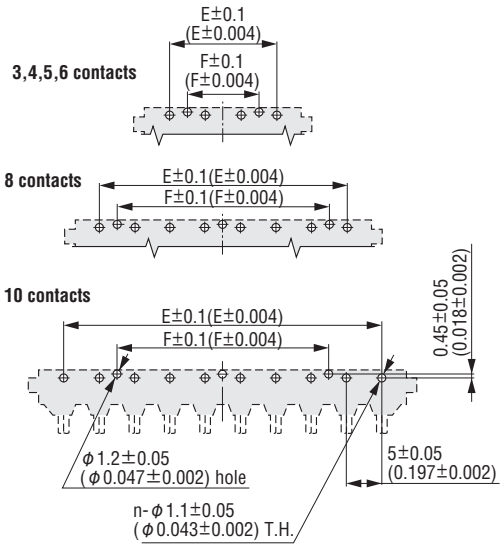

"n" is number of contacts.

X-X′Cross Section

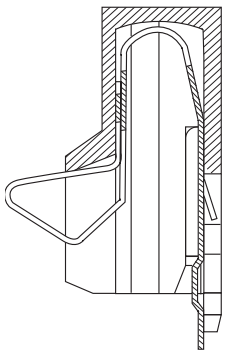

Packaging style
Tray

Product Table / Dimensions

No. of contacts	Part Number	A	B	C	D	E	F	Number of packaging
3	GC11-03-1F	20 (0.787)	17 (0.669)	15.6 (0.614)	13.4 (0.527)	10 (0.394)	5 (0.197)	50
4	GC11-04-1F	25 (0.984)	22 (0.866)	20.6 (0.811)	18.4 (0.724)	15 (0.591)	10 (0.394)	50
5	GC11-05-1F	30 (1.181)	27 (1.063)	25.6 (1.008)	23.4 (0.921)	20 (0.787)	15 (0.591)	50
6	GC11-06-1F	35 (1.378)	32 (1.260)	30.6 (1.205)	28.4 (1.118)	25 (0.984)	20 (0.787)	25
8	GC11-08-1F	45 (1.772)	42 (1.654)	40.6 (1.598)	38.4 (1.512)	35 (1.378)	30 (1.181)	25
10	GC11-10-1F	55 (2.165)	52 (2.047)	50.6 (1.992)	48.4 (1.906)	45 (1.772)	30 (1.181)	25

GC02-□□-2F (5mm pitch battery connector, Reverse type)

Unit : mm(inch)

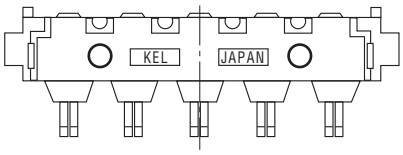

Printed Circuit Board Layout (Component Side View)

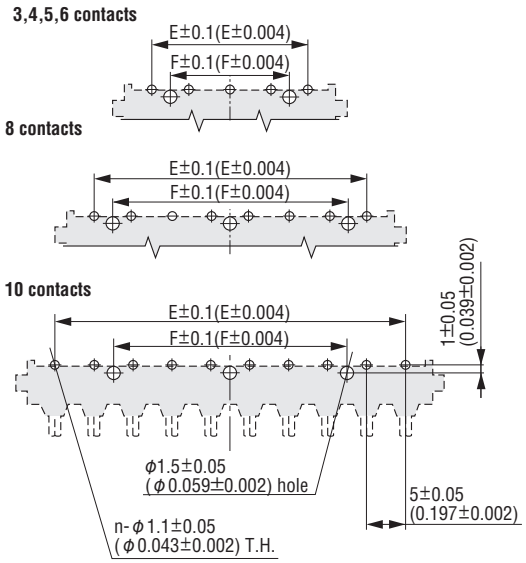

"n" is number of contacts.

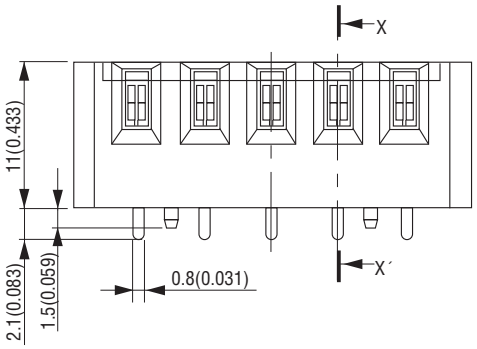

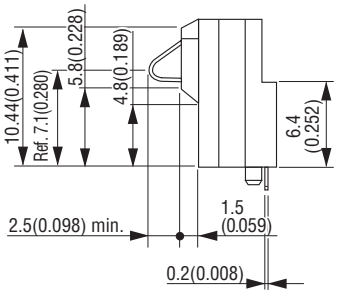

X-X′Cross Section

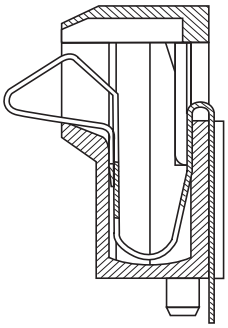

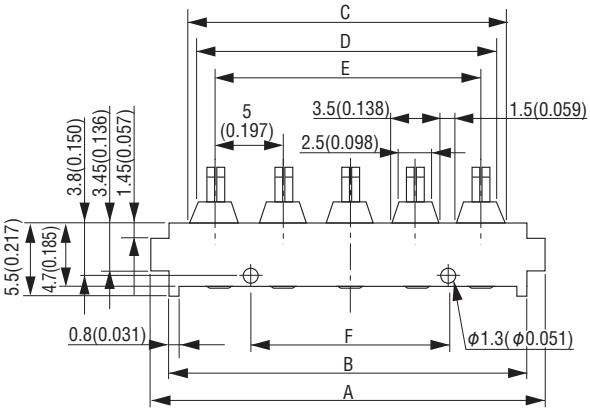

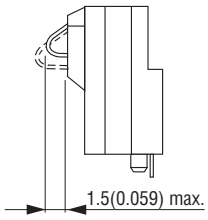

Effective contact displacement ran

Packaging style
Tray

Product Table / Dimensions

No. of contacts	Part Number	A	B	C	D	E	F	Number of packaging
3	GC02-03-2F	20 (0.787)	17 (0.669)	13.5 (0.531)	12.5 (0.492)	10 (0.394)	5 (0.197)	75
4	GC02-04-2F	25 (0.984)	22 (0.866)	18.5 (0.728)	17.5 (0.689)	15 (0.591)	10 (0.394)	65
5	GC02-05-2F	30 (1.181)	27 (1.063)	23.5 (0.925)	22.5 (0.886)	20 (0.787)	15 (0.591)	50
6	GC02-06-2F	35 (1.378)	32 (1.260)	28.5 (1.122)	27.5 (1.083)	25 (0.984)	20 (0.787)	39
8	GC02-08-2F	45 (1.772)	42 (1.654)	38.5 (1.516)	37.5 (1.476)	35 (1.378)	30 (1.181)	25
10	GC02-10-2F	55 (2.165)	52 (2.047)	48.5 (1.909)	47.5 (1.870)	45 (1.772)	30 (1.181)	25

B.C.E. S.r.l. Via Regina Pacis, 54/c - I 41049 Sassuolo (MO) Tel.: (+39) 0536 811616 - Fax.: (+39) 0536 811500 e-mail: bce@bce.it - Website: www.bce.it

GD01-□□-1F (3mm pitch battery connector, Standard type)

Unit : mm(inch)

Printed Circuit Board Layout (Component Side View)

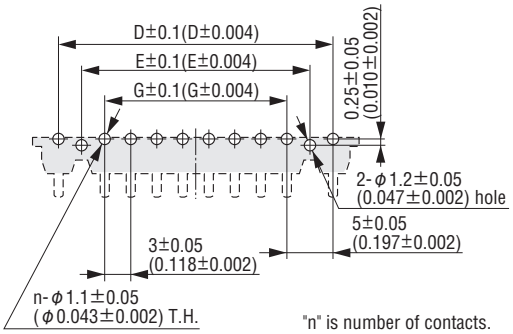

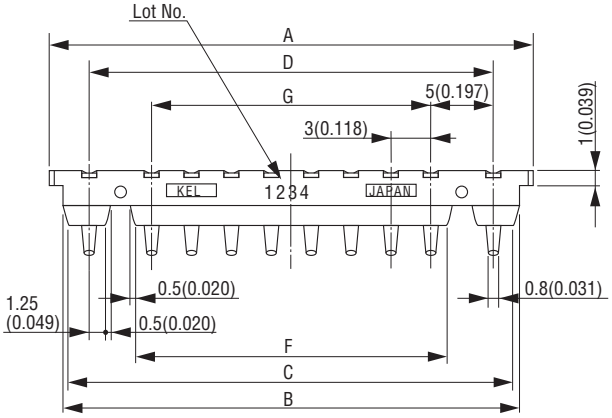

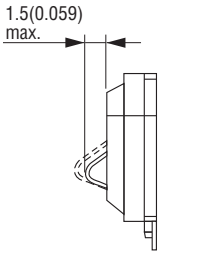

Effective contact displacement range

X-X′Cross Section

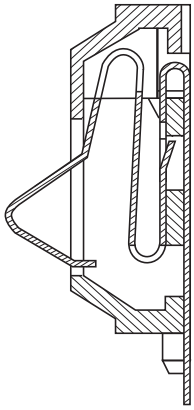

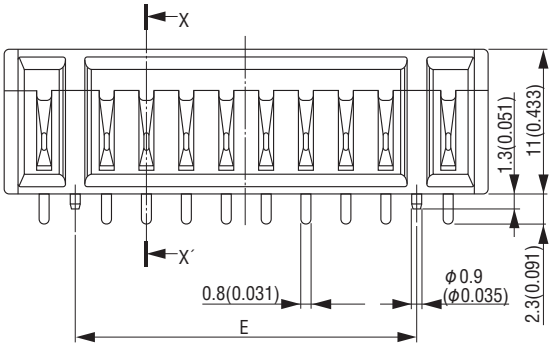

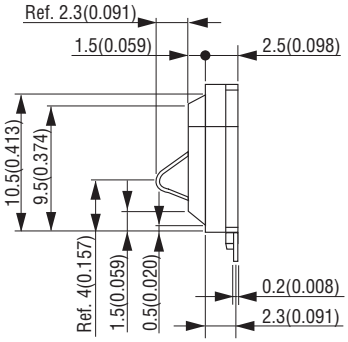

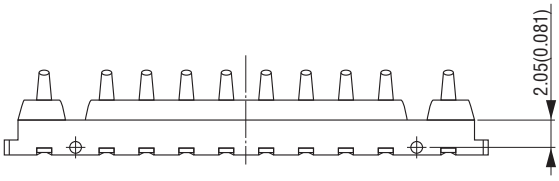

Packaging style
Tray

Product Table / Dimensions

No. of contacts	Part Number	A	B	C	D	E	F	G	Number of packaging
4	GD01-04-1F	19 (0.748)	17 (0.669)	16 (0.630)	13 (0.512)	8 (0.315)	5.5 (0.217)	3 (0.118)	90
5	GD01-05-1F	22 (0.866)	20 (0.787)	19 (0.748)	16 (0.630)	11 (0.433)	8.5 (0.335)	6 (0.236)	80
6	GD01-06-1F	25 (0.984)	23 (0.906)	22 (0.866)	19 (0.748)	14 (0.551)	11.5 (0.453)	9 (0.354)	70
8	GD01-08-1F	31 (1.220)	29 (1.142)	28 (1.102)	25 (0.984)	20 (0.787)	17.5 (0.689)	15 (0.591)	60
10	GD01-10-1F	37 (1.457)	35 (1.378)	34 (1.339)	31 (1.220)	26 (1.024)	23.5 (0.925)	21 (0.827)	50

GD02-□□-1F (3mm pitch battery connector, Reverse type)

Unit : mm(inch)

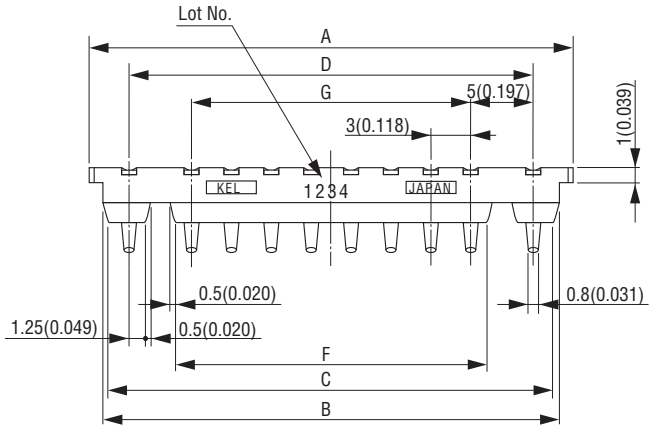

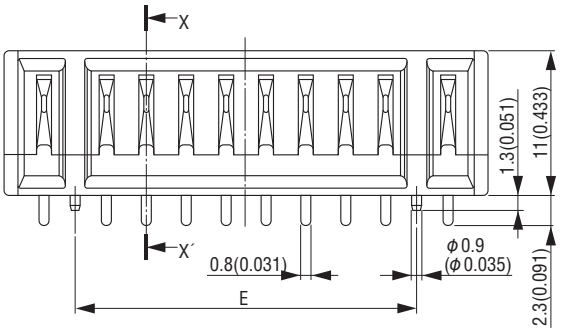

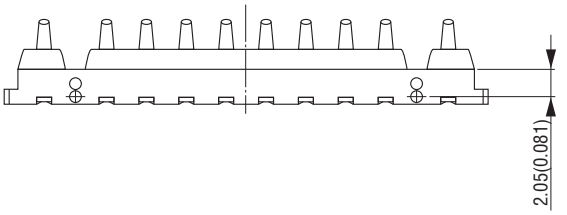

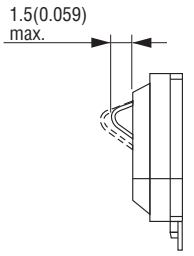

Effective contact displacement range

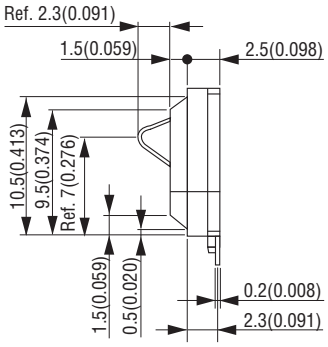

X-X′Cross Section

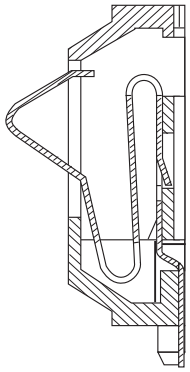

Printed Circuit Board Layout (Component Side View)

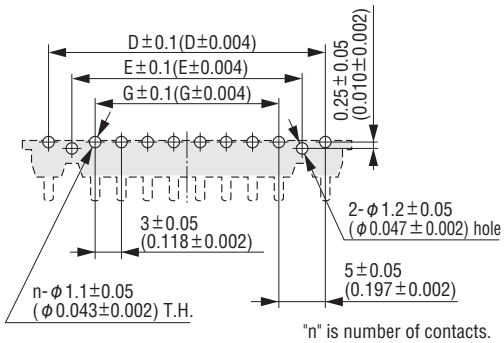

"n" is number of contacts.

Packaging style
Tray

Product Table / Dimensions

No. of contacts	Part Number	A	B	C	D	E	F	G	Number of packaging
4	GD02-04-1F	19 (0.748)	17 (0.669)	16 (0.630)	13 (0.512)	8 (0.315)	5.5 (0.217)	3 (0.118)	90
5	GD02-05-1F	22 (0.866)	20 (0.787)	19 (0.748)	16 (0.630)	11 (0.433)	8.5 (0.335)	6 (0.236)	80
6	GD02-06-1F	25 (0.984)	23 (0.906)	22 (0.866)	19 (0.748)	14 (0.551)	11.5 (0.453)	9 (0.354)	70
8	GD02-08-1F	31 (1.220)	29 (1.142)	28 (1.102)	25 (0.984)	20 (0.787)	17.5 (0.689)	15 (0.591)	60
10	GD02-10-1F	37 (1.457)	35 (1.378)	34 (1.339)	31 (1.220)	26 (1.024)	23.5 (0.925)	21 (0.827)	50

Fixing Method

Note:
Shown below are the recommended 'Fixing Guides' to protect the PCB and Battery Connector from stress when inserting/withdrawing the Battery pack.

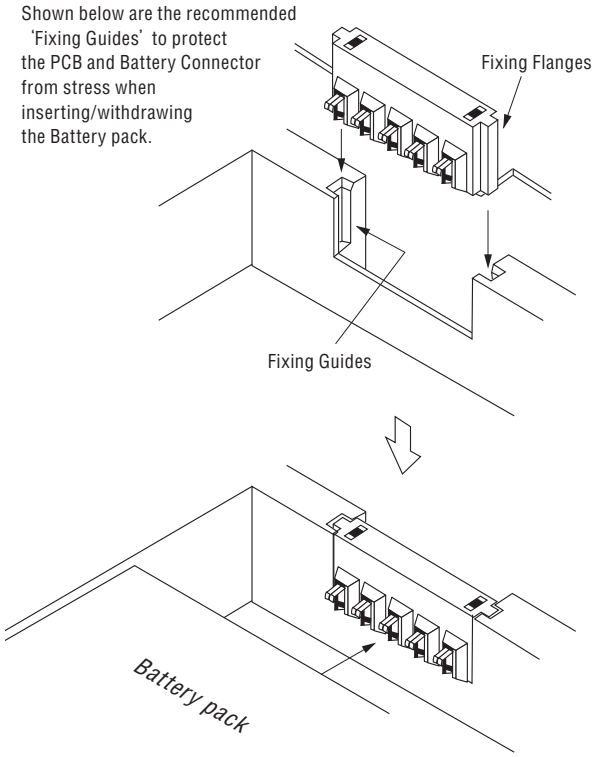

Directions For Battery Pack Insertion/Removal

Horizontal

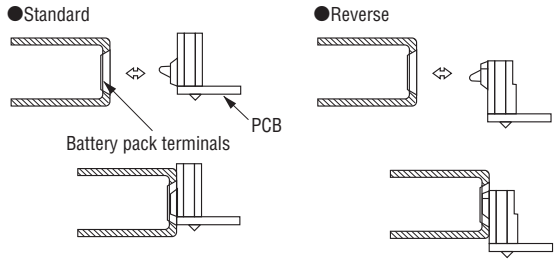

Vertical

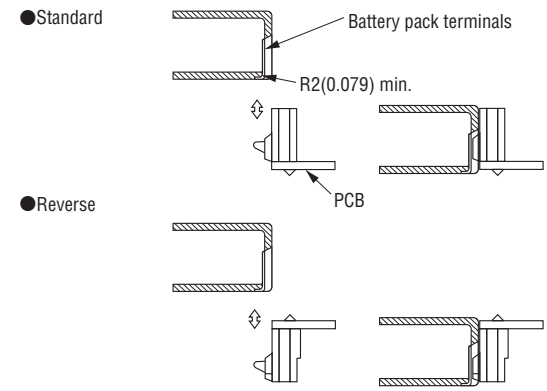

Recommended Dimensions for Battery Terminals

Unit : mm(inch)

GC Series

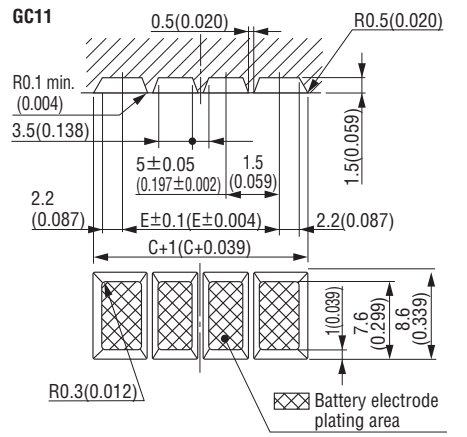

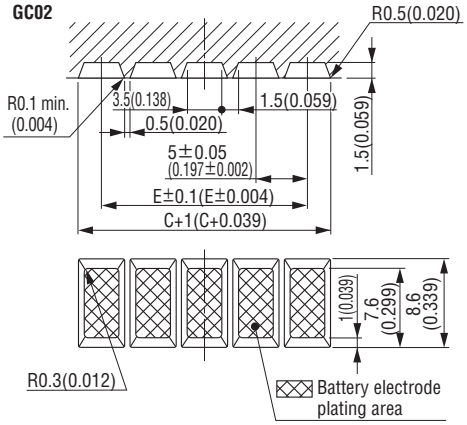

GD Series

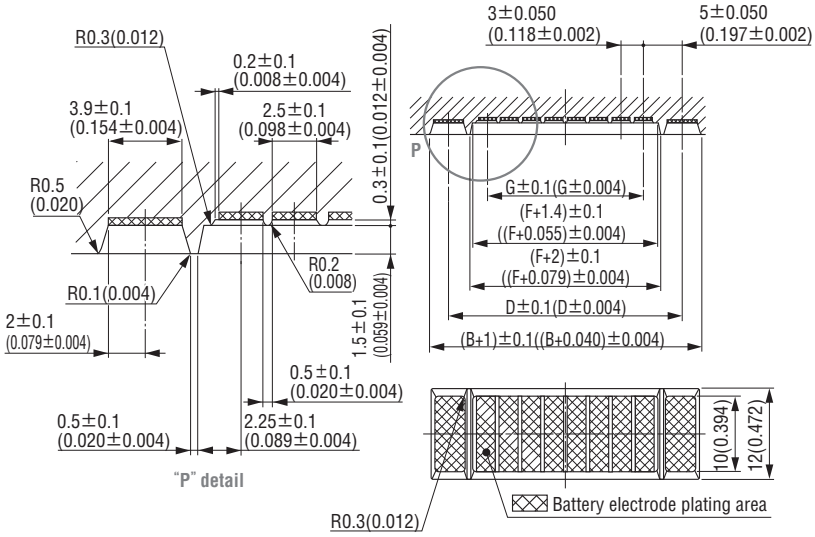

GF SERIES

2mm PITCH 2 PIECE BATTERY CONNECTOR

RoHS Compliant

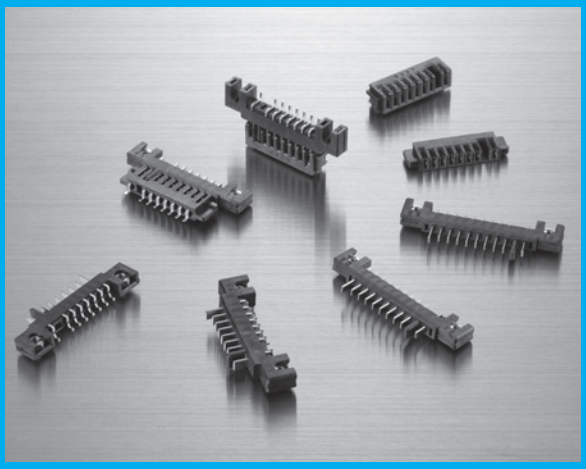

FEATURES

- 2 piece type with a highly reliable connection.
- Hot Swap type available.
- 2mm (0.079") pitch connector.
- Horizontal and Vertical mating combinations.
- Assures 5,000 mating cycles.
- Low profile 2.6mm(0.102''). (GF31 series)

ORDER CODE

GF□□-□□-□□F

① ② ③ ④

*Please order in multiples of the quantity per package.

①	【Type】 Plug **GF01 :** SMT, Standard type **GF02 :** SMT, Reverse type **GF21 :** SMT, Standard type, Low profile **GF22 :** SMT, Reverse type, Low profile Receptacle **GF11 :** SMT **GF12 :** Through hole **GF31 :** SMT, Low profile
②	【Number of contacts】 **08 :** 8pin **10 :** 10pin (GF21, GF22 and GF31 only)
③	【Nut】 (GF01/GF02) **1 :** With Nuts **12 :** Without Nuts 【Tail length】 (GF12) **1 :** 1.5mm(0.059'') **2 :** 2.3mm(0.091'') 【Option】 (GF11/GF21/GF22/GF31) **1**
④	【RoHS】 **F :** RoHS compliant

SPECIFICATIONS

Material and plating	
Insulator material	Glass-filled LCP (UL94V-0), Black
Contact material	Copper alloy
Contact plating	Gold over Nickel
M2 Hexagon Nut	Steel
M2 Hexagon Nut plating	Nickel

Electrical Characteristics	
Current rating	[GF0□ X GF1□] 7A per contact (2 contacts only) 0.5A per contact (other contact) [GF2□ X GF1□/31]5A per contact (2 contacts only) 0.5A per contact (other contact)
Current voltage	30V DC
Contact resistance	20mΩ max.
Dielectric withstanding voltage	650V AC for 1 minute
Insulation resistance	500MΩ min. at 500V DC
Operating temperature	-55°C to +85°C

GF Series Mating Matrix

		Receptacle Connector		
		GF11-08-1F	GF12-08-□F	GF31-□□-1F(Low profile)
Plug Connector	GF01-08-1F	Horizontal / Vertical	Horizontal / Vertical	No
	GF01-08-12F	Horizontal / Vertical	Horizontal / Vertical	No
	GF02-08-1F	Horizontal / Vertical	Horizontal / Vertical	No
	GF02-08-12F	Horizontal / Vertical	Horizontal / Vertical	No
	GF21-□□-1F(Low profile)	Horizontal	Horizontal	Horizontal
	GF22-□□-1F(Low profile)	Horizontal	Horizontal	Horizontal

Mating Drawing

Unit : mm(inch)

◆Horizontal Mating

Plug : GF01-08-1□F
Receptacle : GF1□-08-□F

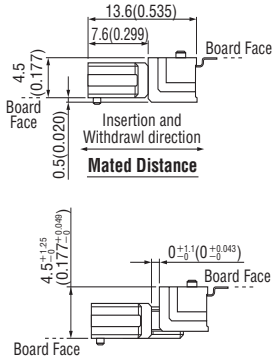

Effective Contact Displacement Range

Plug : GF02-08-1□F
Receptacle : GF1□-08-□F

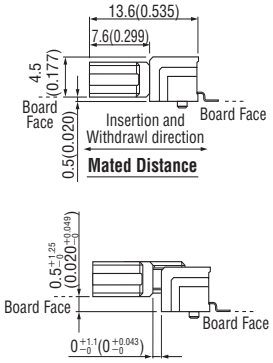

Effective Contact Displacement Range

Plug : GF21-□□-1F
Receptacle : GF31-□□-1F

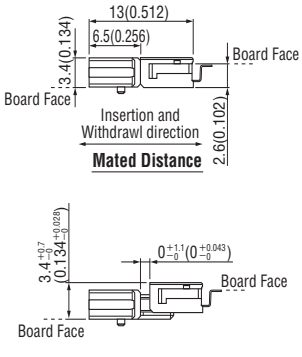

Effective Contact Displacement Range

Plug : GF22-□□-1F
Receptacle : GF31-□□-1F

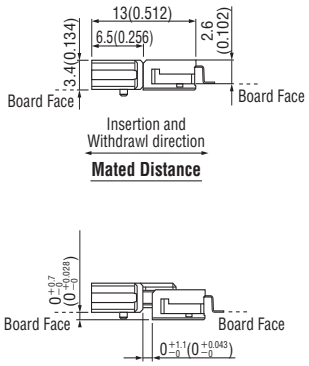

Effective Contact Displacement Range

◆Vertical Mating

Plug : GF01-08-1□F
Receptacle : GF1□-08-□F

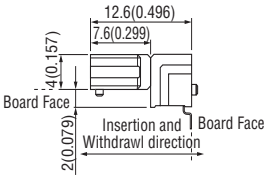

Mated Distance

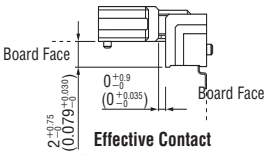

Effective Contact Displacement Range

Plug : GF02-08-1□F
Receptacle : GF1□-08-□F

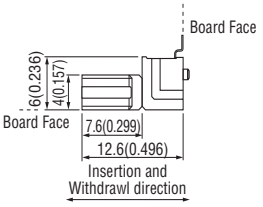

Mated Distance

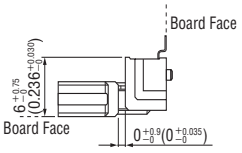

Effective Contact Displacement Range

GF01-08-1F (Plug, SMT, With nuts)

Unit : mm(inch)

Printed Circuit Board Layout (Component Side View)

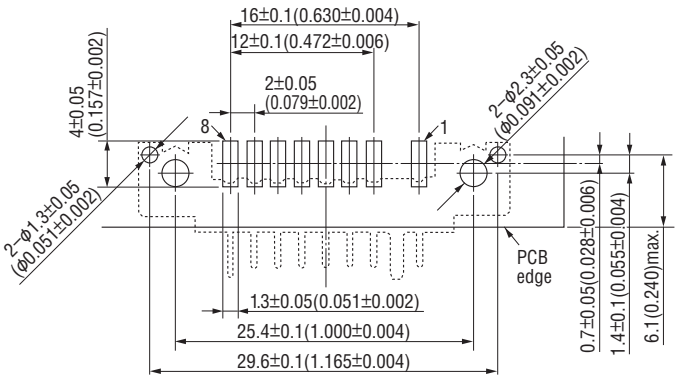

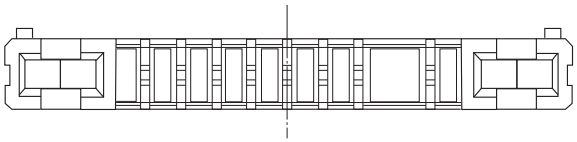

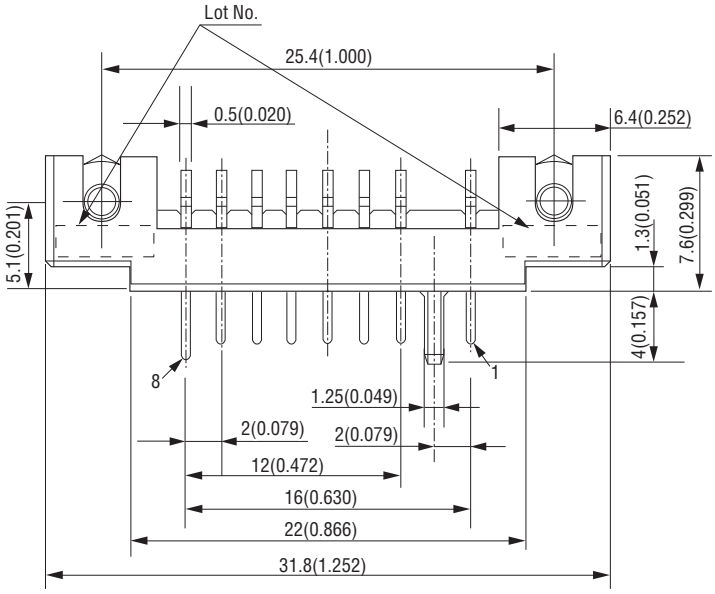

X-X′Cross Section

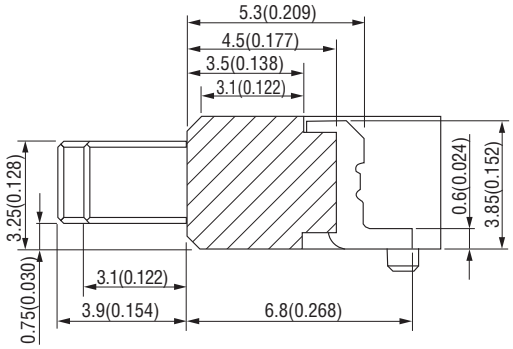

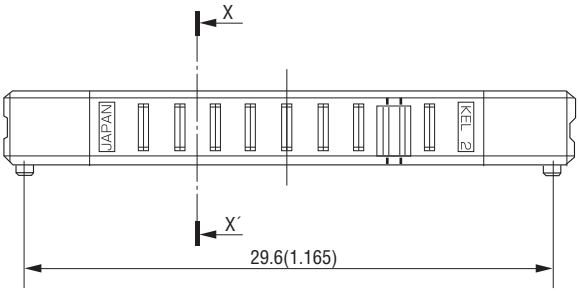

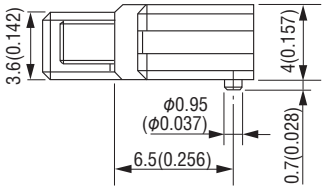

Packaging style
Embossed tape

Product Table

No. of contacts	Part Number	Number of packaging
8	GF01-08-1F	500

GF01-08-12F (Plug, SMT, Without nuts)

Unit : mm(inch)

Printed Circuit Board Layout (Component Side View)

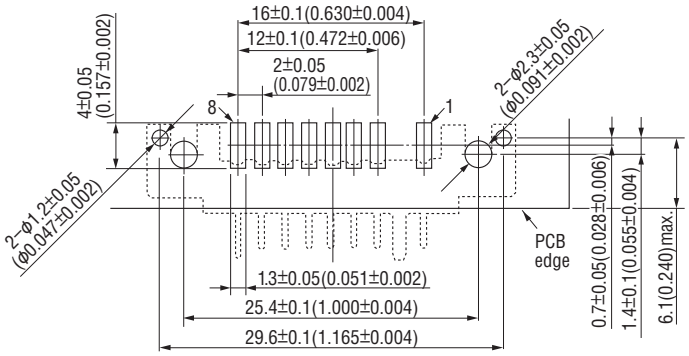

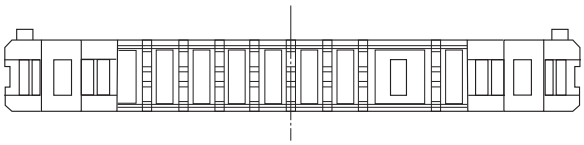

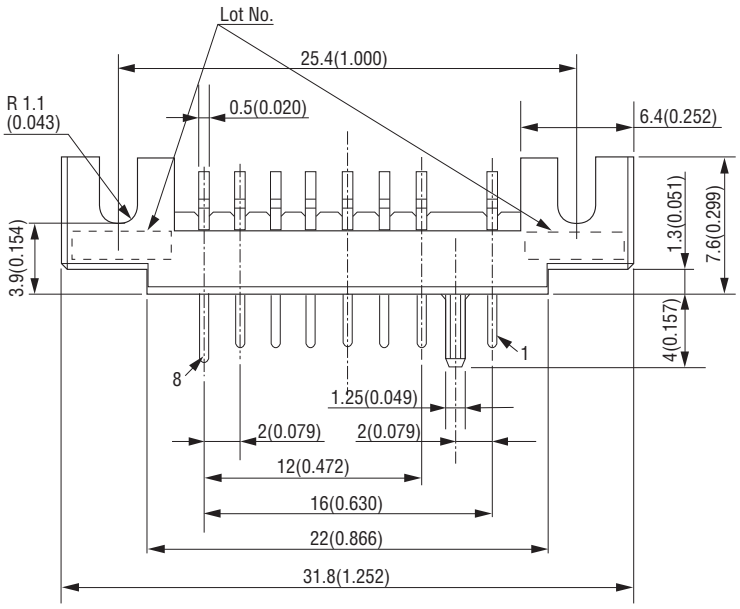

X-X′Cross Section

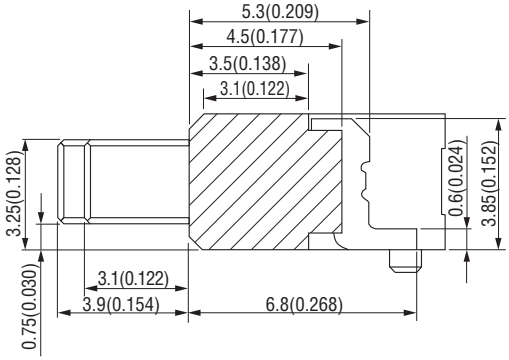

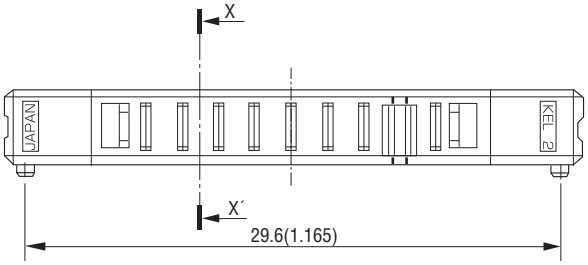

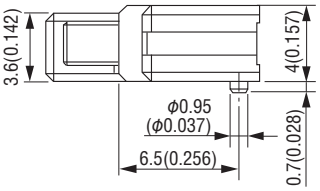

Packaging style
Embossed tape

Product Table

No. of contacts	Part Number	Number of packaging
8	GF01-08-12F	500

GF02-08-1F (Plug, SMT, Reverse type, With nuts)

Unit : mm(inch)

Printed Circuit Board Layout (Component Side View)

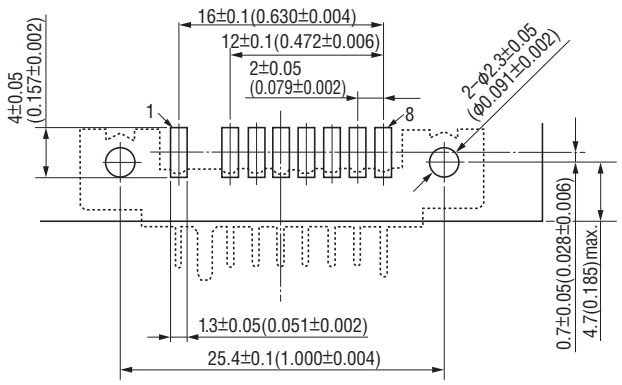

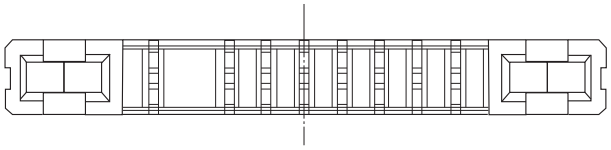

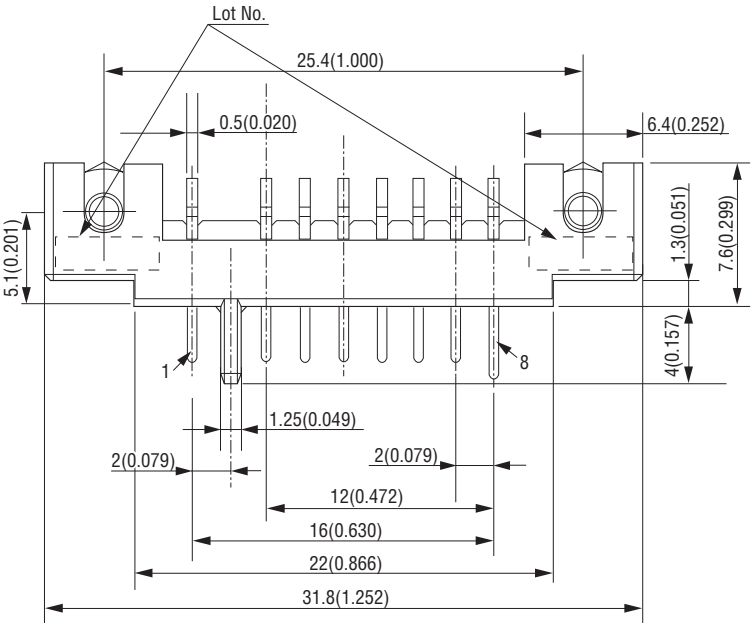

X-X′Cross Section

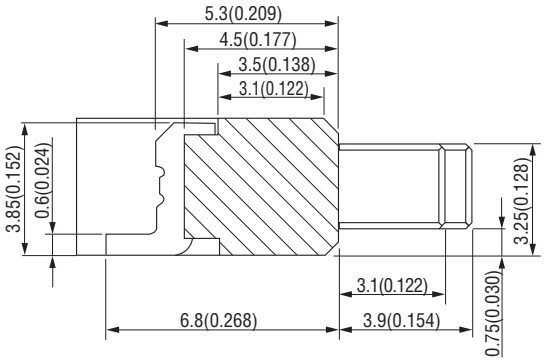

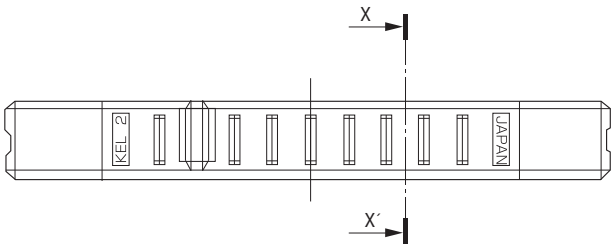

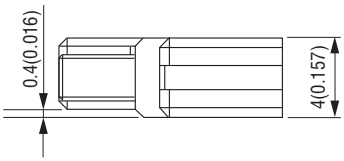

Packaging style
Tray

Product Table

No. of contacts	Part Number	Number of packaging
8	GF02-08-1F	50

GF02-08-12F (Plug, SMT, Reverse type, Without nuts)

Unit : mm(inch)

Printed Circuit Board Layout (Component Side View)

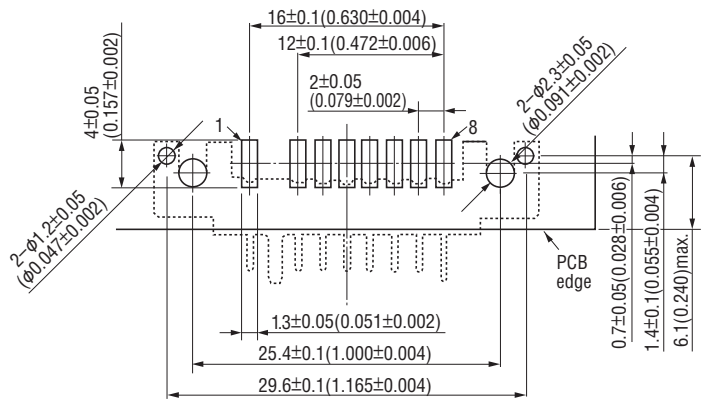

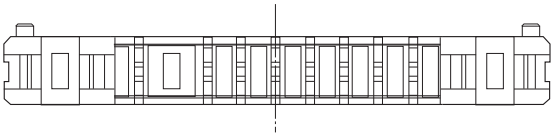

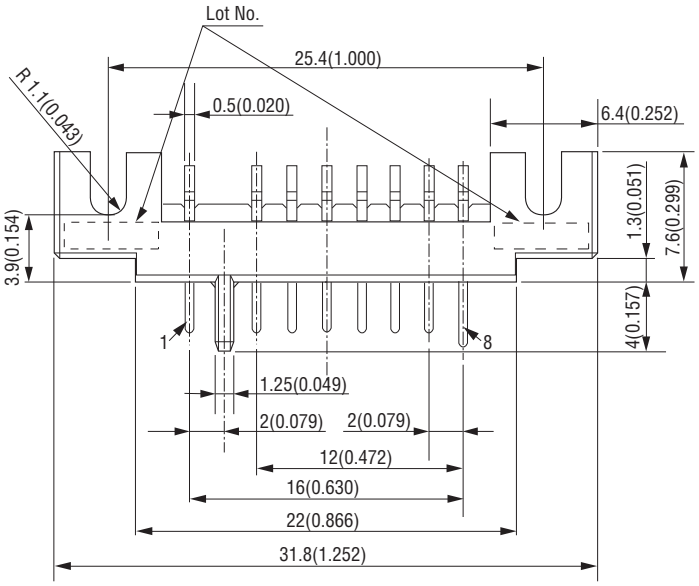

X-X′Cross Section

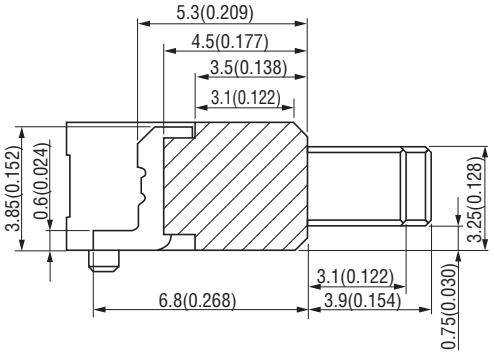

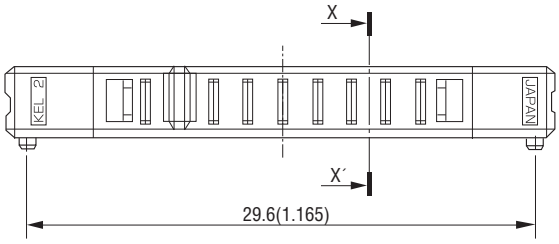

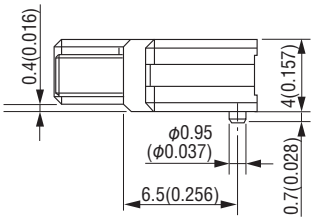

Packaging style
Embossed tape

Product Table

No. of contacts	Part Number	Number of packaging
8	GF02-08-12F	500

GF11-08-1F (Receptacle, SMT)

Unit : mm(inch)

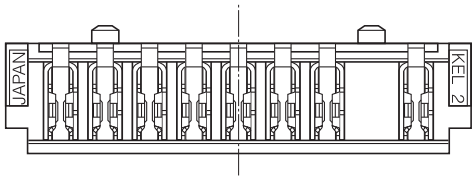

Printed Circuit Board Layout (Component Side View)

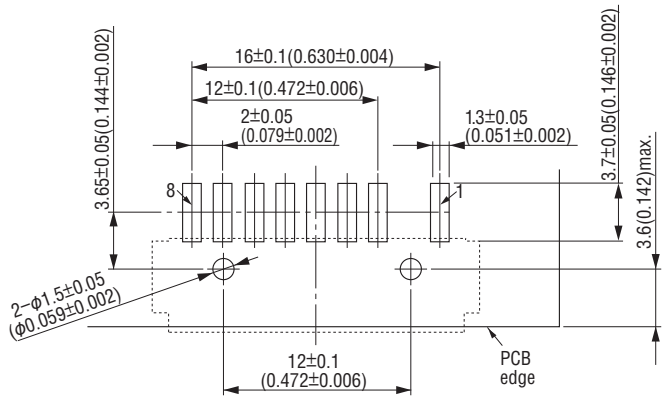

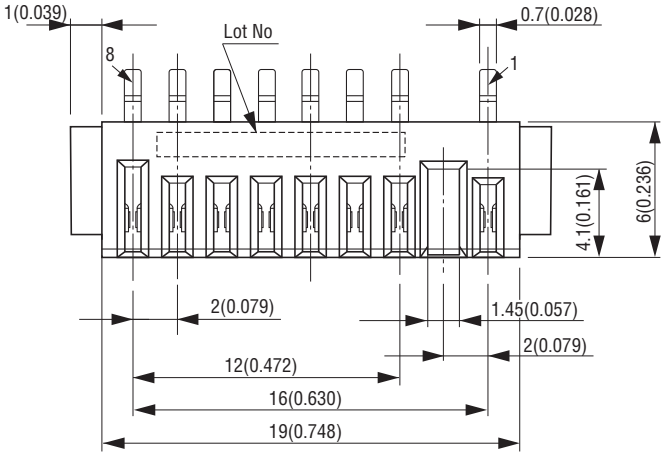

X-X′Cross Section

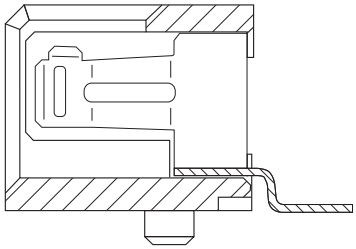

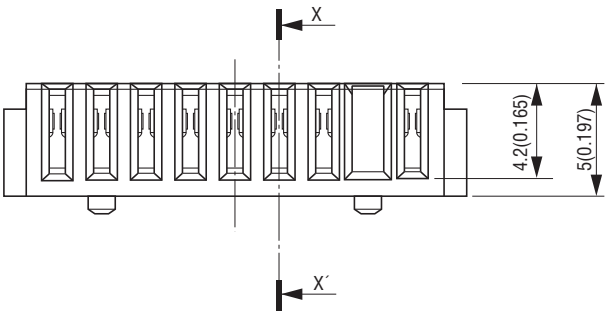

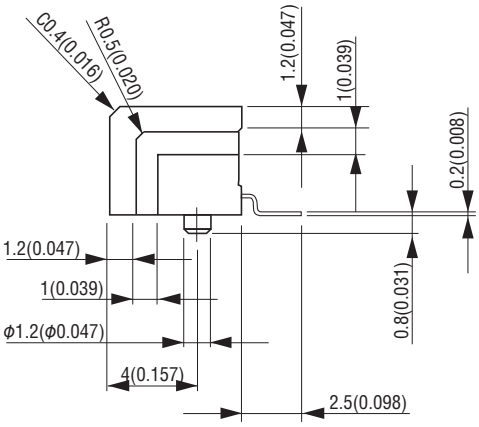

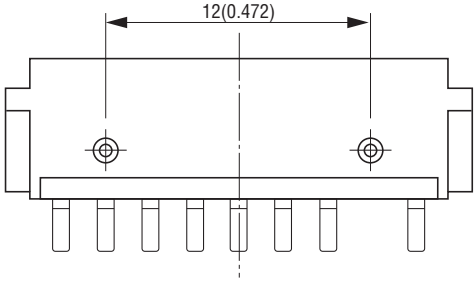

Packaging style
Tray

Product Table

No. of contacts	Part Number	Number of packaging
8	GF11-08-1F	90

GF12-08-□F (Receptacle, Through hole)

Unit : mm(inch)

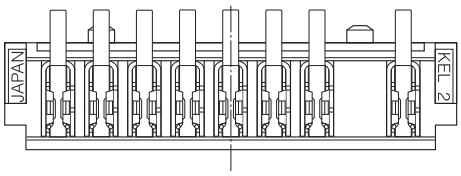

Printed Circuit Board Layout (Component Side View)

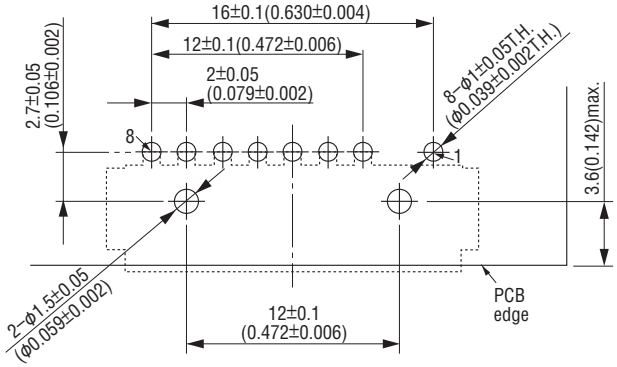

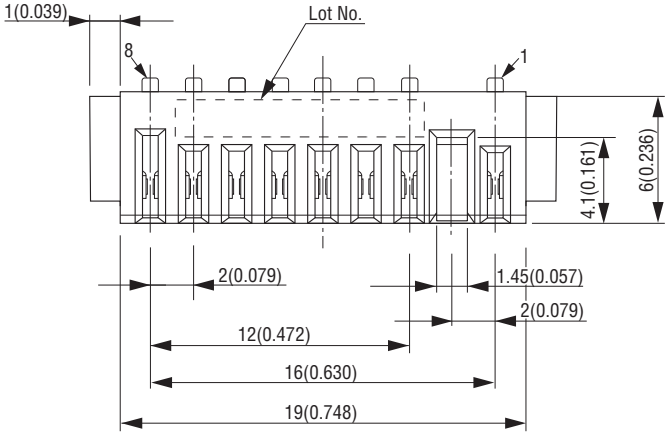

X-X′Cross Section

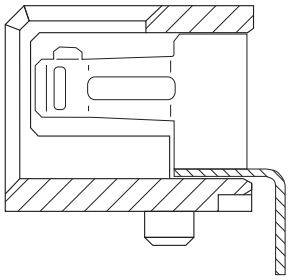

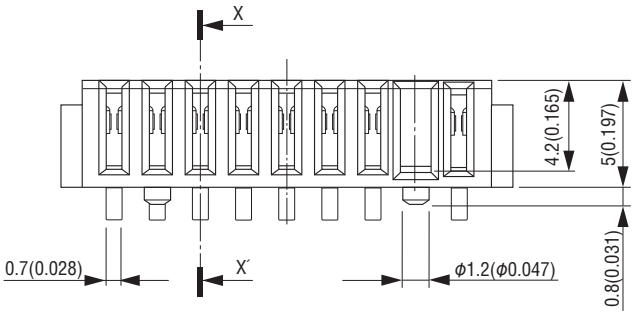

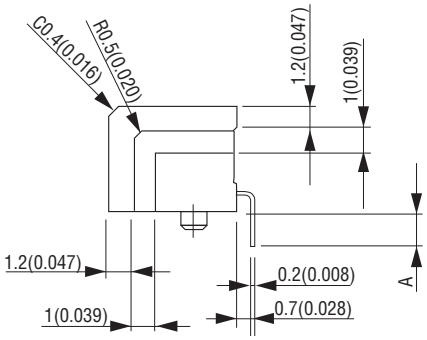

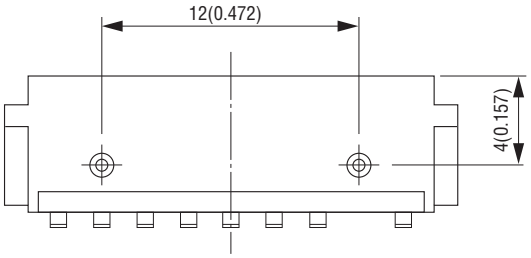

Packaging style
Tray

Product Table / Dimensions

No. of contacts	Part Number	A	Number of packaging
8	GF12-08-1F	1.5 (0.059)	90
8	GF12-08-2F	2.3 (0.091)	90

GF21-□□-1F (Plug, SMT, Low profile)

Unit : mm(inch)

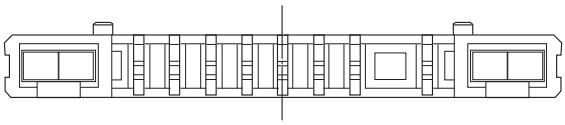

Printed Circuit Board Layout (Component Side View)

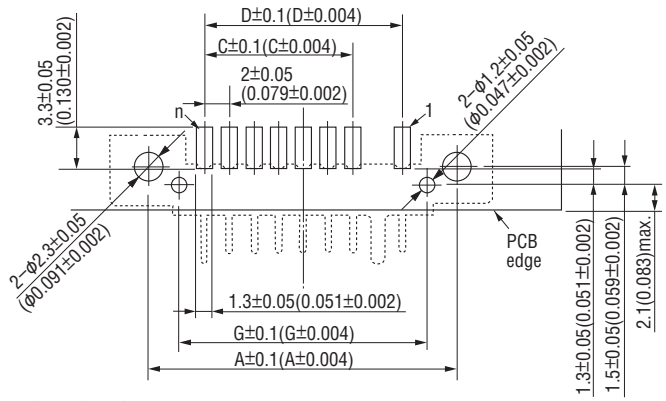

''n'' is number of contacts.

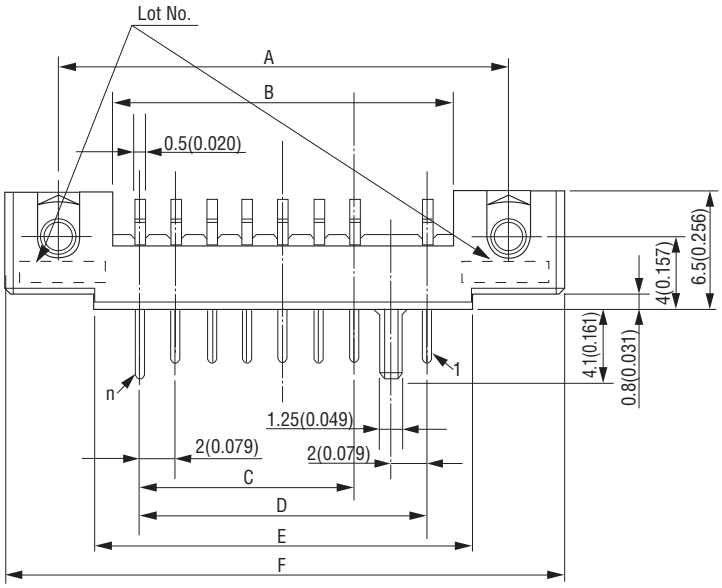

X-X′Cross Section

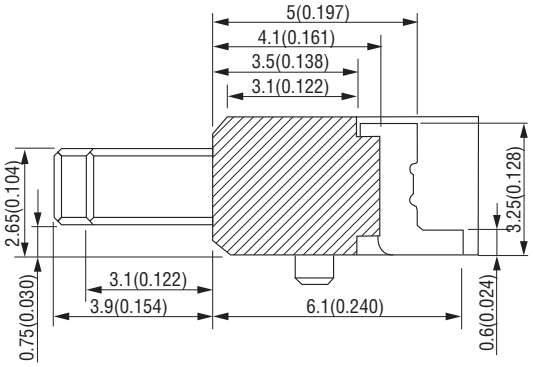

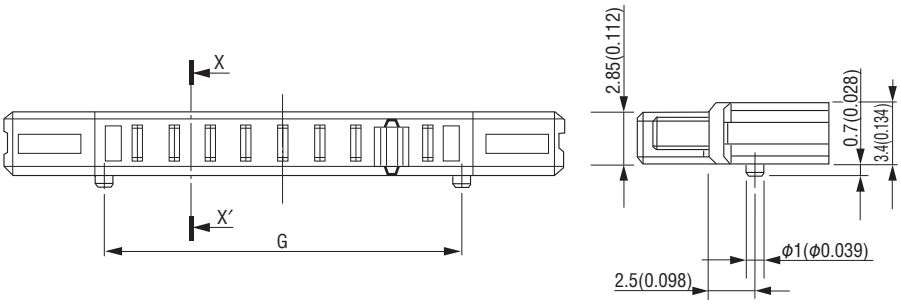

Packaging style
Tray

Product Table / Dimensions

No. of contacts	Part Number	A	B	C	D	E	F	G	Number of packaging
8	GF21-08-1F	25.0 (0.984)	19.0 (0.748)	12.0 (0.472)	16.0 (0.630)	21.0 (0.827)	31.0 (1.220)	20.0 (0.787)	32
10	GF21-10-1F	29.0 (1.142)	23.0 (0.906)	16.0 (0.630)	20.0 (0.787)	25.0 (0.984)	35.0 (1.378)	24.0 (0.945)	32

GF22-□□-1F (Plug, SMT, Low profile, Reverse type)

Unit : mm(inch)

Printed Circuit Board Layout (Component Side View)

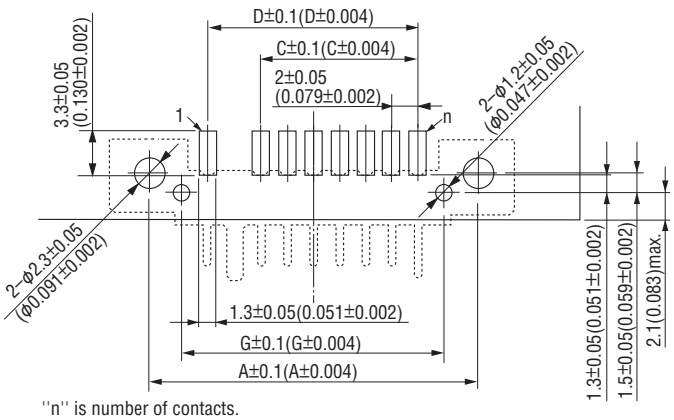

''n'' is number of contacts.

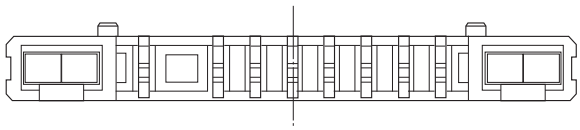

X-X′Cross Section

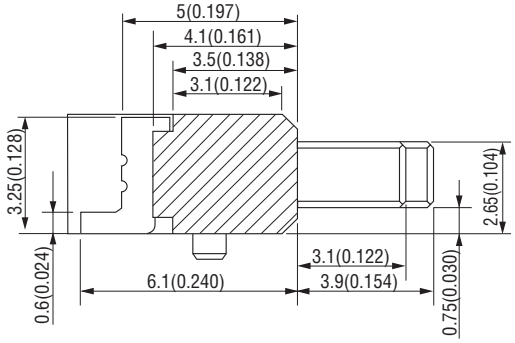

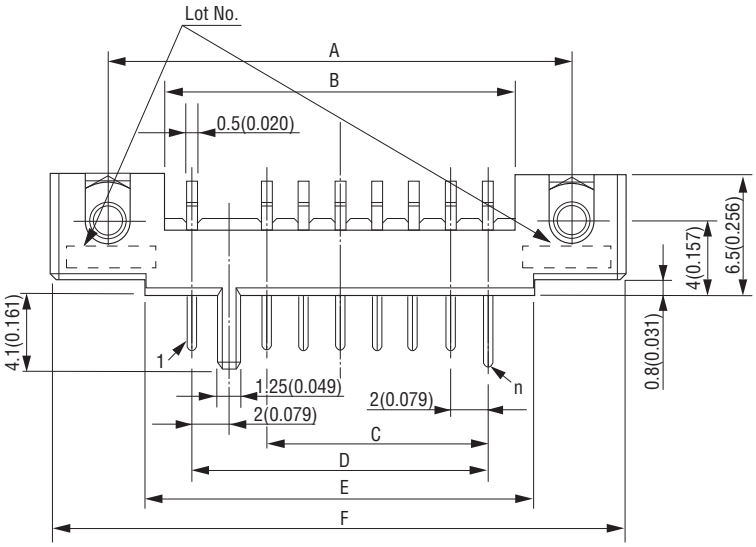

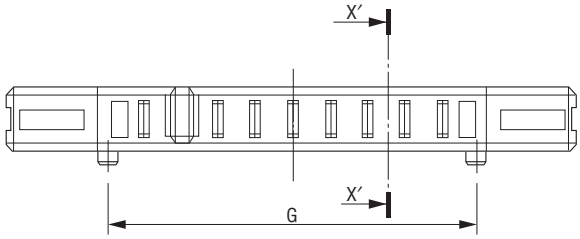

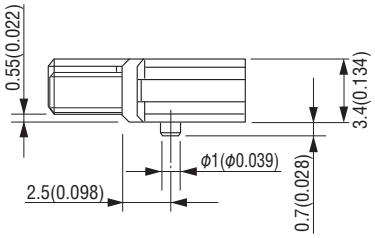

Packaging style
Tray

Product Table / Dimensions

No. of contacts	Part Number	A	B	C	D	E	F	G	Number of packaging
8	GF22-08-1F	25.0 (0.984)	19.0 (0.748)	12.0 (0.472)	16.0 (0.630)	21.0 (0.827)	31.0 (1.220)	20.0 (0.787)	32
10	GF22-10-1F	29.0 (1.142)	23.0 (0.906)	16.0 (0.630)	20.0 (0.787)	25.0 (0.984)	35.0 (1.378)	24.0 (0.945)	32

GF31-□□-1F (Receptacle, SMT, Low profile)

Unit : mm(inch)

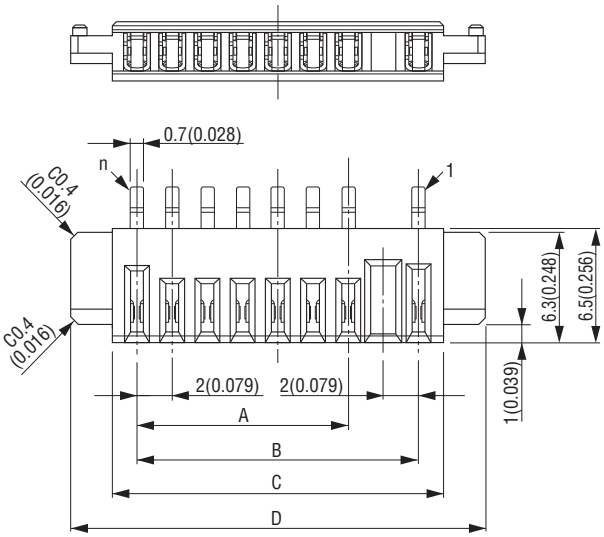

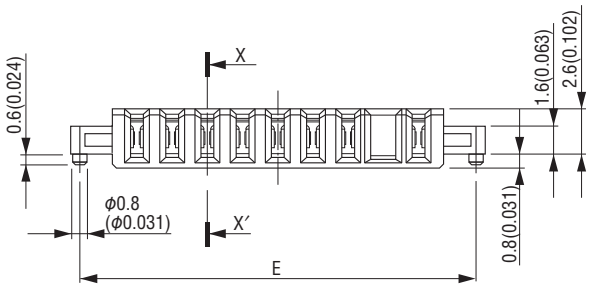

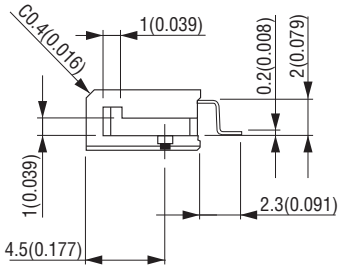

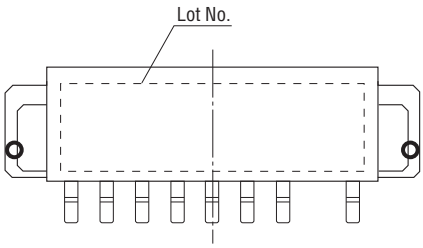

X-X′Cross Section

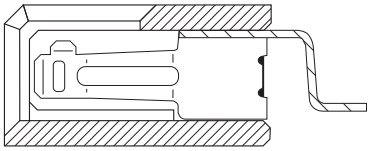

Printed Circuit Board Layout (Component Side View)

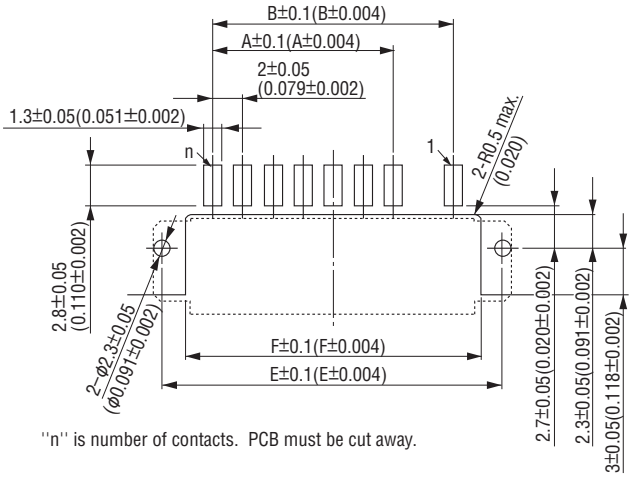

''n'' is number of contacts. PCB must be cut away.

Packaging style
Tray

Product Table / Dimensions

No. of contacts	Part Number	A	B	C	D	E	F	Number of packaging
8	GF31-08-1F	12.0 (0.472)	16.0 (0.630)	18.8 (0.740)	23.5 (0.925)	22.5 (0.886)	19.5 (0.768)	40
10	GF31-10-1F	16.0 (1.630)	20.0 (0.787	22.8 (0.898)	27.5 (1.083)	26.5 (1.043)	23.5 (0.925)	40

Application Notes

In the selection of the connector, please clarify the conditions of the application to be used and the use environment. Also, please understand the features of KEL connector correctly. In order to satisfy the performance of the connector and to use it in the best condition, please be sure to check the following notes before your designing.

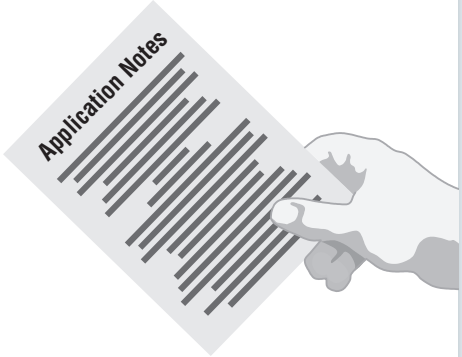

1. PURPOSE OF USE AND APPLICATION

Please select a connector after checking the features, application information and specifications so that the connector will be used according to its intended purpose.
If proper intended usage is ignored, or the connector is applied for a use other than its designed application, full performance to specification cannot be insured and performance features will be altered. In cases where connectors are used in products which interface directly with human life; such as automobiles and medical equipment, etc., please consult with your local KEL sales office. Mating with connectors of other manufacturers is not guaranteed. If you intend to mate a KEL connector with one of those, ensure to either perform a mating test yourself or consult with your local KEL sales office even when the pitch and dimensions of the connector correspond to the KEL products. Before you purchase any of KEL products, we need your agreement on our delivery specifications. If there are any discrepancies between the descriptions in a product catalog and the delivery specification, the latter shall prevail.

2.ENVIRONMENT

Dust : Dust may cause insufficient contact. Countermeasures in extremely dusty conditions are required.

Humidity : Extremely humid conditions can alter insulation, and induce a short circuit. It is required that connectors not be used in extreme humidity and condensing applications.

Temperature : It is required that connectors be applied within specified temperature ranges. Contact resistance can be effected.

3. SOLDERING

Do not solder mating connectors together. Performance characteristics and specifications will be altered.
The connector should be mounted with reference to the soldering and reflow conditions provided by KEL.
Make sure that flux would not adhere to connector contacts during soldering. The contacts contaminated with flux could result in poor electrical contact performance. The flux on the contacts, if any, must be cleaned before using the connector.
In the case of mounting an SMT type connector, failure of assembly may be caused depending on the amount of solder (thickness and area) used. If you have any questions, please feel free to consult with your local KEL sales office.
Soldering of a connector could cause damage; therefore, please ensure to properly control the solder and soldering iron temperatures during the soldering process.

DIP Soldering (Through Hole)

It is recommended that connectors be soldered at 250±5℃ for 5 seconds or less.

Soldering by Hand

It is recommended that soldering is done at 350°C for 3 seconds or less.

* Recommended temperature and time for a DIP/hand soldering operation vary depending on product specifications and conditions. Please contact your local KEL sales office in advance for more information.

Reflow Soldering(SMT)

Use reflow soldering for surface mount connectors. Reflow profile for each connector is specified at the end of its respective catalog. Some parameters of a connector, such as its reflow temperature condition and metal mask thickness, may differ depending on the conditions of the product or printed circuit board. Before you start a reflow process, make sure to contact your local KEL sales office. Flux should be applied directly to a PCB, avoiding its application to a connector.

The connectors for DIP soldering require cleaning. If you prefer soldering without cleaning, use an SMT type connector.
If you use a combination of flow and reflow soldering processes, make sure that no flux would be attached to an SMT connector during the flux application of the flow process.
In the case of a DIP type connector, flux should be applied directly to a PCB, avoiding its application to a connector.
When spray flux is used, make sure that no flux would be attached to a connector by way of, for example, masking it.
We offer connectors on which wicking flux preventing agent has been applied. Please feel free to consult with your local KEL sales office for more information.
Make sure that flux does not reach connector contacts using a proper DIP condition (proper amount of flux).
If it does, ensure to clean the contacts before using the connector.

4.HANDLING OF CONNECTORS

To prevent contacts of a connector from being damaged due to twisted insertion, try to avoid an angled mating and keep the insertion as straight as possible.
While handling the connector, make sure not to touch the contact area or tail area of the contact.
Bent or contaminated contacts could cause reduced electrical performance.
Except for some products designed for hot swap, turn the power off before inserting/withdrawing a connector.
Every connector has specific tolerance for the dimensions listed below. Please check the information before using your connector.

1) Allowable mating misalignment (in X and Y directions)
2) Inclination angle during insertion and withdrawal
3) Gap after mating

For details of the tolerance for the dimensions and angle, please contact your local KEL sales office in advance.

5.CAUTION ON IC CONNECTORS

The IC connector you intend to use may not be applicable, depending on dimensions of an IC package and plating specifications. Make sure to contact your local KEL sales office for the following information.

1) Package dimension
2) Plating specifications

Also, ensure that an IC package is inserted and removed, using a special tools recommended by KEL and following its operating instructions. Insertion/remove using other tools could result in damage or deformation of the package, which may impair its contact reliability.

6.CLEANING

Some of our connectors have a special surface treatment on the contacts to enhance anti-corrosion features. This surface treatment may diminish slightly in the cleaning of the connector. Contaminated cleaning liquids can also leave a film of contamination on connector contacts. Cleaning liquids must be applied carefully and removed completely.

◆ Care must be taken to remove all water, alcohol, cleaning fluids, etc. from connectors.
Proper consideration must be given to devising drying methods.
Positioning connectors vertically for drying is one example.

◆ If boards cannot be cleaned, be careful with flux wicking into contact area.

◆ Please do not use petroleum based solvents and lubricants on connectors.

◆ Sufficient care must be given to cleaning liquids and methods to make sure that part markings are not obliterated and insulators do not break or melt.

◆ Do not use this group of insulator materials with the listed solvents.

RESIN
◆ Diallyl Phthalate ◆ Polycarbonate
◆ Polybutylene Terephthalate
◆ Polyphenylene Sulfide
◆ Liquid Crystal Polymer
◆ Polyether sulfone ◆ Nylon

SOLVENT
◆ Thinner ◆ Ethyl Alcohol ◆ Benzine
◆ Freon ◆ Carbon Tetrachloride
◆ Chlorothene

7.INSULATION DISPLACEMENT CONNECTION (IDC) AND CRIMPING OF HARNESS

Ensure that a harness is connected by IDC or crimping, using a special tool recommended by KEL and following its operating instructions. The connection using other tool could result in damage or deformation of the harness, which may impair its contact reliability.
We can also supply our connectors as harness assemblies, in which cables are IDC, crimped, or soldered to the connectors.

8.PLATING OF CONTACTS

Gold Plating

Our gold plating is mainly used for the finish of the contact mating area.
Flash plating (0.05μm [2μ"] or less) is standard plating. The performance of this plating satisfies the specification set forth in the catalog. (Some products have different specifications.)
If you have any request for the special plating thickness, please feel free to contact your local KEL sales office.

RoHS

Lately we have been using tin alloy on the contact tail area, but to comply with RoHS, it is changed to gold, pure tin and tin copper. Please refer the catalog for specifications of the products.

* Although plating of the product could have slightly different tone depending on its manufacturing lot, the difference would not affect its product performance.

9.CONNECTOR DAMAGE

Application of an excessive external force to a connector, forcible insertion or withdrawal, a large impact caused by dropping, or pulling its cable could damage the connector. Make sure to avoid such actions.
Insertion/withdrawal of a connector that is not mounted to a PCB could result in damage, deformation of contact, etc. Make sure to avoid such actions. Furthermore, supporting a PCB solely by a connector could damage the connector; therefore, another measure to secure the board other than a connector must be provided.
Be careful not to directly stack PCB while connectors are mounted on them or carry a PCB while connectors are mated. Such an action would impose a burden to the connectors, resulting in damage or a defective condition.
When the connector is stored without connection to any component, please use the packaging material supplied with it to prevent it from receiving external forces directly.

10.JIGS AND TOOLS

Make sure to use the jigs and tools recommended by KEL to insert/withdraw an IC package and to connect a harness by IDC or crimping, following the relevant operating instructions.
Do not use any jigs or tools other than those recommended by KEL. If you need to use other ones, consult with your local KEL sales office in advance.

11.RELIABILITY TESTING

We run reliability tests on our products in accordance with certain standards, such as JIS, MIL, and UL, depending on the product.

(Test Items)

◆ Insulation Resistance ◆ Dielectric Withstanding Voltage ◆ Contact Resistance ◆ Vibration ◆ Shock
◆ Salt Spray ◆ Sulfur dioxide test ◆ Hydrogen sulfide test ◆ High-temperature exposure test
◆ Connector and Contact Insertion and Withdrawal Force ◆ Thermal Shock ◆ Temperature Range
◆ Current capacity ◆ Life test ◆ Humidity test

12.OTHER CONSIDERATIONS

◆ Until the time of actual use, the product should be stored in the supplied packaging material to prevent it from receiving external forces directly.

◆ Please store the product under recommended storage conditions. If it has not been kept under such conditions, make sure to visually inspect it and check its performance (e.g. wettability) before actually using it.

◆ Clean PCB contact area prior to insertion and soldering.

◆ Please do not touch the terminals or contacts. It may cause corrosion and deformation of contacts.

◆ Please do not depress contacts with probes during circuit check.

◆ For Printed Circuit Board Layout, please contact your local KEL sales office in advance.

◆ Except for some products designed for hot swap, turn the power off before inserting/withdrawing a connector.

◆ If you intend to use two connectors next to each other, please fully take into account of the fact that such an arrangement would make an allowable tolerance narrower.

◆ Please investigate tolerance sufficiently when 2 connectors are used on one board. It may be necessary to adjust position.

◆ Please use a card puller when a universal PC card is inserted and/or withdrawn. injury may occur to the hands.

◆ Please take care when handling connectors. Sharp edges are present and can cause injury.

◆ Please do not disengage cable connectors by pulling the cable. This may deteriorate the peforormance of the connector.

◆ To prevent contacts of a connector from being damaged due to twisted insertion, try to avoid an angled mating and keep the insertion as straight as possible.
Inserting or withdrawing a connector while it is angled, as illustrated in Fig. (1), could result in buckling of its contacts and damaged insulator. Make sure to avoid such actions.

Figure (1)

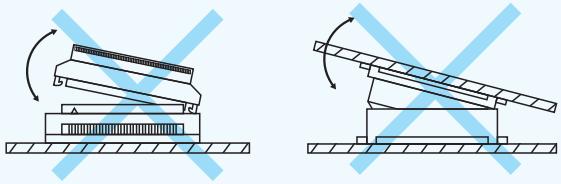

(Board to Cable connector) (Board to Board connector)

◆ If a connector would be inserted by force while it has a mechanism to prevent mis-insertion, it may break.

Before inserting a connector, correct polarity (indicated by, for example, a triangle mark) must be checked, as illustrated in Fig. (2).

Figure (2)

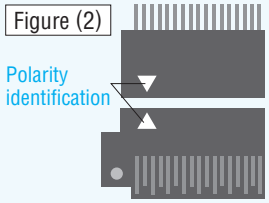

◆ The features of connectors would be impacted by operating and/or storage conditions. The performance level described in this catalog may not be achieved in some cases, depending on the environment where it is used. Accordingly, we recommend that you perform a test in the environment equivalent to actual operating conditions.

◆ The connector shall be treated and disposed of as industrial waste.

◆ Specifications and dimensions are subject to change without notice.

◆ Should you have any questions, please feel free to contact your local KEL sales office.

KEL

APPENDIX RACK PRODUCT

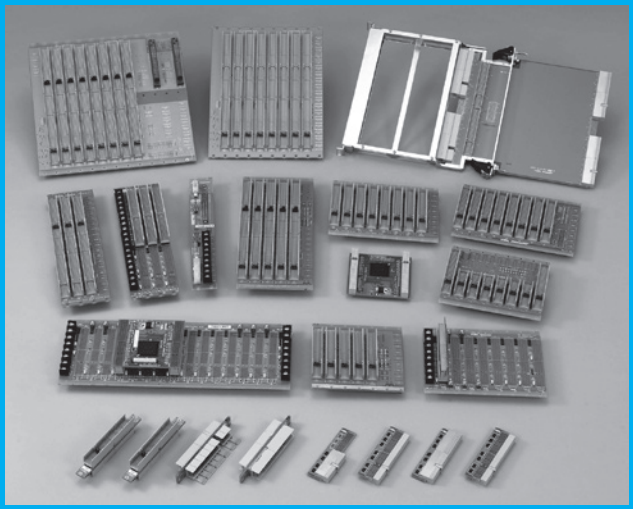

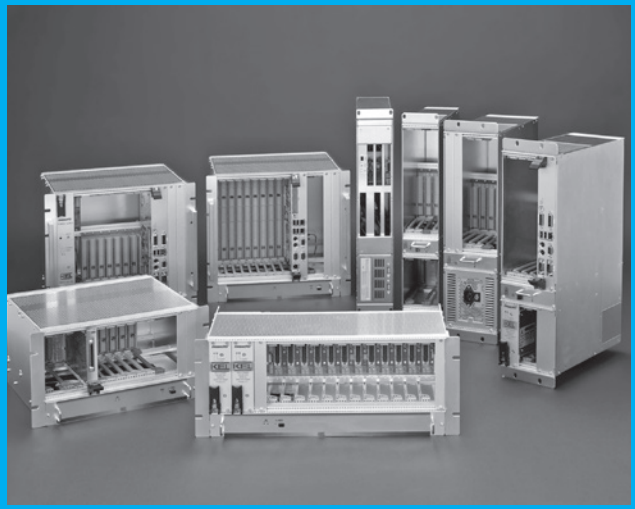

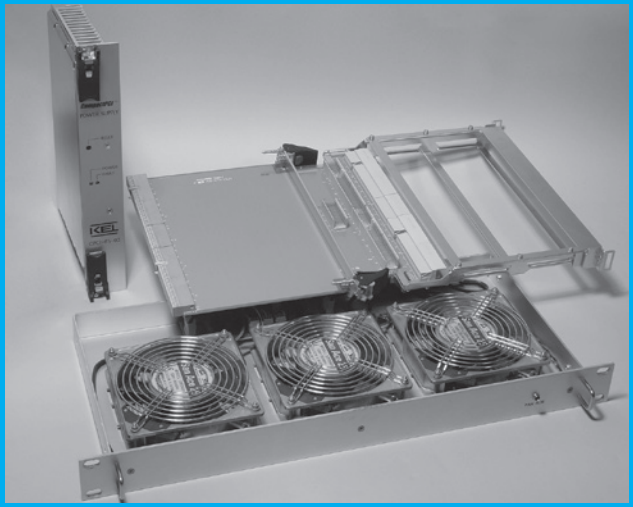

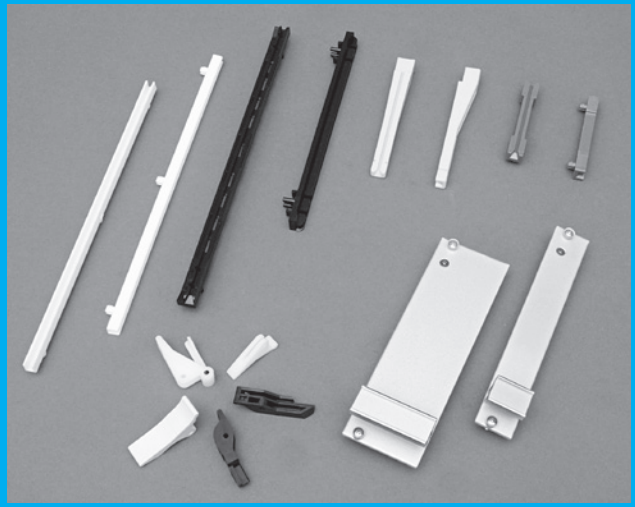

B.C.E. S.r.l. Via Regina Pacis, 54/c - I 41049 Sassuolo (MO)
Tel.: (+39) 0536 811616 - Fax.: (+39) 0536 811500
e-mail: bce@bce.it - Website: www.bce.it

KEL CORPORATION

CompactPCI BUS RACK

IMAGE	SERIES	FEATURES
	CPCIR	◆ System rack correspondant to Backplane. (CompactPCI bus backplane) ◆ KEL can meet requirements for custom-made subracks with the KEL Custom Rack Series product system, which uses the same materials as this product.
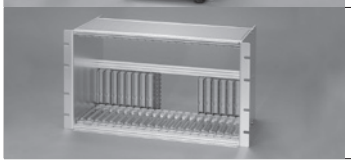	EZCR	◆ Unless a desired subrack is shaped very differently from a standard product, KEL can quickly customize a subrack to the customer's needs through our easy-order system. ◆ KEL can meet requirements for custom-made subracks with the KEL Custom Rack Series product system, which uses the same materials as this product.

VME BUS RACK

IMAGE	SERIES	FEATURES
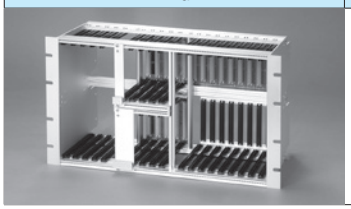	VCR	◆ Conforms to VMEbus standards (IEEE1014). ◆ Supplied as completely assembled system.

ECR series + VME B/P = **VCR series**

IMAGE	SERIES	FEATURES
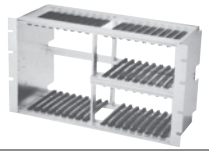	ECR	◆ Compatible with IEC specification 297-3. ◆ Assembled rack is available on request. ◆ Multiple variations. ◆ Easy order system.

CONFORMS to JIS STANDARD

IMAGE	SERIES	FEATURES
	RUGGED	◆ The Connectors of other companies as well as KEL connectors can be attached. ◆ The quality of the material is an aluminium alloy. ◆ The outstanding heat dissipation effect can be acquired.

CONFORMS to EIA STANDARD

IMAGE	SERIES	FEATURES
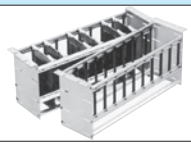	RK	◆ Rack kit for versatile use. ◆ Very easy to assemble.

CompactPCI BUS BACKPLANE

IMAGE	SERIES	FEATURES
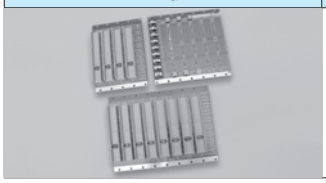	PICMG2.0R3.0 Compliant Backplane CPCI-□S-□-R3.0II-3U-F	◆ Conforms to PICMG2.0R3.0 standards. ◆ 4, 6 and 8 slots type for 3U. ◆ 64bit/32bit jumper switch is mounted. ◆ 66MHz/33MHz system jumper switch is mounted.

CompactPCI BUS BACKPLANE

IMAGE	SERIES	FEATURES
	PICMG2.0R3.0 Compliant Backplane CPCI-3S-R-R3.0-3U-F	◆ Conforms to PICMG2.0R3.0 standards. ◆ 3 slots type for 3U. ◆ 64bit/32bit jumper switch is mounted. ◆ 66MHz/33MHz system jumper switch is mounted.
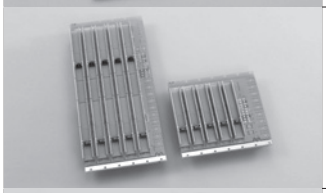	PICMG2.0R3.0 Compliant Backplane CPCI-5S-R-R3.0-□U-F	◆ Conforms to PICMG2.0R3.0 standards. ◆ 5 slots type for 3U and 6U. ◆ Fitted with a connector for a power supply. ◆ 64bit/32bit jumper switch is mounted. ◆ 64MHz/32MHz system jumper switch is mounted.
	PICMG2.0R3.0 Compliant Backplane CPCI-2S-R-R3.0II-VA-F	◆ Conforms to PICMG2.0R3.0 standards. ◆ 2 slots type for 3U. ◆ Fitted with a connector for a power supply. ◆ 64bit/32bit jumper switch is mounted. ◆ 66MHz/33MHz system jumper switch is mounted.
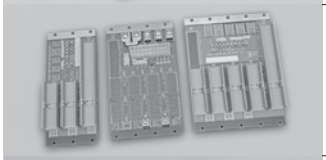	PICMG2.0R3.0 Compliant Backplane(32bit exclusive use) CPCI-□S-R-R3.0-VA-F	◆ Conforms to PICMG2.0R3.0 standards. ◆ 3, 4, 5 and 6 slots type for 3U. ◆ 32bit exclusive use. ◆ 66MHz/33MHz system jumper switch is mounted.
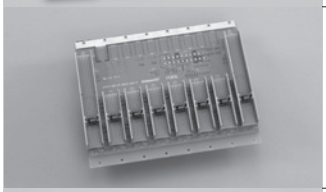	PICMG2.0R3.0 Compliant Backplane VA Type CPCI-8S-R-R3.0-VA-□-F	◆ Conforms to PICMG2.0R3.0 standards. ◆ The total cost is reduced by limiting V(I/O) to +5V fixation and a 32-bit product. ◆ If power supply is limited to an ATX specification, the cost can be reduced further.
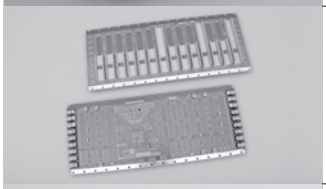	PICMG2.0R3.0 Compliant Bridge Board Equipped Backplane CPCI-B-14S-R-R3.0II-□□-3U-F	◆ Conforms to PICMG2.0R3.0 standards. ◆ Backplane is designed for use with bridge boards.
	PICMG2.0R3.0 Compliant Slot-in Power Supply Compatible 6U Backplane CPCI-P-8S-R-F	◆ Designed for use with the CPCI-PS-02-F slot-in power supply unit. ◆ Two ATX power supply connectors are fitted. ◆ Sensing point is located near the center of the board. ◆ Can accommodate parallel operation of two plug-in power supply units.
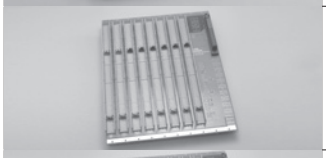	PICMG2.16R1.0 Compliant Packet Switching Backplane CPCI-PSB-8S-R-D-F	◆ Conforms to PICMG2.16R1.0 and PICMG2.11R1.0 standards. ◆ Specification which adapted the Ethernet standard to P3 connector on the backplane. ◆ Packet switching structure.
	PICMG2.17R1.0 Compliant Star Fablic Backplane CPCI-SFB-10S-R-CD-F	◆ Conforms to PICMG2.17R1.0 and PICMG2.11R1.0 standards. ◆ Specification which adapted the LVDS standard to P3 connector on a backplane. ◆ Star fablic structure.
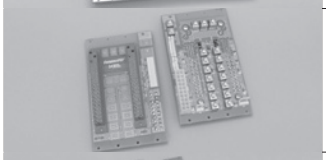	PICMG2.11R1.0 Compliant Slot-in Power Supply Compatible Backplane CPCI-P-3U-2S-F	◆ Conforms to PICMG2.11R1.0 standards. ◆ Designed for use with the CPCI-PS-02-F slot-in power supply unit. ◆ For 3U.
	PICMG2.11R1.0 Compliant Slot-in Power Supply Compatible Backplane CPCI-P-6U-1x2S-F	◆ Conforms to PICMG2.11R1.0 standards. ◆ Designed for use with the CPCI-PS-02-F slot-in power supply unit. ◆ For 6U.

KEL CORPORATION

CompactPCI BUS BACKPLANE

IMAGE	SERIES	FEATURES
	PICMG2.11R1.0 Compliant Slot-in Power Supply Compatible Backplane CPCI-P-MD-F	◆ Conforms to PICMG2.11R1.0 standards. ◆ Designed for use with the CPCI-PS-02-F slot-in power supply unit. ◆ For 6U. ◆ One ATX power supply connectors are fitted.
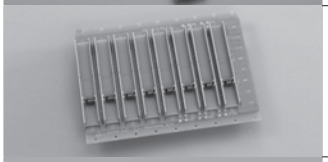	PICMG2.0R2.1 Compliant 3U Backplane CPCI-□S-□-R2.1-F	◆ 3U size. ◆ Wired for 64-bit signaling system. ◆ Five clock routings. ◆ Sensing terminals implemented.
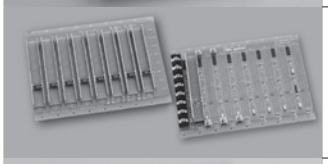	PICMG2.0R2.1 Compliant Termination Implementing Backplane CPCI-8S-□T-R2.1-F	◆ Basic parts of this product are the same as those of the R2.1-compliant 3U backplane. ◆ Used for mounting termination boards. ◆ Designed for use with CPCI-TB Series termination board.
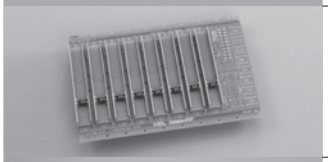	PICMG2.0R2.1 Compliant ATX Power Supply Connector Equipped Backplane CPCI-8S-RA-R2.1-F	◆ Basic parts of this product are the same as those of the R2.1-compliant 3U backplane. ◆ Fitted with a connector for an ATX power supply.
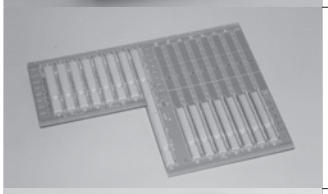	PICMG2.7D0.5 Compliant Dual-Bus Compatible 6U Backplane CPCI-D-16S-6UR-F	◆ Dual-width-slot backplane with built-in bridge board. ◆ Power supply layout for CompactPCI bus A is independent from that of CompactPCI bus B. ◆ Up to 14 peripheral boards can be used.
	PICMG2.1R1.0 Compliant Hot Swap Compatible Backplane CPCI-H-□S-□-□□-F	◆ The backplane is wired for 64-bit signaling. ◆ Seven clock routings (point-to-point) are provided. ◆ Eight-slot backplanes each have a pre-mounted diode array. ◆ Three-level staged pins enable hot swapping.
	PICMG2.5R1.0 Compliant Computer Telephony Compatible 6U Backplane CPCI-C-□S-R-F	◆ Eight-slot backplanes each have a pre-mounted diode array. ◆ A telecommunication power supply pin is provided at P4. ◆ Satisfies the insulation requirements of the specifications.
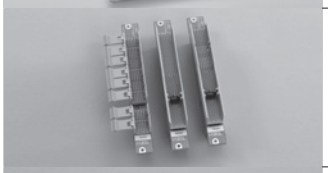	Rear I/O Adapter CPCI-I/O-AD-□□-F	◆ 3.2mm-thick, dual-sided board. ◆ Rows f and z are for GND connection; all other rows are feedthroughs. ◆ The version with a snap latch can be used in a cable-connected configuration.
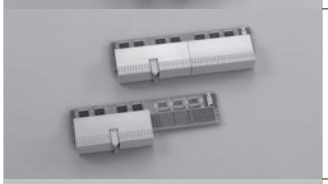	Termination Board CPCI-TB-□□□-F	◆ 1.6mm-thick, four-layer board. ◆ Fitted with a 74S1053 diode array. ◆ Can be used in both 5V and 3.3V signal environments. ◆ 64-bit and 32-bit types are available.
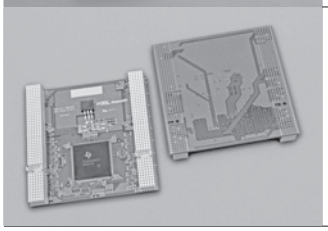	Bridge Board, Palette type (32bit exclusive use) CPCI-B/BII-32-□(AD2□)-F	◆ Primary side of bridge can be assigned to any desired slot by jumper setting. ◆ Can be used with 5V power supplies. ◆ 32bit exclusive use.

VME BUS BACKPLANE

IMAGE	SERIES	FEATURES
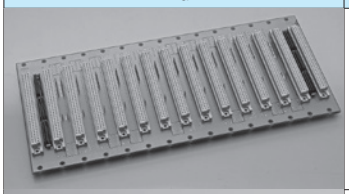	VMEbus Backplane J1 TYPE VME□□S-J1-□□□-M/B-F	◆ Conforms to VMEbus Rev.C ◆ Available for assembly with our ECR/VCR series. ◆ Provides 11 slot versions: 5, 6, 7, 8, 9, 10, 12, 15, 17, 18 and 21 slots. ◆ 8 layer backplane design to improve Cross-talk. ◆ Can set daisy chain jumper switching from any side.
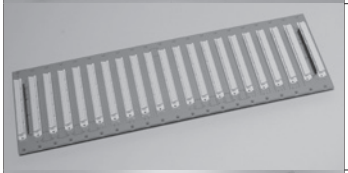	VMEbus Backplane J2 TYPE VME□□S-J2-M/B-F	◆ Conforms to VMEbus Rev.C ◆ Available for assembly with our ECR/VCR series. ◆ Provides 8 slot versions: 3, 5, 7, 9, 10, 12, 15 and 21 slots. ◆ 4 layer backplane design to improve Cross-talk. ◆ Row B is for 32-bit extension wiring, and rows A and C row are for open.
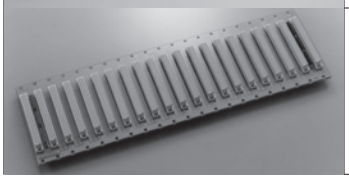	VMEbus Backplane I/O TYPE VME□□S-I/O-M/B-F	◆ Conforms to VMEbus Rev.C ◆ Available for assembly with our ECR/VCR series. ◆ Provides 8 slot versions: 5, 7, 9, 10, 12, 15, 18 and 21 slots. ◆ 8 layer backplane design to improve Cross-talk. ◆ Row B is for 32-bit extension wiring, and rows A and C row are for parallel wiring.

PCI • ISA BUS BACKPLANE

IMAGE	SERIES	FEATURES
	PCI Bus Backplane PCI-4S-F	◆ Conforms to PCI bus standard 4 slot backplane. ◆ The PCI backplane can be used arranging it with KEL's ISA backplane. ◆ It is possible to make a specification change to KEL's ISA backplane without changing the position of a slot.
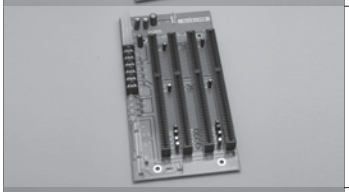	ISA Bus Backplane ISA-4S-F	◆ Conforms to ISA bus standard 4 slot backplane. ◆ The ISA backplane can be used with KEL's PCA backplane. ◆ It is possible to make a specification change to KEL's PCA backplane without changing the position of a slot.
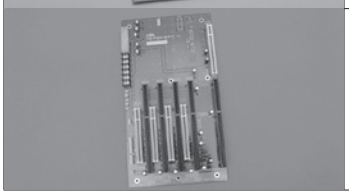	PICMG PCI/ISA Backpleane PIS-P4S4-F	◆ Conforms to PICMG PCI/ISA bus standard 5 slot backplane. ◆ A power supply terminal can be chosen in ATX or Terminal stand. ◆ The bracket attachment is prepared. (Optional)

KEL CORPORATION

POWER SUPPLY UNIT

IMAGE	SERIES	FEATURES
	CompactPCI Rack-Mount-Type 300W/145W Power Supply Unit	◆ Unit can be used in evaluation low-cost-system applications employing ATX-and SFX-specification power supplies. ◆ 3US type can be used in small systems with 2-3 slots. ◆ ATX-specification fan control is possible.

FAN UNIT

IMAGE	SERIES	FEATURES
	FAN Unit	◆ It is attached in the 19 inch rack based on the IEC standard. ◆ Since aluminum material is used, it is light weight and has excellent size accuracy. ◆ Low noise type fan.

EXTENSION BOARD

IMAGE	SERIES	FEATURES
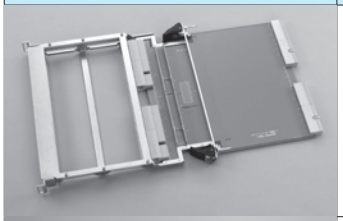	CompactPCI bus Backplane Extension Board	◆ 1.6mm-thick, eight-layer board. ◆ Pattern wiring was made as short as possible taking the stub length of CompactPCI boards into consideration. ◆ Chassis is made of SPCC.
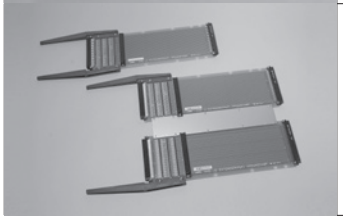	VME bus Backplane Extension Board	◆ 1.6mm-thick, five-layer board. ◆ The object for 3U type and the object for 6U type are available.

CARD PULLER

IMAGE	SERIES	FEATURES
	CRP-03	◆ Material: Polyacetal(UL94HB), White
	CRP-04	◆ Material: Polyacetal(UL94HB), White
	CRP-05L	◆ Material: Glass-filled Nylon 6(UL94V-0), White

CARD PULLER

IMAGE	SERIES	FEATURES
	CRP-05W-F	◆ Material: Glass-filled Nylon 6(UL94V-0), White
	CRP-05M	◆ Material: Glass-filled Nylon 6(UL94V-0), Gray
	CRP-07-LR-F	◆ Material: Glass-filled Nylon 6(UL94V-0), Black

GUIDE RAIL

IMAGE	SERIES	FEATURES
	50-10□□	◆ Guide rail material: Polycarbonate(UL94V-0), Gray ◆ Hook material: Nylon(UL94V-0), Black ◆ Length: 79.9, 118.2, 155.8, 181.4, 239.9mm
	50-40□□	◆ Material: Glass-filled Nylon(UL94HB), Gray ◆ Length: 90, 130, 200mm
	50-60□□	◆ Material: PC/ABS polymer alloy(UL94V-0), Blue ◆ Length: 61.34, 112.1, 137.54, 162.9, 275mm
	50-80□□	◆ Material: PPE(UL94V-0), Black ◆ Length: 151.16, 211.16mm
	50-8030	◆ Material: PPE(UL94V-0), Black ◆ Length: 271.16mm
	50-8410/50-8510	◆ Material: PPE(UL94V-0), Black ◆ Length: 151.16mm
	50-7010□	◆ Material: Polycarbonate(UL94V-2), Blue ◆ Length: 185mm
	50-2032-□□	◆ Material: Nylon 66(UL94V-0), Natural ◆ Length: 203.2mm

FRONT PANEL・FILLER PANEL

IMAGE	SERIES	FEATURES
	□UFP-02	◆ Front panel ◆ Material: A1050PH24(Finish: Alodine after sandblasting)
	□UFP-□□	◆ Filler panel ◆ Material: A1050PH24(Finish: Alodine after sandblasting)

SPACER

IMAGE	SERIES	FEATURES
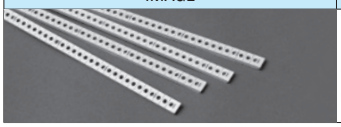	SPACER01	◆ Material: PBT(UL94V-0), Gray

Company Overview

Trade Name
KEL CORPORATION

President
Etsuro Doi

Head Office Address
6-17-7 Nagayama, Tama-shi, Tokyo 206-0025, Japan

Established
July 23, 1962

Total Capital
1,617 Million Yen

Factory
Yamanashi, Nagano

Office
[Japan] Utsunomiya Sales Office Mito Sales Office Nagoya Sales Office Osaka Sales Office [USA] KEL Connectors, Inc. [Taiwan] KEL Taiwan Co., Ltd. [China] KEL (Shanghai) Corporation. [Hong Kong] KEL Electronics (Hong Kong) Ltd. [Germany] KEL Europe GmbH

URL
www.kel.jp

grafiche zanichelli sassuolo

B.C.E. ELECTRONICS

Importation & Distribution
Electronic Components

B.C.E. s.r.l.
Via Regina Pacis, 54/c - 41049 SASSUOLO (MO) Italy
Tel. +39 0536 811.616 r.a. - Fax +39 0536 811.500
www.bce.it - E-mail: bce@bce.it